NEW

CanadianSolar

# TOPBiHiKu7

## N-type Bifacial TOPCon Technology

## 685 W ~ 715 W

## CS7N-685|690|695|700|705|710|715TB-AG

### MORE POWER

715 W — Module power up to 715 W
Module efficiency up to 23.0 %

EXTRA POWER — Up to 85% Power Bifaciality, more power from the back side

Excellent anti-LeTID & anti-PID performance. Low power degradation, high energy yield

Lower temperature coefficient (Pmax): -0.29%/°C, increases energy yield in hot climate

Lower LCOE & system cost

### MORE RELIABLE

Minimizes micro-crack impacts

Heavy snow load up to 5400 Pa, wind load up to 2400 Pa*

**12 Years** — **Enhanced Product Warranty on Materials and Workmanship***

**30 Years** — **Linear Power Performance Warranty***

**1st year power degradation no more than 1%**
**Subsequent annual power degradation no more than 0.4%**

*According to the applicable Canadian Solar Limited Warranty Statement.

### MANAGEMENT SYSTEM CERTIFICATES*

ISO 9001: 2015 / Quality management system
ISO 14001: 2015 / Standards for environmental management system
ISO 45001: 2018 / International standards for occupational health & safety
IEC 62941: 2019 / Photovoltaic module manufacturing quality system

### PRODUCT CERTIFICATES*

IEC 61215 / IEC 61730 / CE / INMETRO / MCS / UKCA / CGC
CEC listed (US California) / FSEC (US Florida)
UL 61730 / IEC 61701 / IEC 62716 / IEC 60068-2-68
UNI 9177 Reaction to Fire: Class 1 / Take-e-way

* The specific certificates applicable to different module types and markets will vary, and therefore not all of the certifications listed herein will simultaneously apply to the products you order or use. Please contact your local Canadian Solar sales representative to confirm the specific certificates available for your Product and applicable in the regions in which the products will be used.

**CSI Solar Co., Ltd.** is committed to providing high quality solar photovoltaic modules, solar energy and battery storage solutions to customers. The company was recognized as the No. 1 module supplier for quality and performance/price ratio in the IHS Module Customer Insight Survey. Over the past 22 years, it has successfully delivered over 110 GW of premium-quality solar modules across the world.

* For detailed information, please refer to the Installation Manual.

**CSI Solar Co., Ltd.**
199 Lushan Road, SND, Suzhou, Jiangsu, China, 215129, www.csisolar.com, support@csisolar.com

## ENGINEERING DRAWING (mm)

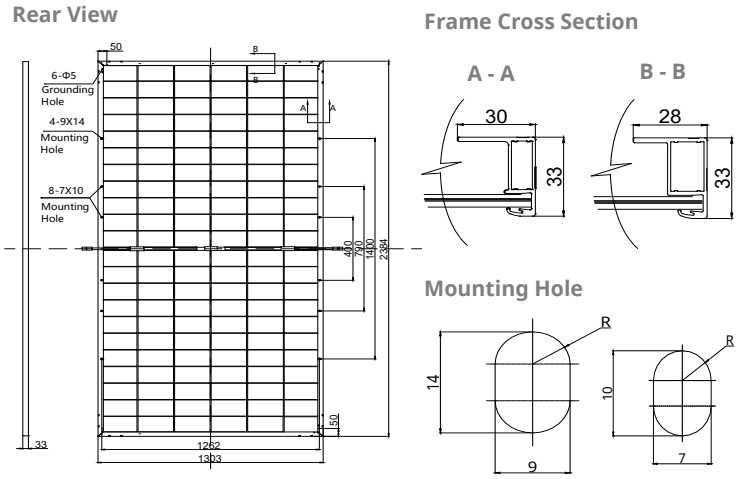


## CS7N-695TB-AG / I-V CURVES

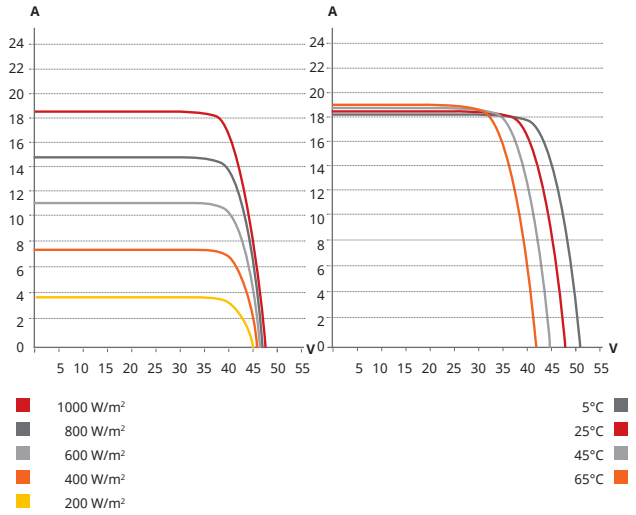


## ELECTRICAL DATA | STC*

| | | Nominal Max. Power (Pmax) | Opt. Operating Voltage (Vmp) | Opt. Operating Current (Imp) | Open Circuit Voltage (Voc) | Short Circuit Current (Isc) | Module Efficiency |
|---|---|---|---|---|---|---|---|
| CS7N-685TB-AG | | 685 W | 39.4 V | 17.39 A | 47.3 V | 18.34 A | 22.1% |
| Bifacial Gain** | 5% | 719 W | 39.4 V | 18.26 A | 47.3 V | 19.26 A | 23.1% |
| | 10% | 754 W | 39.4 V | 19.13 A | 47.3 V | 20.17 A | 24.3% |
| | 20% | 822 W | 39.4 V | 20.87 A | 47.3 V | 22.01 A | 26.5% |
| CS7N-690TB-AG | | 690 W | 39.6 V | 17.43 A | 47.5 V | 18.39 A | 22.2% |
| Bifacial Gain** | 5% | 725 W | 39.6 V | 18.30 A | 47.5 V | 19.31 A | 23.3% |
| | 10% | 759 W | 39.6 V | 19.17 A | 47.5 V | 20.23 A | 24.4% |
| | 20% | 828 W | 39.6 V | 20.92 A | 47.5 V | 22.07 A | 26.7% |
| CS7N-695TB-AG | | 695 W | 39.8 V | 17.47 A | 47.7 V | 18.44 A | 22.4% |
| Bifacial Gain** | 5% | 730 W | 39.8 V | 18.34 A | 47.7 V | 19.36 A | 23.5% |
| | 10% | 765 W | 39.8 V | 19.22 A | 47.7 V | 20.28 A | 24.6% |
| | 20% | 834 W | 39.8 V | 20.96 A | 47.7 V | 22.13 A | 26.8% |
| CS7N-700TB-AG | | 700 W | 40.0 V | 17.51 A | 47.9 V | 18.49 A | 22.5% |
| Bifacial Gain** | 5% | 735 W | 40.0 V | 18.39 A | 47.9 V | 19.41 A | 23.7% |
| | 10% | 770 W | 40.0 V | 19.26 A | 47.9 V | 20.34 A | 24.8% |
| | 20% | 840 W | 40.0 V | 21.01 A | 47.9 V | 22.19 A | 27.0% |
| CS7N-705TB-AG | | 705 W | 40.2 V | 17.55 A | 48.1 V | 18.54 A | 22.7% |
| Bifacial Gain** | 5% | 740 W | 40.2 V | 18.43 A | 48.1 V | 19.47 A | 23.8% |
| | 10% | 776 W | 40.2 V | 19.31 A | 48.1 V | 20.39 A | 25.0% |
| | 20% | 846 W | 40.2 V | 21.06 A | 48.1 V | 22.25 A | 27.2% |
| CS7N-710TB-AG | | 710 W | 40.4 V | 17.59 A | 48.3 V | 18.59 A | 22.9% |
| Bifacial Gain** | 5% | 746 W | 40.4 V | 18.47 A | 48.3 V | 19.52 A | 24.0% |
| | 10% | 781 W | 40.4 V | 19.35 A | 48.3 V | 20.45 A | 25.1% |
| | 20% | 852 W | 40.4 V | 21.11 A | 48.3 V | 22.31 A | 27.4% |
| CS7N-715TB-AG | | 715 W | 40.6 V | 17.63 A | 48.5 V | 18.64 A | 23.0% |
| Bifacial Gain** | 5% | 751 W | 40.6 V | 18.51 A | 48.5 V | 19.57 A | 24.2% |
| | 10% | 787 W | 40.6 V | 19.39 A | 48.5 V | 20.50 A | 25.3% |
| | 20% | 858 W | 40.6 V | 21.16 A | 48.5 V | 22.37 A | 27.6% |

* Under Standard Test Conditions (STC) of irradiance of 1000 W/m², spectrum AM 1.5 and cell temperature of 25°C.
** Bifacial Gain: The additional gain from the back side compared to the power of the front side at the standard test condition. It depends on mounting (structure, height, tilt angle etc.) and albedo of the ground.

## ELECTRICAL DATA | NMOT*

| | Nominal Max. Power (Pmax) | Opt. Operating Voltage (Vmp) | Opt. Operating Current (Imp) | Open Circuit Voltage (Voc) | Short Circuit Current (Isc) |
|---|---|---|---|---|---|
| CS7N-685TB-AG | 518 W | 37.2 V | 13.91 A | 44.8 V | 14.79 A |
| CS7N-690TB-AG | 522 W | 37.4 V | 13.94 A | 45.0 V | 14.83 A |
| CS7N-695TB-AG | 526 W | 37.6 V | 13.97 A | 45.2 V | 14.87 A |
| CS7N-700TB-AG | 529 W | 37.8 V | 14.00 A | 45.4 V | 14.91 A |
| CS7N-705TB-AG | 533 W | 38.0 V | 14.03 A | 45.5 V | 14.95 A |
| CS7N-710TB-AG | 537 W | 38.2 V | 14.06 A | 45.7 V | 14.99 A |
| CS7N-715TB-AG | 541 W | 38.4 V | 14.09 A | 45.9 V | 15.03 A |

* Under Nominal Module Operating Temperature (NMOT), irradiance of 800 W/m², spectrum AM 1.5, ambient temperature 20°C, wind speed 1 m/s.

## MECHANICAL DATA

| Specification | Data |
|---|---|
| Cell Type | TOPCon cells |
| Cell Arrangement | 132 [2 x (11 x 6) ] |
| Dimensions | 2384 × 1303 × 33 mm (93.9 × 51.3 × 1.30 in) |
| Weight | 37.8 kg (83.3 lbs) |
| Front Glass | 2.0 mm heat strengthened glass with anti-reflective coating |
| Back Glass | 2.0 mm heat strengthened glass |
| Frame | Anodized aluminium alloy |
| J-Box | IP68, 3 bypass diodes |
| Cable | 4.0 mm² (IEC), 12 AWG (UL) |
| Cable Length (Including Connector) | 360 mm (14.2 in) (+) / 200 mm (7.9 in) (-) or customized length* |
| Connector | T6 or MC4-EVO2 or MC4-EVO2A |
| Per Pallet | 33 pieces |
| Per Container (40' HQ) | 594 pieces or 495 pieces (only for US & Canada) |

* For detailed information, please contact your local Canadian Solar sales and technical representatives.

## ELECTRICAL DATA

| | |
|---|---|
| Operating Temperature | -40°C ~ +85°C |
| Max. System Voltage | 1500 V (IEC/UL) |
| Module Fire Performance | TYPE 29 (UL 61730) or CLASS C (IEC61730) |
| Max. Series Fuse Rating | 35 A |
| Protection Class | Class II |
| Power Tolerance | 0 ~ + 10 W |
| Power Bifaciality* | 80 % |

* Power Bifaciality = $Pmax_{rear}$ / $Pmax_{front}$, both $Pmax_{rear}$ and $Pmax_{front}$ are tested under STC, Bifaciality Tolerance: ± 5 %

## TEMPERATURE CHARACTERISTICS

| Specification | Data |
|---|---|
| Temperature Coefficient (Pmax) | -0.29 % / °C |
| Temperature Coefficient (Voc) | -0.25 % / °C |
| Temperature Coefficient (Isc) | 0.05 % / °C |
| Nominal Module Operating Temperature | 41 ± 3°C |

* The specifications and key features contained in this datasheet may deviate slightly from our actual products due to the on-going innovation and product enhancement. CSI Solar Co., Ltd. reserves the right to make necessary adjustment to the information described herein at any time without further notice.
Please be kindly advised that PV modules should be handled and installed by qualified people who have professional skills and please carefully read the safety and installation instructions before using our PV modules.

## PARTNER SECTION

**CSI Solar Co., Ltd.**
199 Lushan Road, SND, Suzhou, Jiangsu, China, 215129, www.csisolar.com, support@csisolar.com

March 2024. All rights reserved, PV Module Product Datasheet V1.7_EN