# User Manual

## Model: MS-MPPT400-2

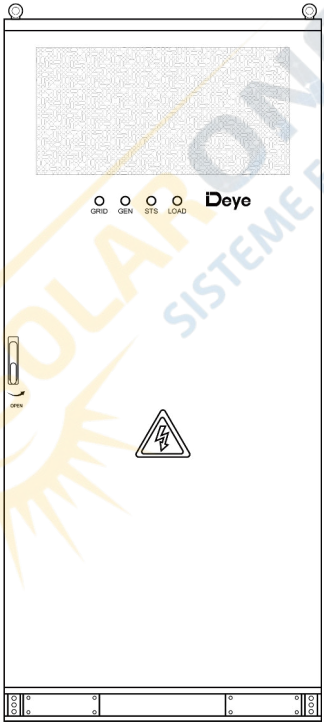


SOLARONE.RO®
SISTEME FOTOVOLTAICE

# Contents

1 General information ..... 3
1.1 All Rights Reserved ..... 3
1.2 About This Manual ..... 4
2 Product Description ..... 4
2.1 Product Introduction ..... 5
2.2 Application Scenarios ..... 6
2.3 Product Size ..... 7
2.4 External Overview ..... 8
2.5 Internal Overview ..... 10
3 Installation ..... 12
3.1 Materials Required ..... 12
3.2 Moving Heavy Objects ..... 15
3.3 Unpacking ..... 17
3.4 Hoisting ..... 19
3.5 Installation ..... 24
4 Electrical Connection ..... 38
4.1 Preparation before Connection ..... 38
4.2 Cable Connection ..... 42
5 Operation Instructions ..... 55
5.1 Powering on the Equipment ..... 55
5.2 Powering Off The Equipment ..... 61
6 Maintenance ..... 62
6.1 General Maintenance ..... 62

SOLARONE.RO SISTEME FOTOVOLTAICE

6.2 Maintenance Schedule ..... 64

7 Troubleshooting ..... 70

8 Repair Paint Damage ..... 71

8.1 Prerequisites ..... 71

8.2 Paint Repair Description ..... 71

9 Emergency Handling ..... 77

9.1 Strong Impact ..... 77

9.2 Flood ..... 77

9.3 Fire ..... 78

10 Storage ..... 79

11 Transport ..... 82

12 Technical Specifications ..... 83

SOLARONE.RO
SISTEME FOTOVOLTAICE

# 1 General information

**Warning!**

**Read and follow carefully all safety warnings, instructions, illustrations and specifications provided with this product.** Failure to follow instructions mentioned may results in electric shock, fire or serious injury.

**Save all warnings and instructions for future reference.**

## 1.1 All Rights Reserved

No part of this document can be reproduced in any form or by any means without the formal permission of the manufacturer .

**Trademarks and Permissions**

The trademarks used in this manual are owned by the manufacturer. All other trademarks or registered trademarks mentioned in this manual are owned by their respective owners.

**Software Licenses**

* It is prohibited to use data contained in firmware or software developed by the manufacturer, in part or in full, for commercial purposes by any means.
* It is prohibited to perform reverse engineering, cracking, or any other operations that compromise the original program design of the software developed by the manufacturer.

**Disclaimer**

“DANGER”, “WARNING”, “CAUTION”,“NOTICE” and “NOTE” in this manual do not represent all safety matters that should be followed, and you must also comply with relevant international, national or regional standards and industry practices. The manufacturer shall not be liable for personal injury,

property loss, product damage and subsequent losses under the following circumstances:

* Damages caused by force majeure, including earthquake, flood, volcanic eruption, mudslide,, lightning, fire, war, military conflict,typhoon, hurricane, and so on.
* Failure to comply with the provisions of this manual.
* The installation, operation and storage environment does not meet the relevant international, national or regional standards;
* Incorrect use of this product.
* Unauthorized or unqualified personnel repair the product, disassembly the rack and perform other operations.
* Use of unapproved spare parts.
* Unauthorized modifications or technical changes to the product or software.
* Incorrect shipment by yourself or the third party commissioned by you.
* Unsatisfactory materials and tools from you own that do not meet the relevant international, national or regional standards.
* Damage caused by yourself or the third party's negligence, intent, gross negligence, improper operation, or other accidents not caused by Deye.

## 1.2 About This Manual

This manual mainly describes the product information, guidelines for installation, operation and so on. In this manual, “equipment” or “ device” refers to relevant product, software, part, spare part or service,etc; “The manufacturer” refers to the producer, seller or service provider of the equipment.

# 2 Product Description

## 2.1 Product Introduction

This equipment is a specialized electrical control center that integrates Maximum Power Point Tracking (MPPT) technology along with a switching mechanism to seamlessly transition between grid-connected and off-grid operating modes. It is designed for hybrid renewable energy systems, particularly photovoltaic (PV) applications, where it optimizes the energy harvesting efficiency of solar panels under varying environmental conditions while enabling flexible system operation depending on grid availability or user preference.Key features include:

1. Integration of MPPT controllers for optimizing solar panel output. A reliable conversion switch for transitioning between grid-connected and off-grid modes.

2. Comprehensive protection, monitoring, and control functions for connected components.

3. Power supply priority: on-grid > generator off-grid.

## 2.2 Application Scenarios

The product has a wide range of application scenarios, which can be achieved with the assistance of the EMS. The use and other detailed information of the EMS can be available through scanning the QR code:

SOLARONE.RO SISTEME FOTOVOLTAICE

# 2.3 Product Size

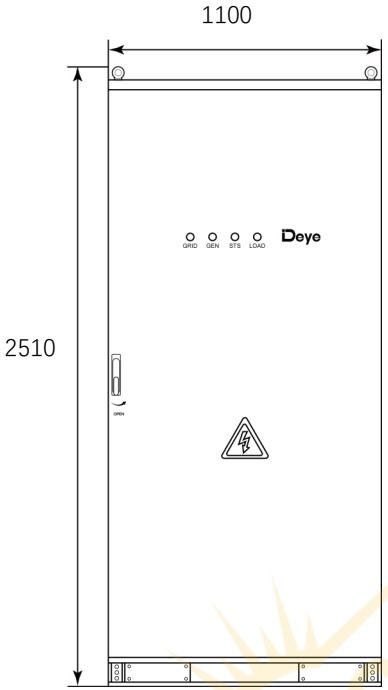


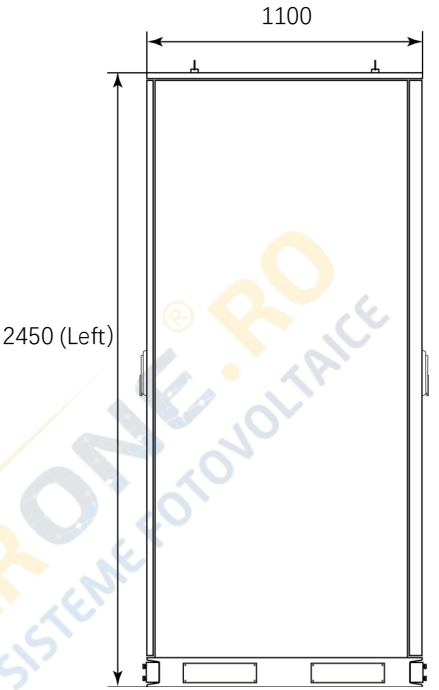


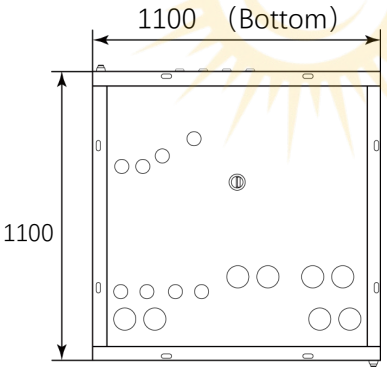


SOLARONE.RO® SISTEME FOTOVOLTAICE

# 2.4 External Overview

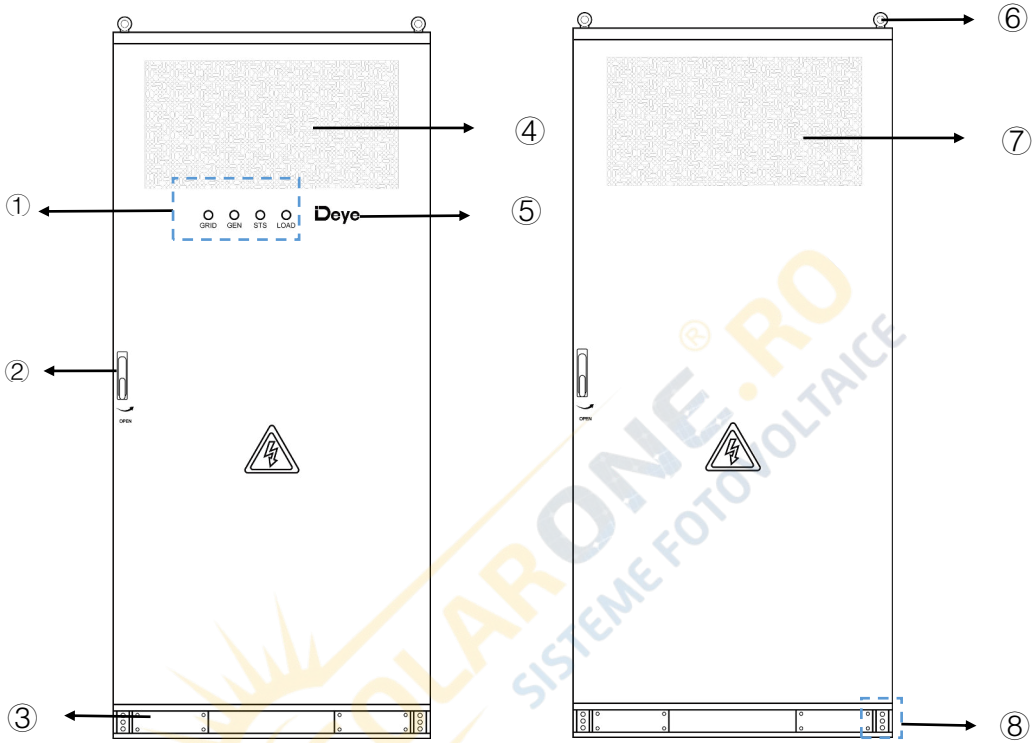


| | | |
|---|---|---|
| ①Indicators | GRID | The LED lights up when grid input terminals are energized |
| | GEN | The LED lights up when diesel generator input terminals are energized |
| | STS | The LED lights up when output terminals of the STS transfer switch are energized |
| | LOAD | The LED lights up when output terminals of the load molded case circuit breaker are energized |
| ②Door Lock×2 | | To control the opening and closing of the cabinet door |
| ③Forklift insertion×8 | | Insertion positions of fork when moving the cabinet using a forklift |
| ④ Air inlet | | An opening designed to allow air to enter the |

| | | |
|---|---|---|
| | system, typically to facilitate ventilation and cooling | |
| ⑤ Status indicator, (to display the equipment's state by illuminating the imprinted “DEYE” in color) | DEYE (Blue) | The system is in standby mode |
| | DEYE (Green) | The system is in run. |
| | DEYE (Yellow) | The system emits an alarm . |
| | DEYE (Red) | There is some errors existing in the system. |
| ⑥ Hanging ring | To help hoist the equipment | |
| ⑦ Air outlet | An opening designed to allow air to exit a system, typically to facilitate ventilation and cooling. | |
| ⑧ Protective earth×4 | A conductive path that connects non-current-carrying metallic parts of your equipment to the earth, ensuring safety by preventing hazardous voltages in case of insulation failure. | |

SOLARONE.RO SISTEME FOTOVOLTAICE

# 2.5 Internal Overview

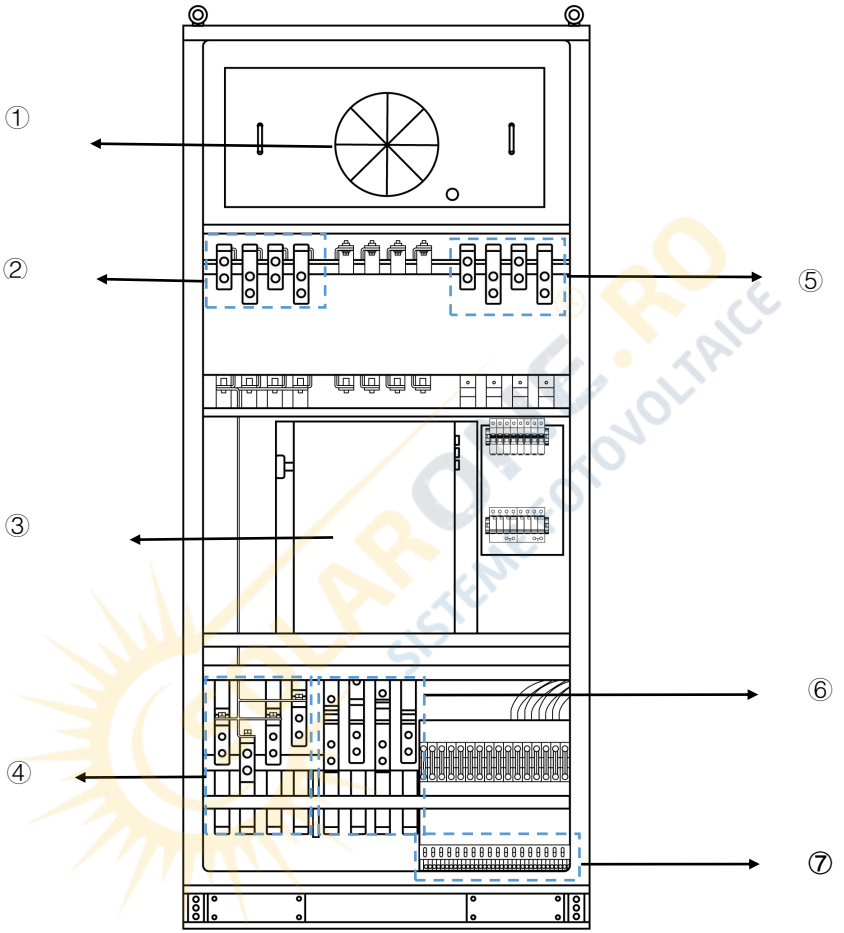


| | |
|---|---|
| 1. Fan | 5. Diesel generator input terminal blocks |
| 2. Grid input terminal blocks | 6. PCS input terminal blocks |
| 3. STS transfer switch | 7. PV input terminal blocks |
| 4. Load input terminal blocks | |

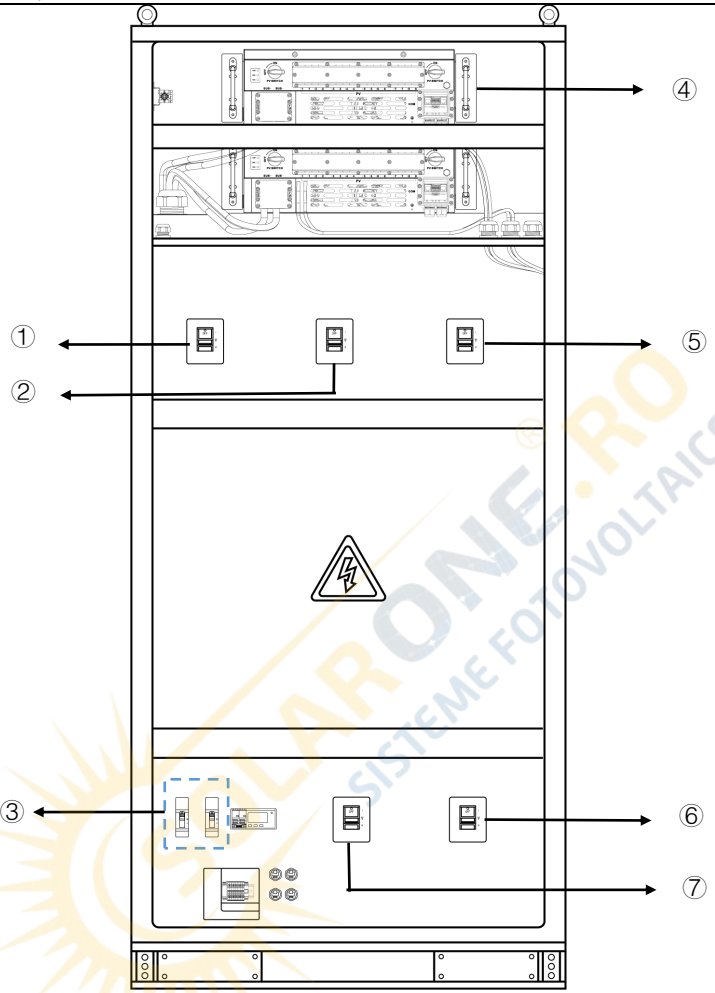


| | |
|---|---|
| 1. Diesel generator molded case circuit breaker | 5. Grid molded case circuit breaker |
| 2. Bypass circuit breaker | 6. Load molded case circuit breaker |
| 3. MPPT circuit breaker×2 | 7. PCS molded case circuit breaker |
| 4. MPPT×2 | |

# 3 Installation

## 3.1 Materials Required

| Tools | | | |
|---|---|---|---|
| 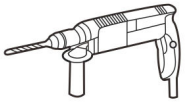 | | | 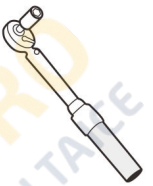 |
| Hammer drill | Phillips insulated torque screwdriver | Flat-head insulated torque screwdriver | Insulated torque socket wrench |
| 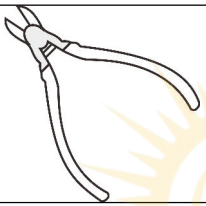 | 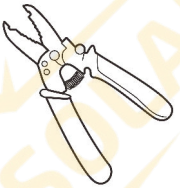 | 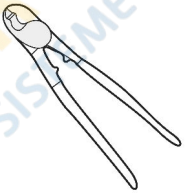 | 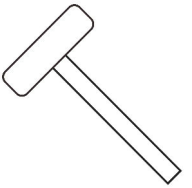 |
| Diagonal pliers | Wire stripper | Cable cutter | Rubber mallet |
| 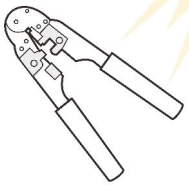 | 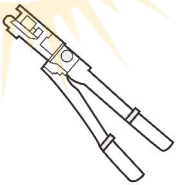 | 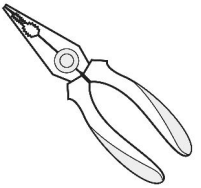 | 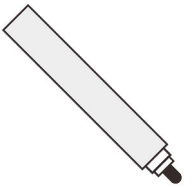 |
| RJ45 crimping tool | Hydraulic pliers | Needle-nose pliers | Marker |

| | | | |
|---|---|---|---|
| | 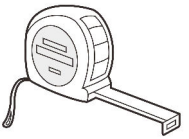 | | 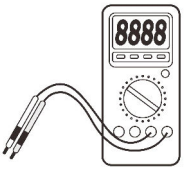 |
| Utility knife | Steel measuring tape | Level | Multimeter DC voltage measurement |
| 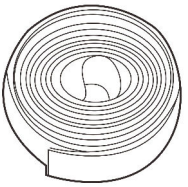 | 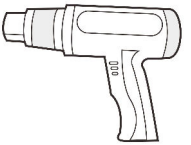 | 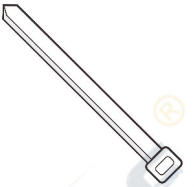 | |
| Heat shrink tubing | Heat gun | Cable tie | Insulated ladder |
| | | | |
| Powered industrial forklift | Crane | | |
| Personal Protective Equipment | | | |
| | | | 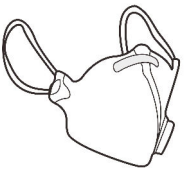 |
| Insulated gloves | Protective gloves | Goggles | Dust mask |

SOLARONE.RO® SISTEME FOTOVOLTAICE

| | | | |
|---|---|---|---|
| | 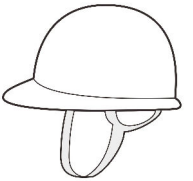 | | |
| Insulated shoes | Safety helmet | Protective suit | |

SOLARONE.RO®
SISTEME FOTOVOLTAICE

# 3.2 Moving Heavy Objects

After arrival of your goods, perhaps you need move it to designated working area. Refer to the following picture for movement of heavy objects.

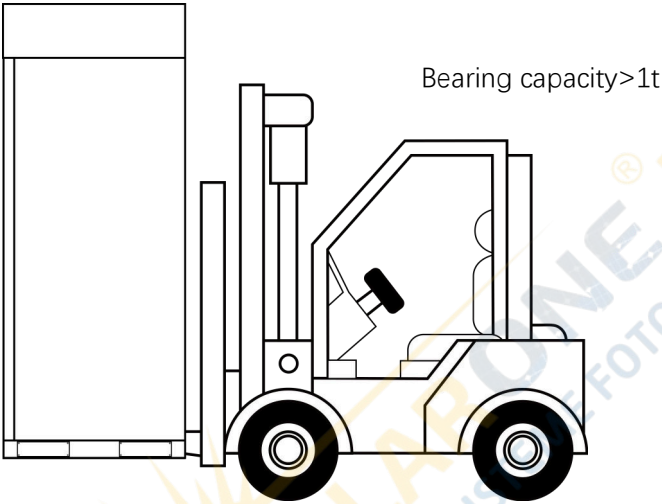


**When moving your product:**

- Keep at least 2m away from the forklift during operation.
- No passengers are permitted to stand on or be lifted by forklifts.
- Do not overload forklifts or raise loads too high, as this can affect overall stability.
- Maintain speeds below 3mph and avoid sharp turns.
- Before reversing, the forklift operator must check behind them and ensure it is safe to proceed.
- When reversing in confined spaces, a spotter is needed,who directs the forklift operator.

- Use caution when lifting this load on uneven surfaces.

- Never operate the forklift on slopes ⩾ 5 degrees.

- During movement, avoid tilting the cabinet or placing it upside down. If the cabinet must be tilted or inverted , please straighten it as soon as possible, and the cabinet needs to be left standing for 2 hours before it can be powered on.

- Suggest to insert the forklift tooth into the position indicated by the “Forklift fork insertion: in the package material. See the following figure.

- When lifted heavy unbalanced load, refers to the marking for center of gravity location.

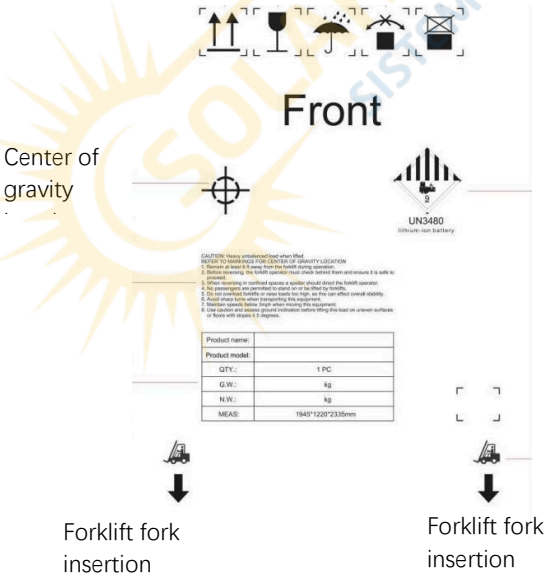

# 3.3 Unpacking

**Warning!**

- After setting up the equipment well, carefully unpack the package so as to avoid scratching equipment.
- If possible, do not remove the transport packaging before arrival at the installation site.
- After unpacking, check whether the fasteners and removable parts are missing. If they are missing, please contact you vendor at once.
- Keep the equipment stable during unpacking.
- If the installation environment is not friendly to the equipment, take measures to prevent failure inside the battery caused by condensation or dust corrosion (for example, cover with woven cloth or dust cover).
- When it comes to package, EPE foam is broadly used for most of products, which characterizes with anti-shock and easy-disassemble. It is possible to unpack the equipment with a tool like a cutter or knife.

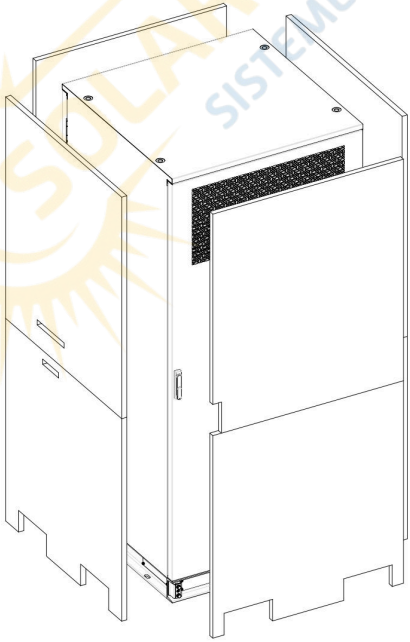

After unpacking the equipment, check that the deliverable contents are intact and complete, and free from any damage. If any items listed in the *Packing List* is missing or damaged, contact your dealer or call service hotline: **+86-0574-86320560.**

| **Packing List** | | |
|---|---|---|
| | | |
| M16*150 Expansion bolt ×8 pcs | Cover Plate ×8 pcs | M10*35 Hexagon combination screw **×4 pcs** |
| | | 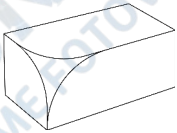 |
| Circuit breaker handle **×3** | M16 Hanging ring ×4 pcs | Fire-resistant mud 2.5kg |
| 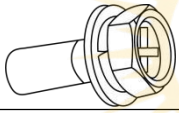 | | |
| M6*16 Cross-recessed hex head combination bolt×35 pcs | | |

# 3.4 Hoisting

## 3.4.1 Hoisting Equipment

**Warning!**

- The hoisting personnel must be trained and qualified until they can take up the post.
- Use only approved lifting equipment to move the cabinet system.

**Warning!**

- Never operate the lifting equipment in bad weather, such as typhoon, heavy rain, thick fog,thunder and so on.
- Before hoisting, ensure that the crane and hoisting ropes meet the load-bearing requirements.
- Do not drag the cabinet when assembling or disassembling the hoisting equipment. Otherwise, the cabinet may be scratched.
- Ensure that all doors of the equipment are closed and locked before hoisting.

SOLARONE.RO® SISTEME FOTOVOLTAICE

## 3.4.2 Installing the Hanging rings

1. Remove four hexagon screws that are preset at the factory to prevent dust or other foreign objects entering the equipment. See the Figure.1.
2. Insert the four hanging rings into holes on the top f the machine and then turn them clockwise until they are secured firmly. See the Figure.2 and Figure.3.

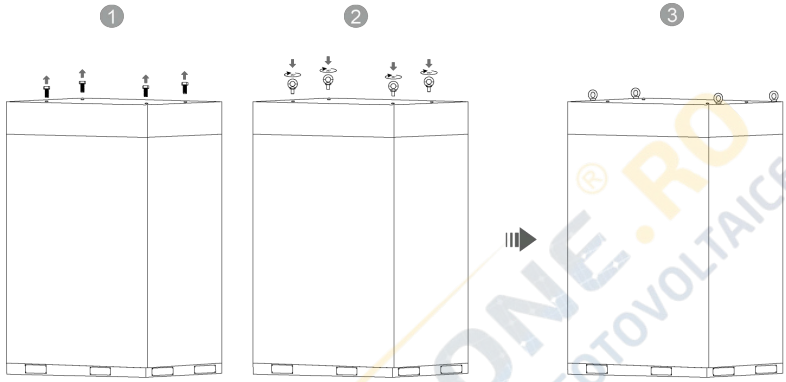


Figure.1 Figure.2 Figure.3

SOLARONE.RO
SISTEME FOTOVOLTAICE

### 3.4.3 Hoisting the cabinet

**Warning!**

Remember to make sure that your device is connected to the lifting tool correctly and firmly before hoisting. Failure to do so may result in product damages, serious injury,even death.

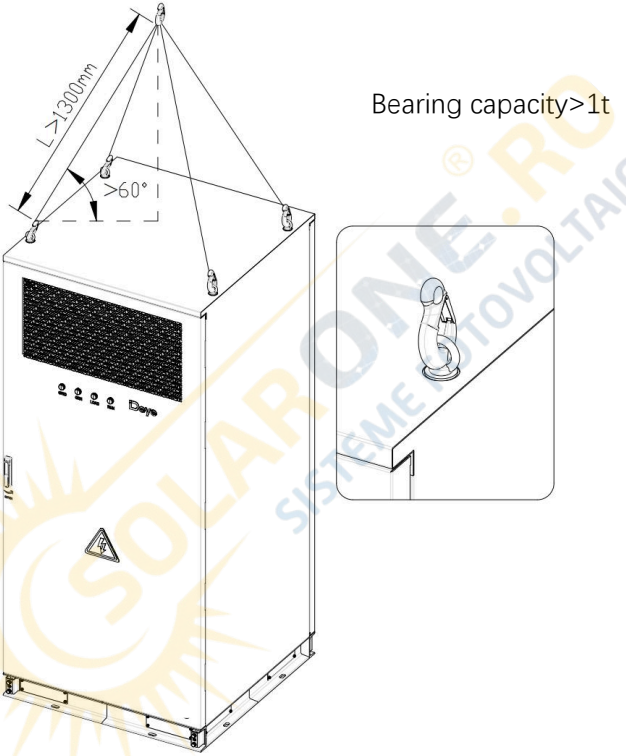


Figure.1

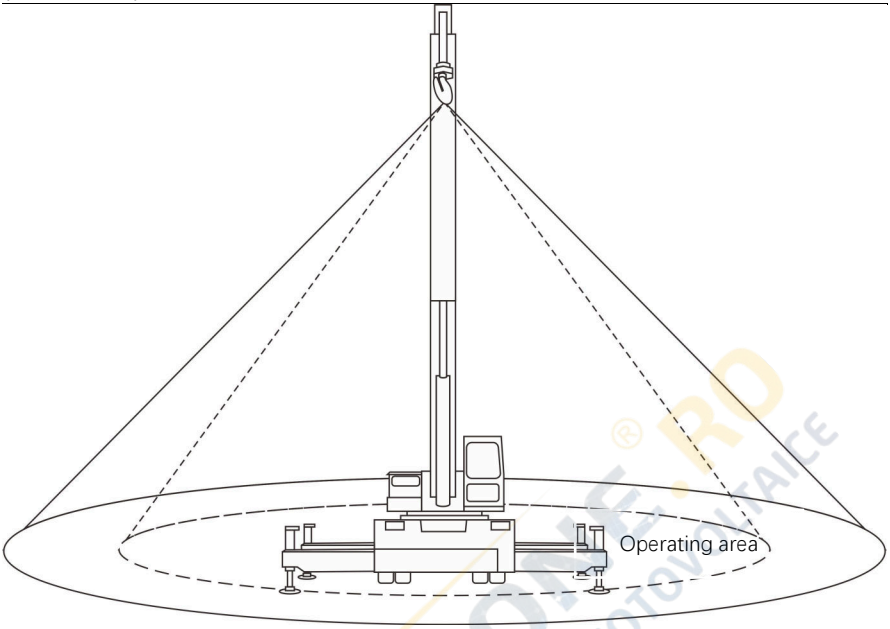


Figure.2

- Ensure that all sling connections are safe and reliable, and that the lengths of the slings connected to the corner fittings are equal. See the Figure.1
- Do not stand within 0.5-1m of the lifting area! During the whole lifting process, no one is allowed to stand under the boom or the work station. See the Figure.2
- A professional instructor is needed in the whole hoisting process.
- The length of the sling can be adjusted appropriately according to the actual requirements of installation site.
- During the lifting process, the devices must be stable and not skewed.
- Please lift the devices from the bottom.
- It is recommended to hoist the equipment from left to right or from right to left to ensure the smooth hoisting.
- Ensure that the crane position is suitable, no long distance hoisting.
- The equipment should be hoisted vertically and should not be dragged on any surface during hoisting.

- Do not shake the crane in order to avoid sudden drop or shock against equipment.
- Hoisting should be handled gently, and the cabinet should fall slowly and smoothly to avoid shock against equipment.

SOLARONE.RO®
SISTEME FOTOVOLTAICE

# 3.5 Installation

**Warning!**

• Your product is delivered without full charge. It is recommended to make your equipment charged within three months.
• Assembly must be carried out in accordance with the design, technological requirements, regulations and relevant standards.
• The parts must be cleaned before assembly, free of burrs, flash edges, oxide, rust, sand, dust and stains.
• The parts shall not be bumped, scratched or rusted during assembly.
• Wear appropriate personal protective equipment at all times during any assembly operation on site. The following personal protective equipment is considered a minimum requirement:
-In a dry environment, wear S3 safety shoes .
-On rainy or wet ground, wear S5 safety boots .
-Wear flame-retardant work clothes.
-Wear flame-retardant work pants.
-Safety gloves.

## 3.5.1 Installation Requirements

### 3.5.1.1 Installation Personnel

• Only qualified professionals or trained personnel are allowed to install, the equipment.

-Professionals:personnel who are familiar with the working principles and structure of the equipment, trained or experienced in equipment operations and are clear of the sources and degree of various potential hazards in equipment installation.

-Trained personnel:personnel who are trained in technology and safety

have required experience,are aware of possible hazards on themselves in certain operations and are able to take protective measures to minimize the hazards on themselves and other people.

• Personnel who plan to install the equipment must receive all necessary safety precautions and local relevant standards.

•Only qualified professionals are allowed to remove safety facilities and inspect the equipment.

•Knowledge of electronic, electrical wiring and mechanical expertise, and be familiar with electrical and mechanical schematics.

• Understanding and complying with this document and other applicable documents.

SOLAROME.RO
SISTEME FOTOVOLTAICE

### 3.5.1.2 Installation site requirements

**Danger!**

Do not expose the equipment to flammable or explosive gas or smoke. Do not perform any operation on the equipment in such environments.

**Danger!**

Do not store any flammable or explosive materials in equipment area.

**Danger!**

Do not place the equipment near heat sources or fire sources, such as smoke, candies, heaters, or other heating devices. Overheat may damage the equipment or cause a fire.

**Warning!**

Install the equipment in an area far away liquids. Do not install it under areas prone to condensation, such as under water pipe and air exhaust vent, or area prone to water leakage, such as air conditioner vents, or ventilation vents. Ensure that no liquid enters the equipment to prevent faults or short circuits.

**Warning!**

To prevent damage or fire due to high temperature, ensure that the ventilation vents or heat dissipation systems are not obstructed or covered by other objects while the equipment is running.

GOLDONE.RO SISTEME FOTOVOLTAICE

• The installation and usage environment must meet relevant international, the local laws and regulations.The user is obliged to protect the equipment against fire or other hazards.

• Do not install in low-lying areas. The installation level must be at least 300mm higher than the highest water level in the area.

• To protect the equipment from wildfires caused by high temperatures in summer, it should be free of vegetation and flammable plants within 3 meters of the surrounding area.

• Considering safety, the distance between the equipment and residential buildings should be more than 12m, and the distance between the equipment and schools, hospitals and other densely populated buildings should be more than 30.5m. If this safety distance cannot be met, a firewall should be built between the equipment and the building.

• The safe distance between the equipment and the production building shall comply with local fire codes or standards.

• Outdoor storage systems should be at least 10 feet away from boundaries, public roads, buildings, flammable materials, hazardous materials, high piles, and other hazards not associated with the grid infrastructure.

• The equipment should be installed in an environment free from the risk of explosion。

•Reserve enough space for expansion according to the needs of the whole life cycle.

• Ensure that the equipment is installed in a clean, dry and well ventilated area with proper temperature, humidity ,altitude range and so on. Check for more data in the "***Technical Specifications***" section.

• Do not install the equipment in salt-damaged or polluted areas because they may be corroded. This product can be used in the following or better environments:

-In a place where is 2000m far away from the coast. It is not recommended to use the product when it within 500m to 2000m away from the coast . The equipment cannot be used when the distance from the coast is less than 500m .

-In a place where the distance from heavy pollution sources, such as smelters, coal mines, thermal power plants, is more than 1500m at least.

-In a place where the distance from moderate pollution sources such as

chemical, rubber, and electroplating is more than 1000m at least.

-In a place where the distance from light pollution sources such as food, leather, heating boilers, slaughter houses, centralized garbage dumps, and sewage treatment stations is more than 500m at least.

• Keep the equipment out of the reach of children and away from daily working or living area, including but not limited to the following areas:studio, bedroom, lounge, living room, music room, kitchen,game room, room theater, sunroom,toilet,bathroom,laundry,and attic.

• Do not install the equipment in places without proper fire fighting facilities, or difficult for firefighters to access.

• Do not install the equipment in an easily accessible position because the temperature of the enclosure and heat sink is high when the equipment is running.

• Do not install the equipment on a moving object, such as ship, train, or car.

• Do not install the equipment in an environment with magnetic dust, volatile or corrosive gases, infrared and other radiations, organic solvents, conductive metal,or salty air.

• Do not install the equipment in an area conducive to growth of microorganism such as fungus or mildew.

• Do not install the equipment in an area with strong vibration, noise, or electromagnetic interference.

• Do not install the equipment in an position that may be submerged in water.

SOLARONE.RO
SISTEME FOTOVOLTAICE

### 3.5.1.3 Foundation requirements

An inadequately constructed foundation can introduce substantial challenges to the installation of Energy Storage Systems (ESS), affecting the smooth operation of doors and the overall functionality of the system. Consequently, the foundation for an ESS must be meticulously designed and constructed in accordance with established standards. This ensures it fulfills the necessary requirements for mechanical support, cable routing, and future maintenance and overhaul operations. During the construction of the foundation, at least the following criteria must be satisfied:

1. **Surface Material:** Install cabinets on concrete or other non-combustible surfaces.
2. **Surface Condition:** Ensure the surface is level, secure, flat, with sufficient load-bearing capacity, and free of depressions or tilts.
3. **Concrete Specifications:** Default to C30 grade concrete with a thickness of 200mm if not specified.
4. **Extension Beyond Cabinet:** Extend each side 300mm beyond the cabinet edges.
5. **Reinforcing Steel Bars:** Use HRB400 (Grade III) steel bars, 12mm diameter, spaced 150mm apart.
6. **Anti-Corrosion Measures:** Apply anti-corrosion treatments to steel bars after rust removal as per standards.
7. **Bedding Layer:** Use a 100mm thick C15 grade bedding layer under the slab.
8. **Bearing Stratum:** Foundation bearing stratum must be undisturbed soil with a characteristic bearing capacity ⩾100Kpa.
9. **Dewatering Measures:** Implement dewatering during construction to prevent waterlogging in the foundation pit.
10. **Excavation Safety**: Ensure proper safety measures for excavation support.
11. **Water Prevention:** After excavation, the foundation pit must not be soaked in water. If disturbed by water, further excavation and replacement filling are required.
12. **Height Requirement:** The foundation must be higher than the local

historical highest water level and at least 300mm above the ground level.

13. **Drainage System:** Build drainage facilities according to local geology and municipal drainage requirements to ensure no water accumulation occurs at the equipment foundation. It should meet the drainage needs for the largest rainfall in local history. Discharged water from the drainage system must be treated in accordance with local laws and regulations.
14. **Surface Leveling:** The levelness error between the equipment foundation and the cabinet contact surface must be ≤3mm.
15. **Pit Compaction:** The bottom of the equipment foundation pit must be compacted and leveled before proceeding with construction.
16. **Weight Bearing:** The equipment foundation is configured according to the total weight of the equipment. If the bearing capacity of the foundation does not meet requirements, re-verification is necessary.
17. **Cable Management:** When building the foundation, consider the cable outlet of the energy storage system and reserve trenches or inlet holes accordingly.
18. **Sealing:** Both the reserved holes of the equipment foundation and the inlet holes at the bottom of the equipment should be sealed after installation.

## Cable Trench Requirements

For energy storage cabinets adopting the bottom cable entry method, a trench must be pre-installed on-site since no side cable inlets are provided to prevent foreign objects from entering. The following requirements apply to the trenches:

1. **Dust-proof and Rodent-proof Design:** To avoid foreign objects entering the energy storage cabinets, the trench must have an effective dust-proof and rodent-proof design.
2. **Waterproof and Moisture-proof Measures:** In order to prevent cable aging and short circuits that could impact the normal operation of the energy storage cabinets, the trench needs waterproof and moisture-proof measures.
3. **Sufficient Cable Bending Radius:** Considering the larger power rating of the energy storage cabinets and the requirement for thicker cables, the

trench design must take into account the cross-sectional area of the cables and provide a sufficient bending radius.

**Warning!**

The foundation drawing cannot be used as the final construction drawing but only for reference. Users must verify the design parameters of the energy storage system foundation based on the installation environment, ground bearing capacity, geological conditions, and seismic requirements of the project site.

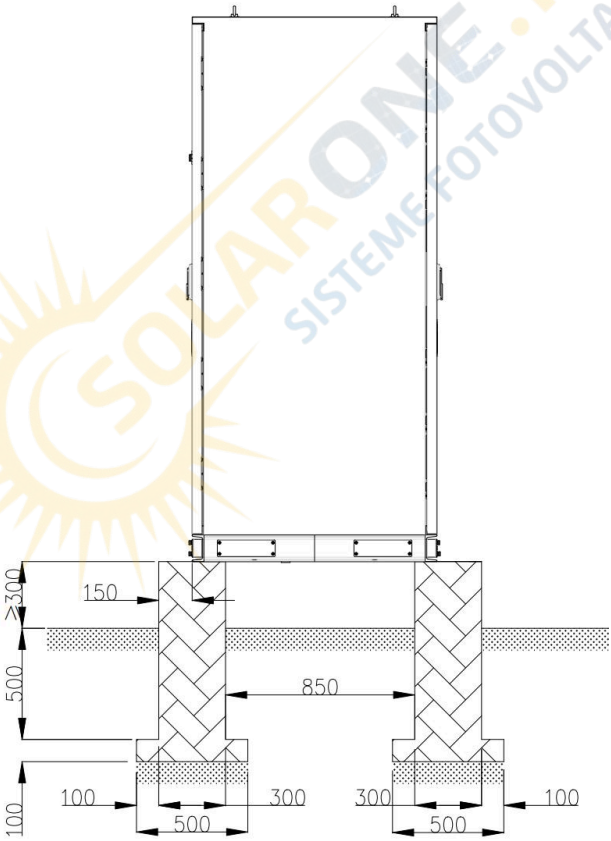


SOLARONE.RO® SISTEME FOTOVOLTAICE

### 3.5.1.4 Installation clearance requirements

**Danger!**

No one is allowed to pass within 1.5m behind the cabinet, otherwise this person may be hurt when explosion.

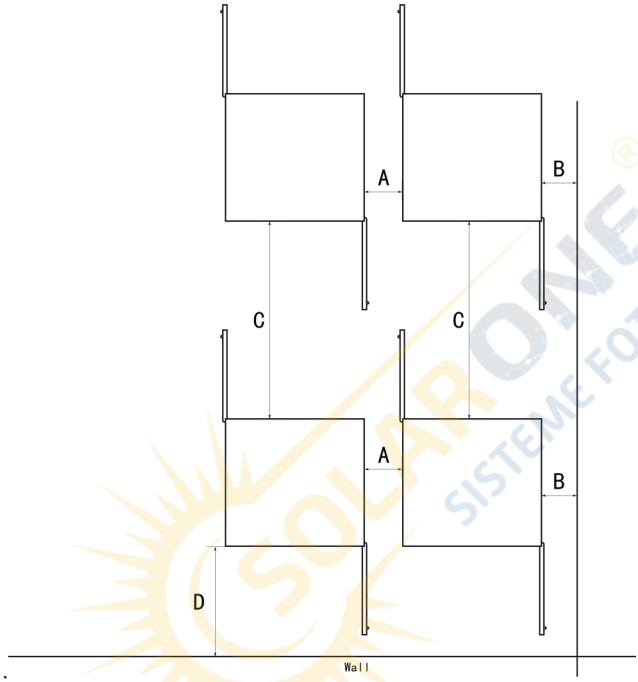


| Serial number | Distance (mm) |
|---|---|
| A | 150 |
| B | 150 |
| C | 1200 |
| D | 1500 |

SOLARONE.RO® SISTEME FOTOVOLTAICE

## 3.5.2 Assembling the Boards

Making sure that the cabinet has been seated well, you need to attach one board onto every hole for forklift fork insertion, which is used to prevent dust or other foreign objects entering the machine.

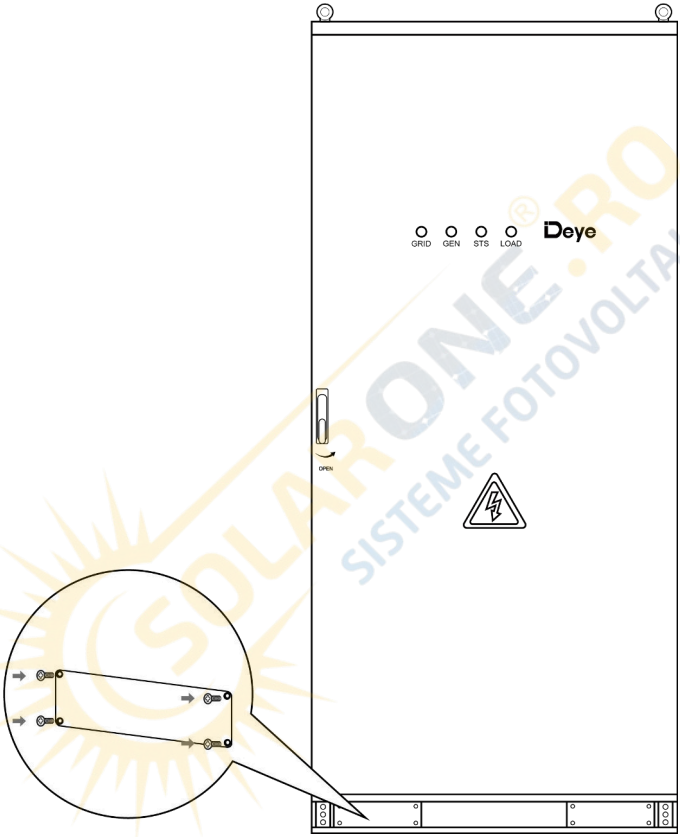


SOLARONE.RO
SISTEME FOTOVOLTAICE

# 3.5.3 Fixing the cabinet

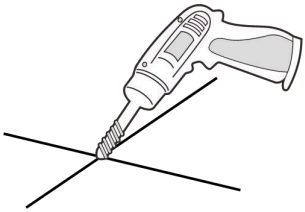

1

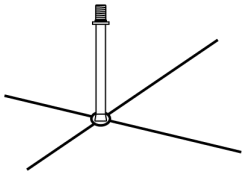

2

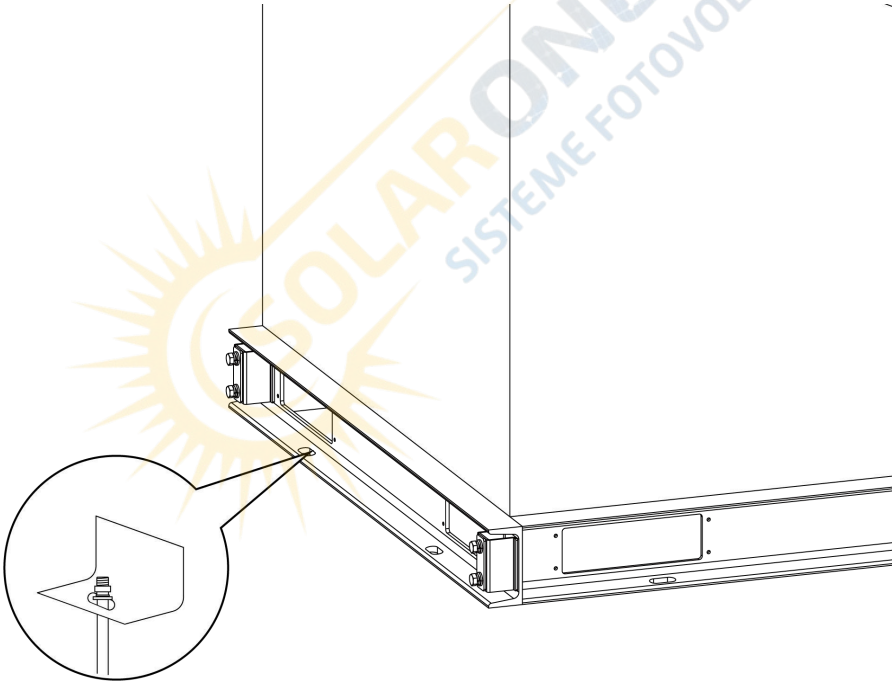

3

SOLARONE.RO
SISTEME FOTOVOLTAICE

1. Drill holes, with102-105mm depth, on the ground using an electric hammer.(①)
2. Pre-install the 8 expansion bolts (M16*150) with 140 N•m. (②)
3. Put the equipment in place and then secure it to the ground by attaching their nuts onto the bolts.(③)

**Note!**

Due to the uncertainty of drilling accuracy and bit material, it is recommended to choose a drill bit from Φ20.5 to Φ21.

SOLARONE.RO® SISTEME FOTOVOLTAICE

## 3.5.4 Install the EMS (Optional)

1. Secure the mounting board onto the cabinet with bolts (M8*16).

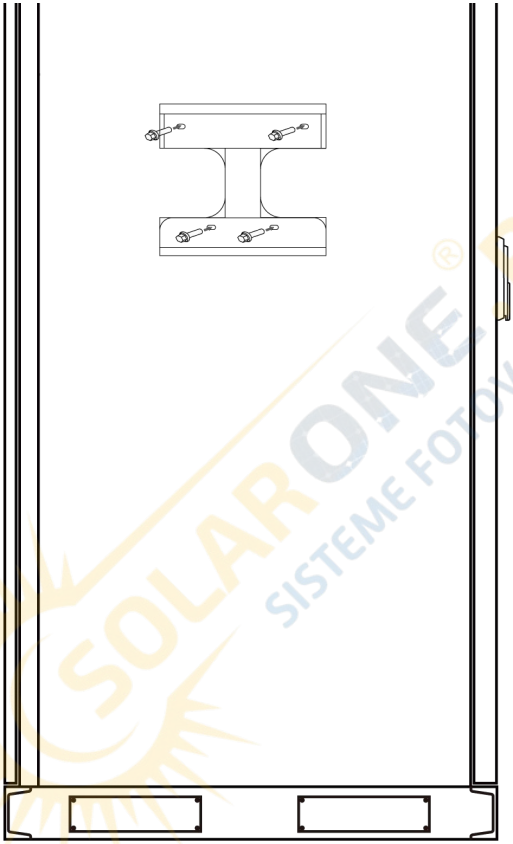

SOLARONE® RO
SISTEME FOTOVOLTAICE

2. Fix two backplane to the back of EMS cabinet with 8 bolts (M6*20).Tighten them.

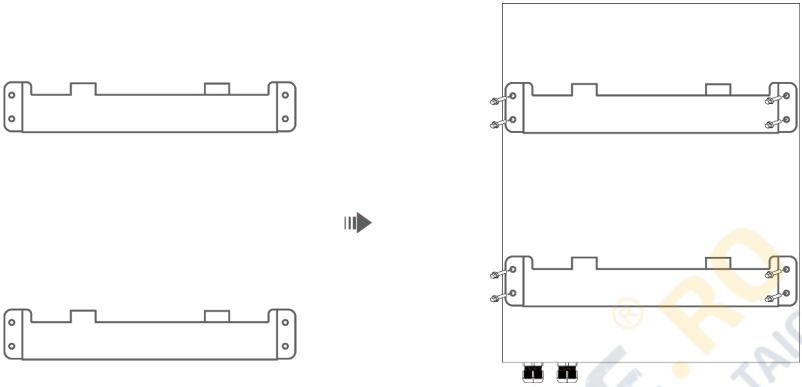

3. Lift the EMS and hook it onto the mounting board. Ensure that the upper and lower hooks of the backplane are accurately buckled on the mounting board.

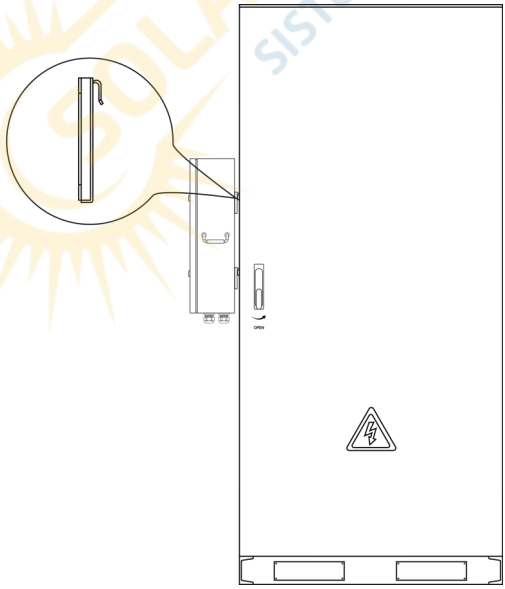


SOLARONIE.RO
SISTEME FOTOVOLTAICE

# 4 Electrical Connection

## 4.1 Preparation before Connection

**Caution!**

If the generator deployed in the power plant runs in off-grid mode and the load power exceeds the generator capacity, the generator may shut down due to overload. You are advised to shut down some loads.

**Warning!**

- Sand and moisture infiltration can damage the electrical equipment in the container or affect its operating performance!

-Do not perform electrical connections during sandstorms or when the relative humidity of the surrounding environment is greater than 95%.

-Make electrical connections when there is no wind or sand and when the weather is clear and dry.

- Before connecting cables, check that the polarity of all input cables is correct. Do not pull wires and cables forcibly during electrical installation.
- Otherwise, the insulation performance may be affected. Make sure all cables and wires have enough room to bend. Take necessary auxiliary measures to reduce the stress on cables and wires.
- After each connection is complete, carefully check whether the connection is correct and secure.

### 4.1.1 Cable Requirements

When wiring, cables are supposed to meet the following requirements:

- Sufficient current-carrying capacity. Factors that can influence this capacity are shown as follows:

-environment condition;
-the type of insulated materials of conductors;
-cable routing;
-material and cross-section of cables;

- Suitable diameter and length of cables
- Correct specification and material of cables used for DC input
- Correct specification and material of cables used for AC input
- Only use fire-resistant cables.

SOLARONE.RO
SISTEME FOTOVOLTAICE

## How to crimp an OT or DT terminal?

**Notice!**

- Avoid scratching the core wire when stripping a cable.
- The cavity formed after the conductor crimp strip of the OT terminal is crimped must wrap the core wire completely. The core wire must make close contact with the OT terminal.
- Wrap the wire crimping area with heat shrink tubing or insulation tape. The heat shrink tubing is used as an example.
- Use a heat gun carefully to avoid heat damage to the equipment.

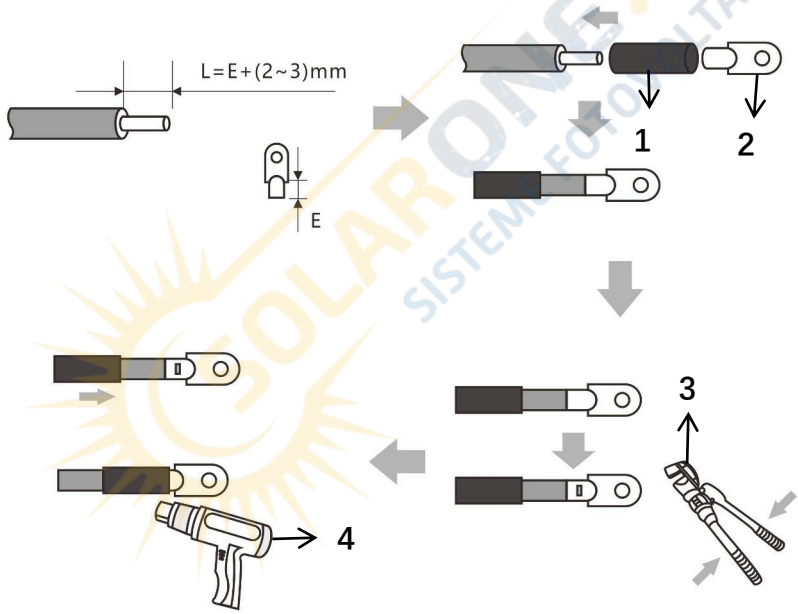


| NO. | Description | NO. | Description |
|---|---|---|---|
| 1 | Hot air duct | 3 | Hydraulic pliers |
| 2 | OT/DT | 4 | Heat Gun |

## 4.1.2 Opening the Door

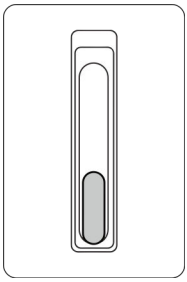

Figure.1

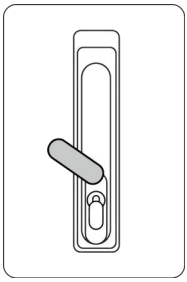

Figure.2

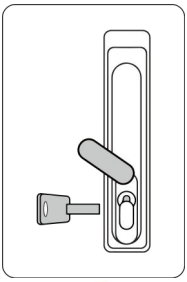

Figure.3

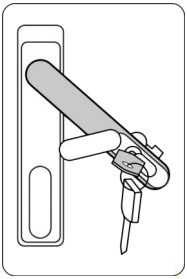

Figure.4

1. The door of the cabinet is in locked state.See the Figure.1
2. Move upward the cover above the keyhole.See the Figure.2
3. Insert the door key and turn it clockwise to eject the handle.See the Figure.3.
4. Turn the handle clockwise and pull out the door.See the Figure.4

SOLARONE.RO® SISTEME FOTOVOLTAICE

# 4.2 Cable Connection

**Danger!**

All electrical connections must be made when the equipment is completely powered off.

**Danger!**

Do not smoke or have an open flame around the equipment. Wear personal protective equipment and and use dedicated insulated tools to avoid electric shocks or short circuits.

**Warning!**

- Equipment damage caused by incorrect connections is not covered by the product warranty.
- Only qualified electrical technicians are allowed to connect cables.
- Operation personnel must wear proper PPE when connecting cables.

**Warning!**

When connecting cables, do not place installation tools, metal parts, or sundries on the equipment. After the connection, clean up objects around the area.

**Caution!**

- Do not connect two or more cables to the positive or negative power port at the same time.
- Stay away from the equipment when preparing cables to prevent cable scraps from entering the equipment. Cable scraps may cause sparks and result in personal injury and equipment damage.

SOLARONE.RO® SISTEME FOTOVOLTAICE

## 4.2.1 Grounding

**Warning!**

Ensure that the PE cable is securely connected. Otherwise, electric shocks may occur.

**Note!**

- The PE point at the AC output port is used only as a PE equipotential bonding point and cannot substitute for the PE point on the enclosure.
- It is recommended that silicone grease or paint be applied around the ground terminal after the PE cable is connected.
- After completing the grounding connection, the grounding resistance must be measured. The specific grounding resistance value should comply with the relevant national/local standards and regulations.
- Implementation of either protective earth or auxiliary power grounding is mandatory.

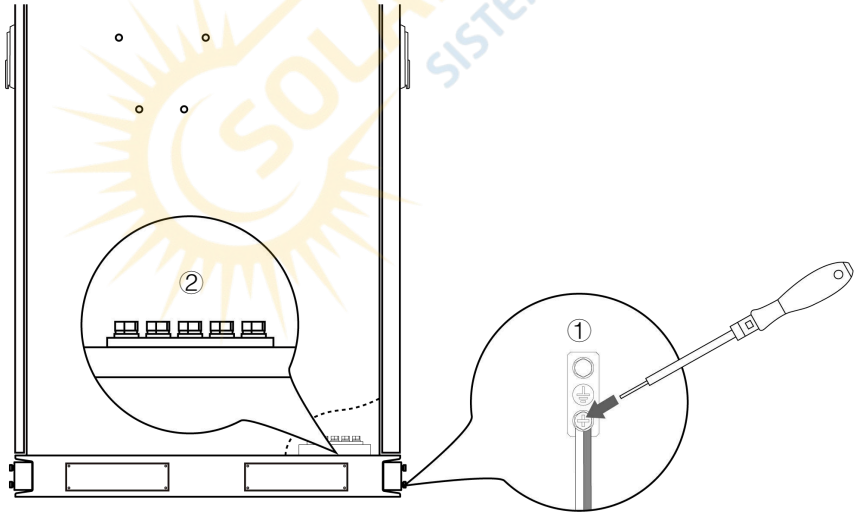

| No. | Type | Cable | Section (mm²) | Terminal | Torque (N•m) |
|---|---|---|---|---|---|
| ① | Protective earth | Grounding flat steel | 150~200 | / | |
| | | Grounding cable | 50~70 | M10 OT/DT terminal | 25 |
| ② | Auxiliary power grounding | Grounding cable | 1.5 | M6 OT terminal | 6 |

SOLARONE.RO SISTEME FOTOVOLTAICE

## 4.2.2 Connection inside the L430 system

### 4.2.2.1 Multi-unit wiring

The L430 system covers **4 types of products**, and you can combine and use them according to your needs:

| Type | Model | Designation |
|---|---|---|
| 1 | MC-L430-2H2 | AC/DC Energy Storage Cabinet |
| 2 | MC-L430-BC-2 | DC Energy Storage Cabinet |
| 3 | MS-MPPT400-2 | On-grid & Off-grid & PV Cabinet |
| 4 | EMS1000 | Energy Management System Cabinet |

SOLARONE® SISTEME FOTOVOLTAICE

There are **3 different modes** for you to meet your various demands:

## Mode 1:

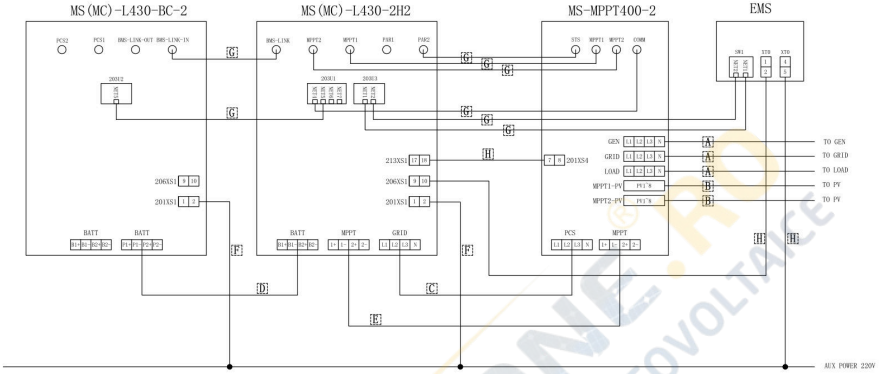


| Cable | Recommended size |
|---|---|
| A | 2×120mm² |
| B | 10mm² |
| C | 120mm² |
| D | 50mm² |
| E | 70mm² |
| F | 4mm² |
| G | CAT6 FTP |
| H | 1.5mm² |

## Mode 2:

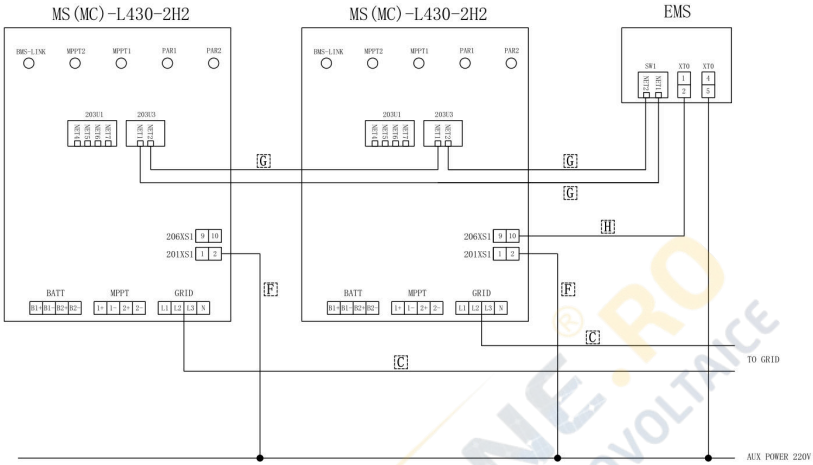


| Cable | Recommended size |
|---|---|
| C | 120mm² |
| F | 4 mm² |
| G | CAT6 FTP |
| H | 1.5mm² |

SOLARONE.RO
SISTEME FOTOVOLTAICE

## Mode 3:

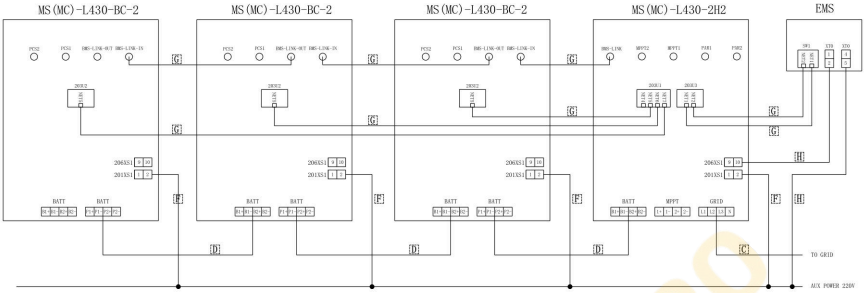


| Cable | Recommended size |
|---|---|
| C | 120mm² |
| D | 50mm² |
| F | 4 mm² |
| G | CAT6 FTP |
| H | 1.5mm² |

SOLAROFF.RO® SISTEME FOTOVOLTAICE

## 4.2.2.2 Wire connection guide:

**Note!**

- After wiring, pull out cables slightly to prove that they are connected securely.
- After completing the wire connection, use fire-resistant mud to seal the cable pass-through holes.

### How to position terminals related?

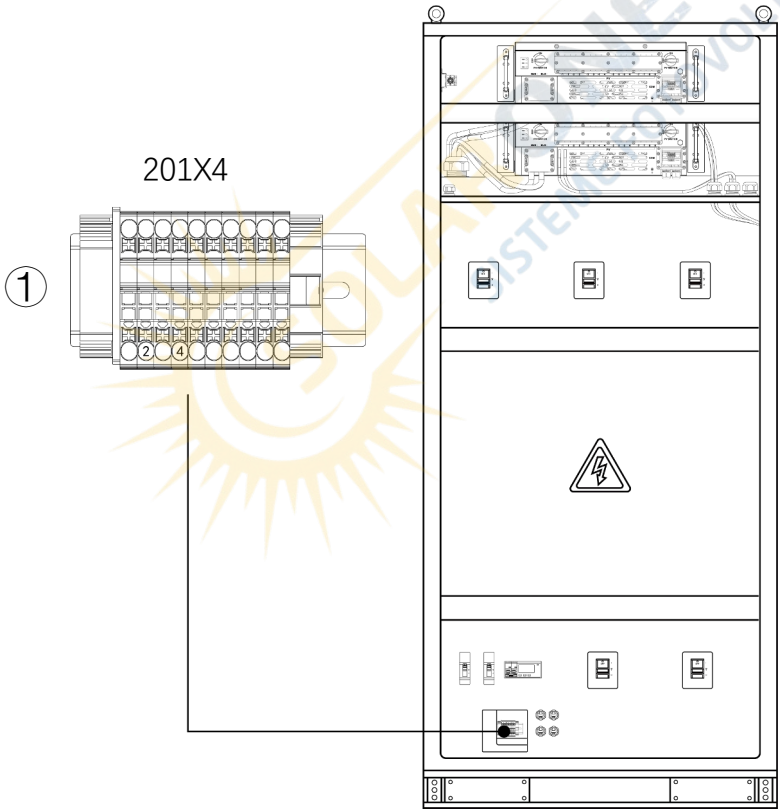

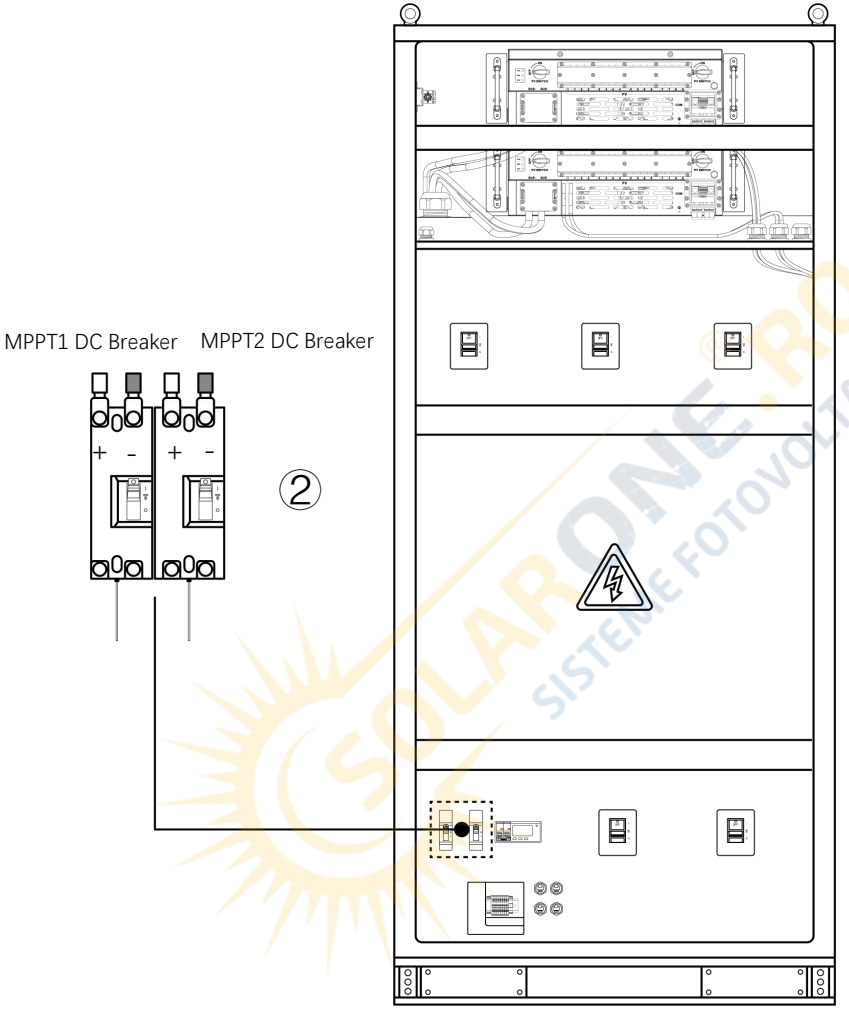
MPPT1 DC Breaker
MPPT2 DC Breaker
+
-
+
-
②

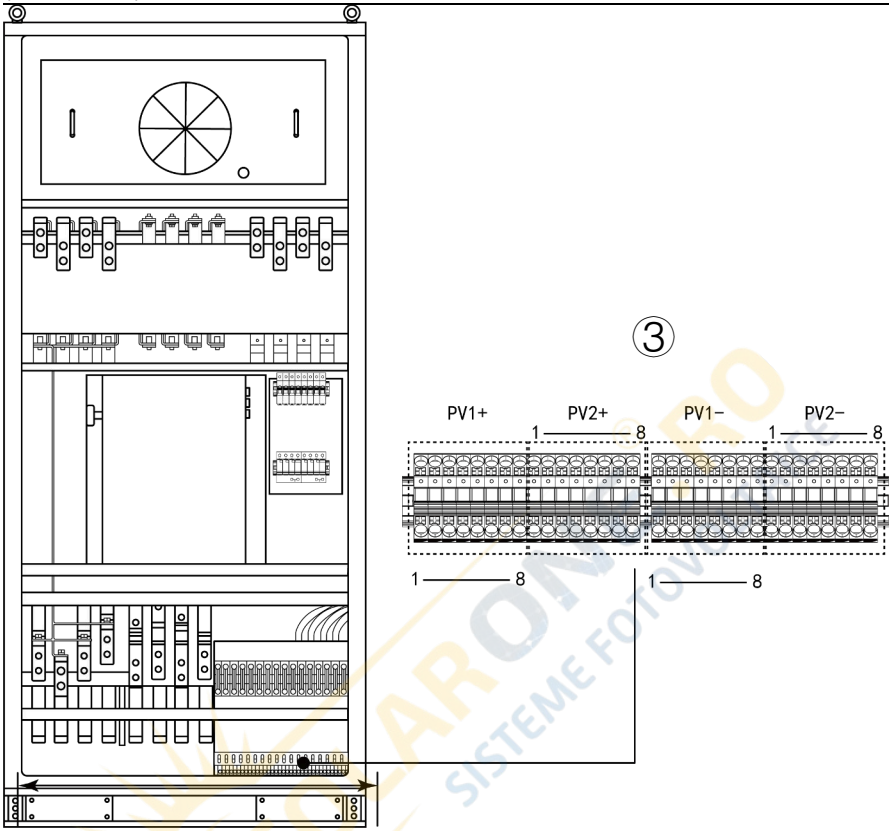
③
PV1+
PV2+
PV1−
PV2−
1
8
1
8
1
8
1
8

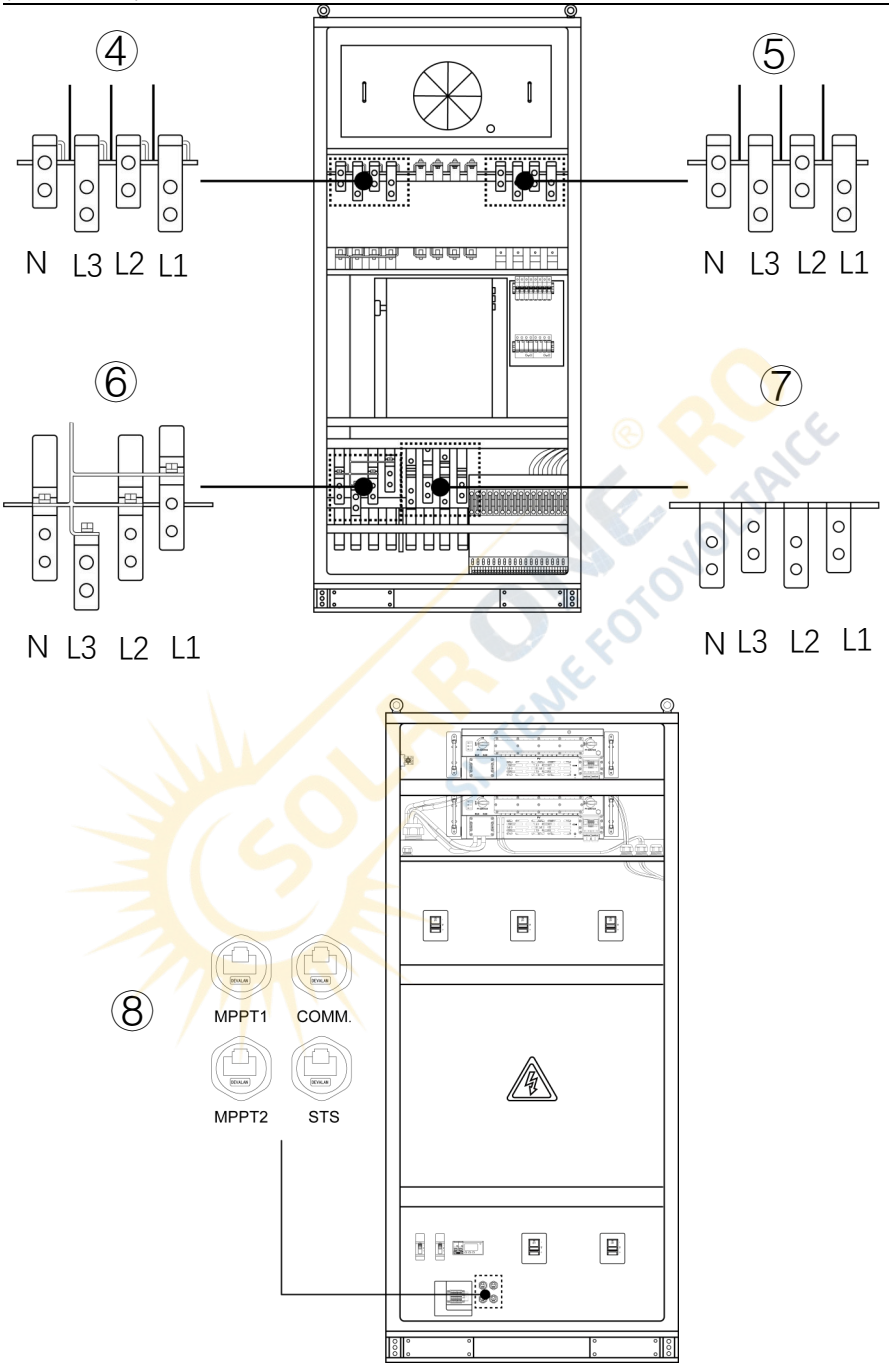
4
N L3 L2 L1
5
N L3 L2 L1
6
N L3 L2 L1
7
N L3 L2 L1
8
MPPT1
COMM.
MPPT2
STS

| Step | NO. | Port | Description | Recommendation |
|---|---|---|---|---|
| Step 1: Attach to auxiliary power | ①201X4 | 7 | Connecting with 213XS1:17 port of MC-L430-2H2 cabinet | Terminal: ENY1510 Cable: 1.5 mm² |
| | | 8 | Connecting with 213XS1:18 port of MC-L430-2H2 cabinet | |
| Step 2: Perform PV connection | ②MPPT DC Breaker | MPPT1+ | Connecting with MPPT1+ port of MC-L430-2H2 cabinet | Terminal: DT70-10 Cable: 70 mm² Bolt: M8 Torque: 12 N•m |
| | | MPPT1- | Connecting with MPPT1- port of MC-L430-2H2 cabinet | |
| | | MPPT2+ | Connecting with MPPT2+ port of MC-L430-2H2 cabinet | |
| | | MPPT2- | Connecting with MPPT2- port of MC-L430-2H2 cabinet | |
| | ③ PV | PV1+:1~8 | Connecting with PV1+ port of exterior photovoltaic system | Terminal: ENY10-18 Cable: 10 mm² |
| | | PV1-:1~8 | Connecting with PV1- port of exterior photovoltaic system | |
| | | PV2+:1~8 | Connecting with PV2+ port of exterior photovoltaic system | |
| | | PV2-:1~8 | Connecting with PV2- port of exterior photovoltaic system | |
| Step 3: Perform AC connection | ④ GRID | L1 | Connecting with L1 port of Grid | Terminal: DT120-10 Cable:120*2mm² Bolt: M10 Torque: 25 N•m |
| | | L2 | Connecting with L2 port of Grid | |
| | | L3 | Connecting with L3 port of Grid | |
| | | N | Connecting with N port of Grid | Terminal: DT70-10 Cable:70*2mm² Bolt: M10 Torque: 25 N•m |
| | ⑤ GEN | L1 | Connecting with L1 port of diesel generator | Terminal: DT120-10 Cable:120*2mm² Bolt: M10 Torque: 25 N•m |
| | | L2 | Connecting with L2 port of diesel generator | |
| | | L3 | Connecting with L3 port of diesel generator | |
| | | N | Connecting with N port of diesel generator | Terminal: DT70-10 Cable:70*2mm² Bolt: M10 Torque: 25 N•m |
| | | L1 | Connecting with L1 port of the load | Terminal: DT120-10 Cable:120*2mm² |
| | | L2 | Connecting with L2 port of the | |

| | | | | |
|---|---|---|---|---|
| | ⑥ Load | | load | Bolt: M10<br>Torque: 25 N•m |
| | | L3 | Connecting with L3 port of the load | |
| | | N | Connecting with N port of the load | Terminal: DT70-10<br>Cable:70*2mm²<br>Bolt: M10<br>Torque: 25 N•m |
| | ⑦ PCS | L1 | Connecting with GRID-L1 port of MC-L430-2H2 cabinet | Terminal: DT120-10<br>Cable:120*2mm²<br>Bolt: M10<br>Torque: 25 N•m |
| | | L2 | Connecting with GRID-L2 port of MC-L430-2H2 cabinet | |
| | | L3 | Connecting with GRID-L3 port of MC-L430-2H2 cabinet | |
| | | N | Connecting with GRID-N port of MC-L430-2H2 cabinet | Terminal: DT70-10<br>Cable:70*2mm²<br>Bolt: M10<br>Torque: 25 N•m |
| Step 4: Perform communication connection | ⑧ | MPPT1 | Connecting with 220XS1 port of MC-L430-2H2 | CAT5 E |
| | | MPPT2 | Connecting with 220XS2 port of MC-L430-2H2 | |
| | | COMM | Connecting with NET4 port of 8-port switch of the first MC-L430-2H2 | |
| | | STS | Connecting with 220XS3 port of MC-L430-2H2 | |

# 5 Operation Instructions

## 5.1 Powering on the Equipment

### 5.1.1 Check Before Power-On

**General Check**

| No. | Check Item | Acceptance Criteria |
|---|---|---|
| 1 | Appearance | • The equipment is intact and free from rust or paint flake-off. If the paint flakes off, repair the damaged paint.<br>• The labels on the device are clear. Damaged labels must be replaced. |
| 2 | Cable appearance | • Cable sheathings are properly wrapped and not damaged.<br>• Cable hoses are intact. |
| 3 | Cable connection | • Cables are connected in the designed positions.<br>• Terminals are prepared as required and securely connected.<br>• Labels on both ends of each cable are clear and specific, and attached in the same direction. |
| 4 | Cable routing | • Cables are neat and tidy.<br>• Cable tie joints are evenly cut without burrs.<br>• Cables are placed properly and with slack at bending points to avoid stress.<br>• Cables are routed neatly without twists or crossovers in the cabinets. |

**Cabinet**

| No. | Check Item | Acceptance Criteria |
|---|---|---|
| 1 | Installation | • The installation meets the design requirements.<br>• The cabinet is level, and each door opens normally. |
| 2 | Appearance | • The cabinet surface is free from cracks, dents, and scratches. If the paint flakes off, repair the damaged paint. |
| 3 | Cabinet grounding | • Ground the cabinet correctly according to the requirements of the power distribution system. |
| 4 | Accessory | • The number and positions of accessories installed meet design requirements. |
| 5 | Label | • All labels are correct, clear, and complete. |

**Interior**

| No. | Check Item | Acceptance Criteria |
|---|---|---|
| 1 | Cable | The bolts for installing the cables are tightened and the cables are not loose. |
| 2 | Cable hole sealing | Cable holes are sealed. |
| 3 | Components | All components are intact. |
| 4 | Foreign object | Foreign objects such as tools and remaining materials are cleared. |
| 5 | Meter | The meter is free from cracks, dents, and damage, and its buttons are normal. |
| 6 | Cabinet grounding | The ground conductor is securely connected to the ground terminal of the cabinet. |

## 5.1.2 Power-On Operations

**Danger!**

Wear insulated gloves and use insulated tools to prevent electric shocks or short circuits.

**Caution!**

- During the power-on procedure, monitor the system for faults. If you detect any faults, power off the equipment, rectify the faults, and then continue with the procedure.
- If the equipment has not been used for six months or longer after being installed, it must be checked and tested by professionals before operation.
- Turn on the circuit breaker only after you have confirmed that there is no short circuit or other fault to prevent the fault from spreading and causing safety risks.

**Notice!**

Before the equipment is put into operation for the first time, ensure that the parameters are set correctly by professional personnel. Incorrect parameter settings may result in noncompliance with local grid connection requirements and affect the normal operations of the equipment.

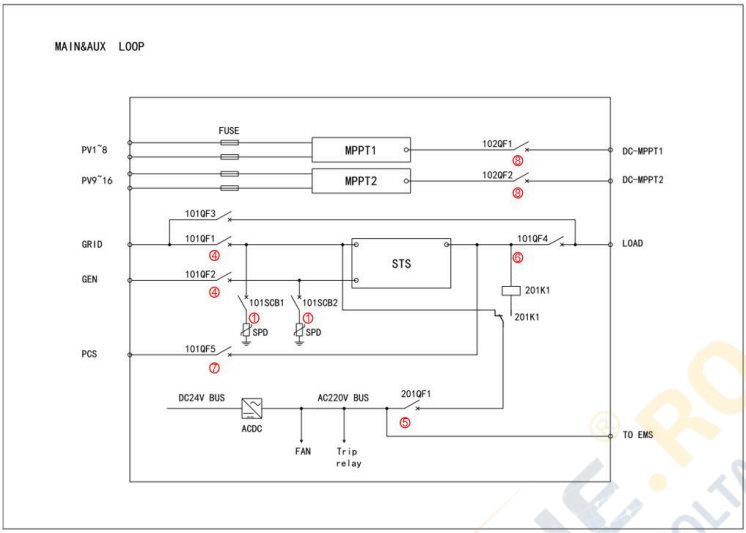


Figure.1

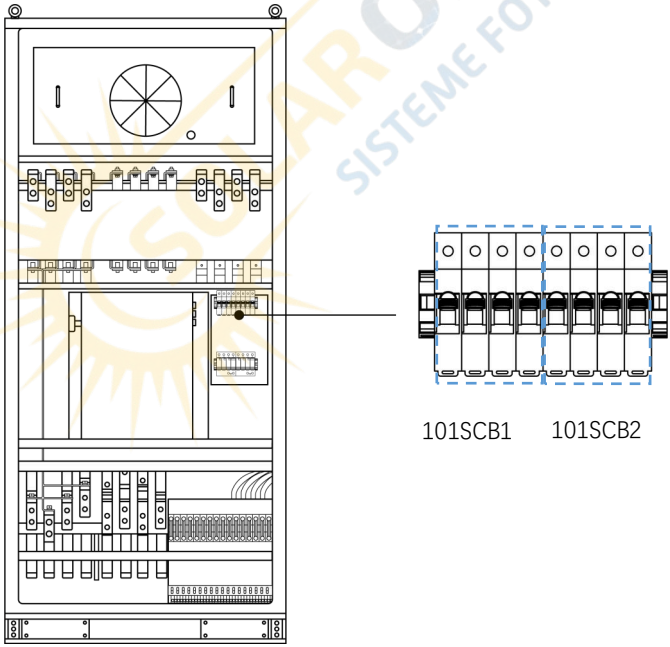


Figure.2

SOLARONE.RO
SISTEME FOTOVOLTAICE

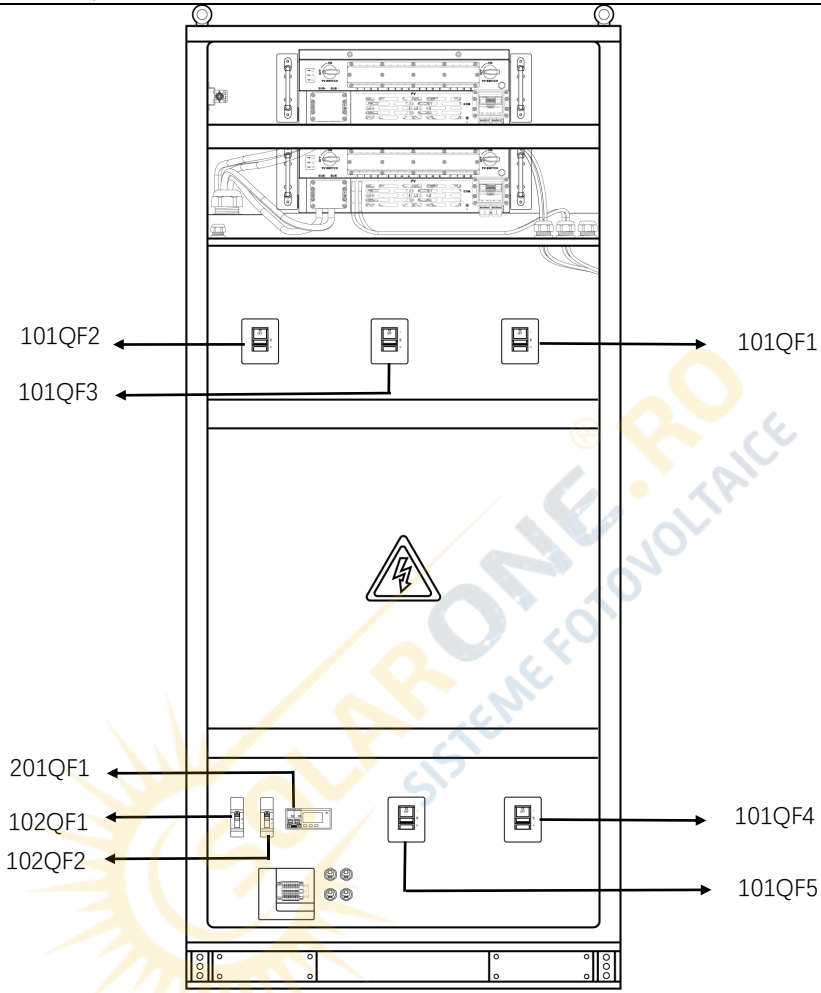


Figure.3

1. Turn on SPD breakers **101SCB1** and **101SCB2**. See the Figure.2.
2. Perform an visual inspection to ensure all breakers from **101QF1** to **101QF5** and from **102QF1** to **102QF2** are disconnected. See the Figure.3.
3. Have the external power grid and diesel generator energized, and measure whether the external voltage is normal by a multimeter.See the Figure.3.

4. Turn on circuit breakers **101QF1** and **101QF2**, and visually inspect whether the indicator lights of the power grid, diesel generator, and STS transfer switch are properly illuminated.See the Figure.3.
5. Turn on circuit breaker **201QF1** and visually inspect whether the 24V load indicator light is properly illuminated. See the Figure.3.

**The following steps should be carried out after the MC-L430-2H2 cabinet has been powered on**. (Note: Once communication between the PCS and STS is established, the internal contactors of the STS will close up, and power will be supplied to the STS output end.)

6. Turn on circuit breaker **101QF4** and visually inspect whether the load indicator light is properly illuminated. See the Figure.3.
7. Turn on circuit breakers **101QF5, 102QF1** and **102QF2**. See the Figure.3.

SOLARONE.RO
SISTEME FOTOVOLTAICE

# 5.2 Powering Off The Equipment

**Notice!**

Press the emergency stop switch (EPO) to stop the ESS only in emergency situations.

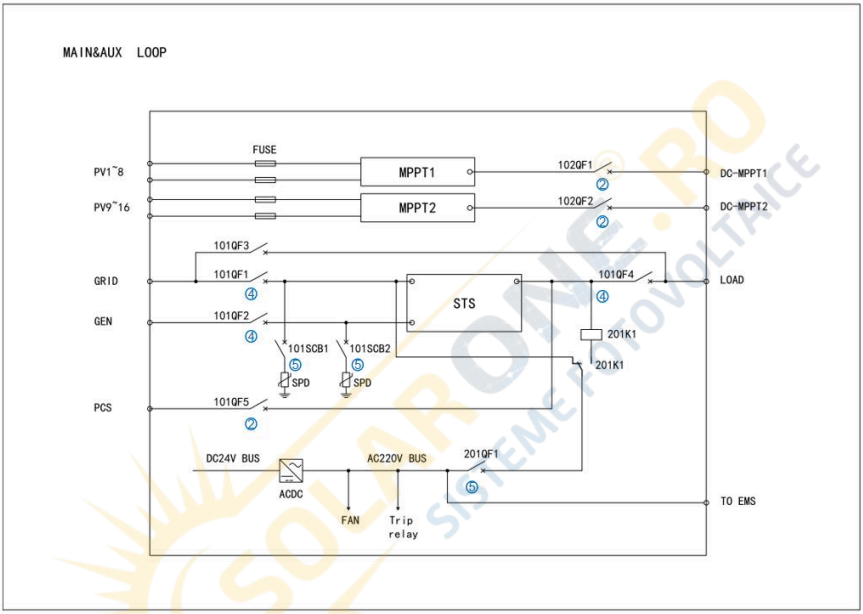


1. Make sure the entire system is in halt state.
2. Turn off circuit breakers **101QF5**, **102QF1** and **102QF2**. See the Figure.3.
3. Confirm that the load is disconnected or the current on the load side drops to 0A.
4. Turn off the breakers **101QF4, 101QF2, 101QF1** and **201QF1.**
5. Turn off the breakers**101SCB1** and **101SCB2.**

# 6 Maintenance

## 6.1 General Maintenance

**Danger!**

- Servicing should be performed or supervised by professional personnel.
- Wear personal protective equipment and use dedicated insulated tools to avoid electric shocks or short circuits
- Do not smoke or have an open flame around batteries.
- Do not use wet cloth to clean exposed copper bars or other conductive parts.
- Do not use water or any solvent to clean batteries.
- Charge your equipment in 48 hours after over-discharge.

**Warning!**

- Do not maintain batteries with power on. Before moving or reconnecting the equipment, disconnect the mains and batteries and wait for five minutes until the equipment powers off. Before maintaining the equipment, check that no hazardous voltages remain in the components to be maintained by using a multi-meters.
- Do not wear jewelry, watches and other metal jewelry when servicing.

**Caution!**

- Do not connect two or more cables to the positive or negative power port of a battery in parallel.
- Place a warning sign indicting that switch must not be turned on at the position where the switch resides.
- Use a electroscope of a proper voltage level to check whether the equipment is energized and ensure that the equipment is completely powered off.

- Before performing maintenance or repair, securely connect the loop to be repaired to the main ground loop using a ground cable.
- After the maintenance or repair is complete, remove the ground cable between the loop that has been maintained and the main ground loop.
- Stay away from the equipment when preparing cables to prevent cable scraps from entering the equipment. Cable scraps may cause sparks and result in personal injury and equipment damage.
- Cables should be inserted and removed in accordance with regulations. Violent or brute force operations are prohibited.
- After the maintenance is complete, clean the tools and materials in time, and check whether metal objects remain inside or on the top of the product.
- When replacing batteries, replace with the same type of spare parts.
- Do not open or damage batteries. Released electrolyte is harmful to the skin and eyes. It may be toxic.
- If you have any questions about the operation and maintenance of this product, please contact the customer service center. Do not operate without authorization.

SOLARONE.RO
SISTEME FOTOVOLTAICE

# 6.2 Maintenance Schedule

## 6.2.1 Routine Maintenance

| Maintenance Category | Maintenance Action | Expected Result |
|---|---|---|
| System | Log in to the system management platform (WEB/EMS/APP, etc.) to view system alarm information | ●NO primary or secondary alarm info. |
| Indicator | Check that indicators are in normal state. | ● The indicator stays green when the system runs normally.<br>● The indicator stays red when the system error occurs<br>● The indicator stays blue when the system is in standby mode.<br>● The indicator stays yellow to emit an alarm to the operator. |
| Outside the cabinet | Check that there are any foreign objects wrapped around the cabinet | ●The cabinet is never wrapped around or covered by any foreign objects. |
| Inside the cabinet | Perform an inspection:<br>● Temperature<br>● Humidity | ●Check that the temperature and humidity inside the cabinet are in reasonable ranges. |

### 6.2.2 Quarterly Maintenance

| Maintenance Category | Maintenance Action | Expected Result |
|---|---|---|
| Safety inspection | Check that switches to shut off the equipment can work normally | ●Switches can work normally |
| Cabinet | Perform the visual inspection:<br>● Appearance<br>● Rust condition<br>● Door lock<br>● Vent<br>● Fasteners<br>● Settings | ● There is no obvious paint peeling or rust.<br>● The door locks are not damaged.<br>● There is no dust at the vents.<br>● There are no insects, rodents, snakes or other animals.<br>● All fasteners are secured firmly.<br>● All technical settings can support the normal run of the equipment. |

### 6.2.3 Semi-annual Maintenance

| Maintenance Category | Maintenance Action | Expected Result |
|---|---|---|
| Outside the cabinet | Perform the visual inspection:<br>● Inflammable materials. | There is no any inflammable objects around the cabinet. |
| Cabinet | Perform the visual inspection:<br>● Appearance<br>● Rust condition<br>● Door lock<br>● Vent<br>● Fasteners<br>● Settings | ● There is no obvious paint peeling or rust.<br>● The door locks are not damaged.<br>● There is no dust at the vents.<br>● There are no insects, rodents, snakes or other animals.<br>● All fasteners are secured firmly.<br>● All parameter settings can support the normal run of the equipment. |
| Cables | ● Check whether cables are securely connected.<br>● Check whether cables are damaged, especially whether the cable sheath that contacts a metal surface is damaged.<br>● Check whether | ●Cables are securely connected.<br>●No damages are found on the cables.<br>●No water enters the equipment and contacts with cables.<br>●There are no insulating tape is peeling off. |

| | | |
|---|---|---|
| | water is entering into the ESS<br>● Check whether any insulating tape on terminals is not detached.<br>● Check whether all cables are routed correctly. | ●Cable routing is performed correctly and reasonably |
| Protective components | Perform an inspection:<br>●Smoke detector and heat detector<br>●Water detector<br>●SPD | ●Confirm the operational status of smoke and heat detectors, as well as the ability of the ventilation fan to start correctly.<br>●Conduct a drip test to ensure the water sensor alarms appropriately.<br>●Validate the integrity and functionality of surge protection devices and fuses |

### 6.2.4 Annual Maintenance

| Maintenance Category | Maintenance Action | Expected Result |
|---|---|---|
| Outside the cabinet | Perform the visual inspection:<br>● Inflammable materials. | There is no any inflammable objects around the cabinet. |
| Cabinet | Perform the visual inspection:<br>● Appearance<br>● Rust condition<br>● Door lock<br>● Vent<br>● Fasteners<br>● Settings | ● There is no obvious paint peeling or rust.<br>● The door locks are not damaged.<br>● There is no dust at the vents.<br>● There are no insects, rodents, snakes or other animals.<br>● All fasteners are secured firmly.<br>● All technical settings can support the normal run of the equipment. |
| Cables | ● Check whether cables are securely connected.<br>● Check whether cables are damaged, especially whether the cable sheath that contacts a metal surface is damaged.<br>● Check whether water is entering into the ESS<br>● Check whether any | ●Cables are securely connected.<br>●No damages are found on the cables.<br>●No water enters the equipment and contacts with cables.<br>●There are no insulating tape is peeling off. |

| | | |
|---|---|---|
| | insulating tape on terminals is not detached.<br>● Check whether all cables are routed correctly. | ●Cable routing is performed correctly and reasonably |
| Protective components | Perform an inspection:<br>●Smoke detector and heat detector<br>●Water detector<br>●SPD | ●Confirm the operational status of smoke and heat detectors, as well as the ability of the ventilation fan to start correctly.<br>●Conduct a drip test to ensure the water sensor alarms appropriately.<br>●Validate the integrity and functionality of surge protection devices and fuses |
| Alert labels | ●Check the warning labels. | ●All warning labels are visible, and no damages or stains on them. |
| Fire-resistant mud/Foundation | Perform an inspection:<br>●Fire-resistant mud<br>●Foundation | ● The fire-resistant mud exhibits excellent adhesion.<br>● The foundation is intact with a smooth surface |

# 7 Troubleshooting

When any error exists in your equipment, please contact the service center or service engineers for help.

SOLARONE.RO®
SISTEME FOTOVOLTAICE

# 8 Repair Paint Damage

## 8.1 Prerequisites

• Do not apply paint in bad weather, such as rain, snow, strong wind, and sandstorm, when there is no shelter outdoors.
• You have prepared the required paint that matches the color palette delivered with equipment.

## 8.2 Paint Repair Description

The equipment appearance should be intact. If paint has flaked off, repair paint damage immediately.

**Note!**

Check the paint damage on the equipment and prepare appropriate tools and materials. The number of materials depends on site requirements.

SOLARONE.RO® SISTEME FOTOVOLTAICE

## 8.2.1 Paint repair description

<table>
<tr><th>Paint Damage</th><th>Tool and Material</th><th>Procedure</th><th>Description</th></tr>
<tr><td>Slight scratch (steel base material not exposed)</td><td rowspan="2">Spray paint or paint, brush (required for repainting a small area), fine sandpaper, anhydrous alcohol, cotton cloth, and paint spray gun (required for repainting a large area)</td><td rowspan="2">Steps 1, 2, 4, and 5</td><td rowspan="5">1. For a few scratches, smudges, or rust, manual paint spraying or brushing is recommended.<br>2. For many scratches or large-area smudges and rusts, use a paint spray gun.<br>3. The paint coating should be thin and even. Paint drops are prohibited on the coating. The surface should be smooth.<br>4. Leave the repainted area for approximately 30 minutes before performing any further operation.</td></tr>
<tr><td>Smudges and rust that cannot be removed</td></tr>
<tr><td>Deep scratch (primer damaged, steel base material exposed)</td><td>Spray paint or paint, zinc-rich primer, brush (required for repainting a small area), fine sandpaper, anhydrous alcohol, cotton cloth, paint spray gun (required for repainting a large area)</td><td>Steps 1, 2, 3, 4, and 5</td></tr>
<tr><td>Logo and pattern damage</td><td colspan="2">If a logo or pattern is damaged, provide the logo size and color number. Seek help from a local supplier of advertisement coatings to formulate a repair solution based</td></tr>
</table>

| | | |
|---|---|---|
| | on the logo size, color, and damage. | |
| Dent | If a dent is less than or equal to 100 $mm^2$ in area and less than 3 mm in depth, fill the dent with Poly-Putty base and then perform the same operations as those for processing deep scratches.<br>If a dent is greater than 100 mm2 in area or greater than 3 mm in depth, ask the local supplier for an appropriate repainting solution. | |

SOLARONE.RO® SISTEME FOTOVOLTAICE

## 8.2.2 Procedure

1. Gently polish damaged areas using fine sandpaper to remove smudges or rust.

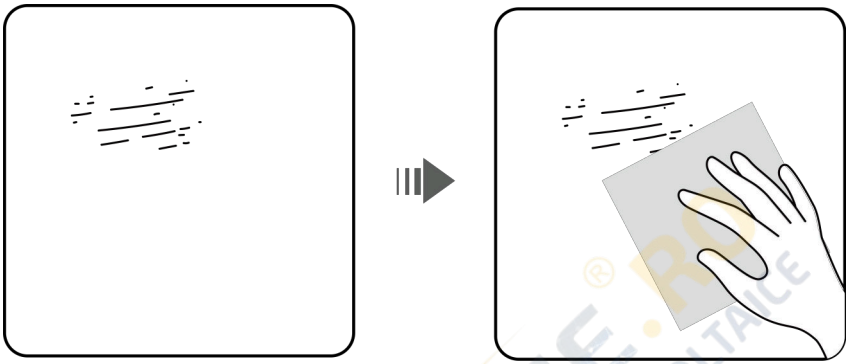

2. Dip a piece of cotton cloth into anhydrous alcohol and wipe the polished or damaged area to remove the dirt and dust. Then wipe off the anhydrous alcohol with a clean and dry cotton cloth.

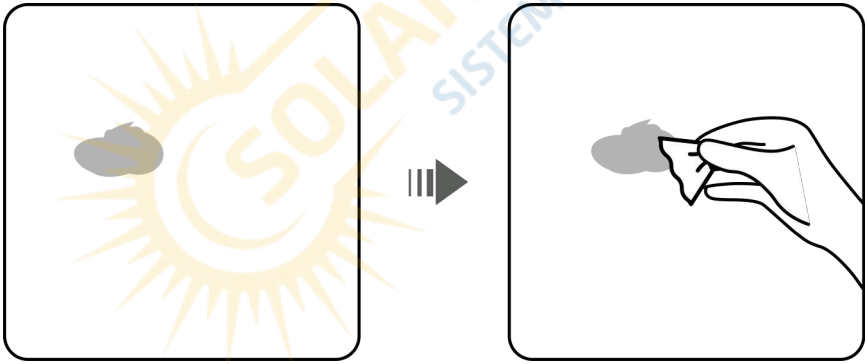

3. Paint zinc-rich primer on the damaged coat using a brush or paint spray gun.

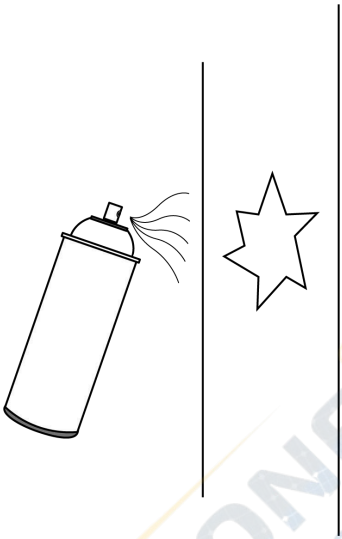

**Notice!**

• If the base material is exposed in the area to be repaired, apply epoxy zinc-rich primer, wait until the paint has dried, and then apply acrylic acid top coat.

• Select epoxy zinc-rich primer or acrylic acid top coat with a color the same as the surface coating color of the equipment.

4. Apply paint evenly to the damaged area based on the damage degree of the paint using an aerosol spray, brush, or paint spray gun until all damage traces are invisible.

**Notice!**

• Ensure that the painting is thin, even, and smooth.

• In the case that an equipment pattern has different colors, to prevent undamaged areas and those with different colors as the damaged area from being contaminated during repainting, cover such areas using white paper and adhesive tape before repairing paint.

SOLARONE.RO SISTEME FOTOVOLTAICE

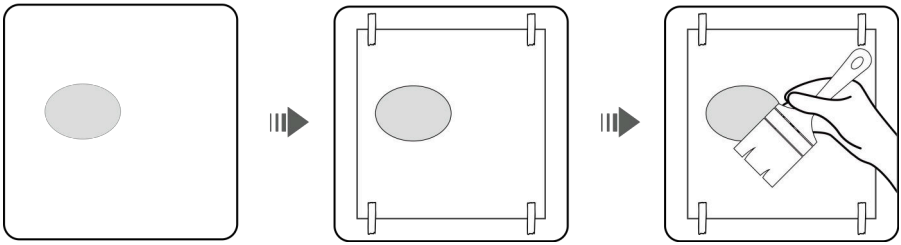

5. Wait for 30 minutes and check whether the painting meets the requirements.

**Note!**

• The color of the repainted area must be consistent with that of the surrounding area. Make sure that there is no visible edge between the repainted area and the surrounding area. The paint should be free of bulges, scratches, flaking, or cracks.

• If you choose to spray paint, it is recommended that you spray paint three times before checking the result. If the color does not meet the requirements, paint more times until the painting meets the requirements.

SOLARONE.RO® SISTEME FOTOVOLTAICE

# 9 Emergency Handling

If an accident (including but not limited to the following) occurs on the site, ensure the safety of onsite personnel first and contact the service engineers.

## 9.1 Strong Impact

• If the equipment has obvious damage or abnormal odor, smoke, or fire occurs, evacuate the personnel immediately, call emergency services, and contact the professionals. The professionals shall use fire extinguishing facilities to extinguish the fire under safety protection.

## 9.2 Flood

• Power off the system if it is safe to do so.

• If any part of the equipment is submerged in water, do not touch it to avoid electric shock.

• Do not force the equipment that have been soaked in water. Contact the customer service center for help.

SOLARONE.RO SISTEME FOTOVOLTAICE

# 9.3 Fire

**Suggestions for onsite O&M personnel:**

• When a fire occurs, evacuate from the building or equipment area, press the fire alarm bell, and immediately call the fire emergency service. Notify the professional firefighters and provide them with relevant product information, including but not limited to product types, capacity, and so on.

• Do not enter the affected building or equipment area under any circumstances, and do not open the doors of the equipment. Isolate and monitor the site. Keep irrelevant personnel away from the site.

• After calling the fire emergency service, remotely power off the system while ensuring your own safety.

• After professional firefighters arrive, provide relevant product information, including but not limited to product types, capacity, user manuals and so on.

• After the fire is extinguished, the site must be handled by professionals in accordance with local laws and regulations. Do not open the doors of the equipment without permission.

• Post-disaster product maintenance: Contact the service engineers for evaluation.

**Suggestions for professional firefighters:**

• For product information, see the information provided by O&M personnel, including but not limited to product types, capacity, user manuals and so on.

• Do not open the doors of the equipment before it is deemed safe by professionals.

• Follow local fire fighting regulations.

• When a fire occurs, prevent the fire from spreading to nearby the equipment.

# 10 Storage

**Note!**

- Only trained and qualified personnel are allowed to operate the equipment. Wear insulated gloves and use dedicated insulated tools during the operation.

- The storage environment must comply with local regulations and standards.

- You are advised to store the equipment in a dry, clean, and ventilated indoor environment that is free from sources of strong infrared or other radiations, organic solvents, corrosive gases, and conductive metal dust. Keep the equipment far away from sources of heat and fire.

- Store the equipment separately to avoid mixing with other equipment. The site must be equipped with qualified fire fighting facilities, such as fire sand and fire extinguishers.

- The equipment must be disconnected from external equipment during storage, and the equipment indicators must be off.

Place the equipment correctly according to the signs on the packing case during storage. Do not place the equipment upside down, lay it on one side, or tilt it.

The packaging signs are described as follows.

| Name | Symbol | Description |
|---|---|---|
| Up | 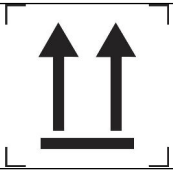 | The package shall be kept upright during transportation and storage. |

| | | |
|---|---|---|
| Fragile | | The package contains fragile objects and shall be handled with care. |
| Keep dry | | The package shall be protected against rain, and rainproof measures shall be taken during transportation and storage. |
| Do not roll | | The package shall not be rolled during transportation. |
| Do not stack | | The package shall not be stacked. |

- Do not unpack the equipment if it will be stored for a long time.
- Do not stack the equipment.
- Ensure that the ground surface is flat (for long-term or temporary storage).
- Refer to the section “Technical Specification” for storage temperature and humidity.
- Close the cabinet door.
- For long-term storage (more than six months after delivery), replace the desiccants with those of the same specifications and amount.

SOLARONE.RO® SISTEME FOTOVOLTAICE

- If the equipment has been stored for longer than allowed, promptly report the condition to the person in charge.

- Handle the equipment with care to prevent damage.

SOLARONE.RO®
SISTEME FOTOVOLTAICE

# 11 Transport

1. The products should be transported after packaging and during the transportation process. Severe vibration, impact, or extrusion should be prevented to prevent sun and rain. It can be transported using vehicles such as cars, trains, and ships.
2. Always check all applicable local, national, and international regulations before transporting the product.
3. Transporting an end-of-life, damage may, in certain cases, be specially limited or prohibited.
4. Transportation and storage service providers must have the certification for dangerous goods operations required by local laws, regulations, and standards.
5. Before transportation, make a compliant and accurate declaration. Ensure that the packaging, labels, and markings are intact and there is no abnormal smell, leakage, smoke, or fire. Otherwise, the equipment must not be transported.
6. Exercise caution when moving the product to prevent bumping and ensure personal safety.
7. Unless otherwise specified, dangerous goods must not be mixed with goods containing food, medicine, animal feed, or their additives in the same vehicle or container, and sharp objects are not allowed in the same vehicle or container.

Store the product in a separate area away from heat sources. Protect the product from moisture, water, and rain.

SOLARONE.RO SISTEME FOTOVOLTAICE

# 12 Technical Specifications

| Model | MS-MPPT400-2 |
|---|---|
| **System parameter** | |
| Dimension ( W × D × H, mm ) | 1100 × 1100 × 2450 |
| Weight Appr. ( kg ) | ≤950kg |
| System Operating temperature range | -30℃ ~ 50℃ |
| Max. working altitude ( m ) | ≤2000m |
| IP Rating of Enclosure | IP54 |
| **STS parameters** | |
| Rated insulation voltage ( V ) | DC1000 |
| Rated working voltage ( V ) | AC400 |
| Auxiliary equipment operating voltage ( V ) | AC220, DC24 |
| Frequency | 50/60Hz |
| Rated power of load ( kW ) | 250 |
| Rated power of the power grid ( kW ) | 500 |
| Rated power of oil engine ( kW ) | 500 |
| Switching Time | ≤15ms |
| **MPPT parameters** | |
| Max. PV Input Power ( kW ) | 2*200 |
| Max. PV Input Voltage ( V ) | 1000 |
| Start-up Voltage ( V ) | 200 |
| MPPT Voltage Range ( V ) | 180 ~ 850 |
| Full Load MPPT Voltage Range ( V ) | 450 ~ 850 |
| Rated PV Input Voltage ( V ) | 600 |
| Max. Operating PV Input Current ( A ) | (40+40+40+40+40+40+40+40)*2 |
| Max. Input Short-Circuit | (60+60+60+60+60+60+60+60)*2 |

SOLARONE.RO
SISTEME FOTOVOLTAICE

| | |
|---|---|
| Current ( A ) | |
| No.of MPP Trackers | 8*2 |
| Max. Efficiency | >99% |
| MPPT Efficiency | >99.9% |

SOLARONE.RO® SISTEME FOTOVOLTAICE

Service Hotline: +86-0574-86320560

Email: service-ess@deye.com.cn

Website: http://deyeess.com

SOLARONE.RO
SISTEME FOTOVOLTAICE