Installation and Operation Instructions

LITHIUM STORAGE SYSTEM

BOS-G Pro

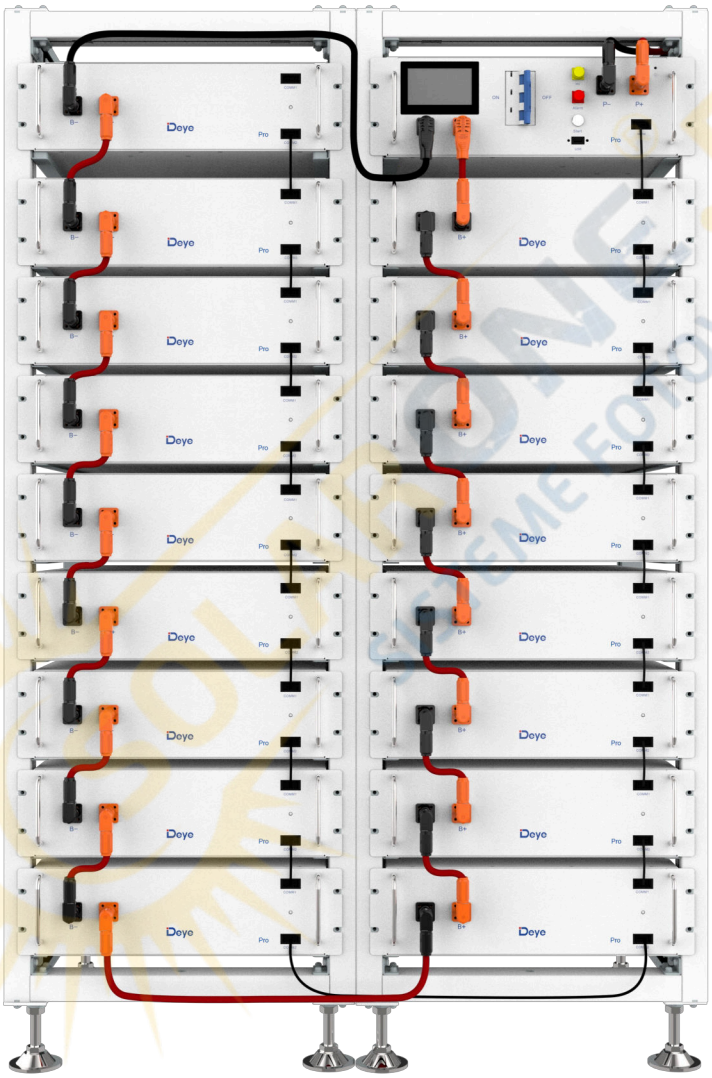

Version： V1.0

CONTENT

1.Important information in the manual 1
1.1 Scope 1
1.2 Description of BOS-G Pro 1
1.3 Meaning of Symbols 2
1.4 General Safety Information 4
1.5 Disclaimer 4
1.6 Installation environment 5
1.7 Quality Certificate 6
1.8 Requirements for Installation Personnel 6
2. Safety 8
2.1 Safety rules 8
2.2 Safety information 8
3. Transport to the end customers 10
3.1 Provisions on Shipping of Battery Modules 10
3.2 Storage Position of the battery packaging module 11
4. Description and installation of BOS-G Pro battery 13
4.1 Installation Precautions 13
4.2 BOS-G Pro Product Description 13
4.2.1 Product introduction 13
4.2.2 Product selection 15
4.3 Technical Data 18
4.4 Preparation 19
4.4.1 Tools required 19
4.4.2 Auxiliary Tools and Materials Required 19
4.5 Description of Rack 20
4.5.1 3U-HRack Parts description 20
4.5.2 Installation of Rack 21
4.6 Description of Battery Module 22

SOLARONE.RO SISTEME FOTOVOLTAICE

4.7 Description of High-Voltage Control Box 23
4.8 Description of Battery Module in Rack 25
4.9 Wrong wiring method 28
4.10 Installation of the Battery Module to the Rack 29
4.10.1 Cable connection 31
4.10.2 Battery installation cable Description 33
4.11 Battery cluster connected to inverter 35
4.12 System startup and shutdown 40
4.13 Procedure for configuring battery packs 41
4.14 External 12V Power Supply of High-Voltage Control Box 42
5. BOS-G Pro User Interface 43
5.1. Main Interface 43
5.2 Description of User Interface 43
5.3 Fault viewing interface 44
5.4 Maintenance Interface 46
6. BOS-G Pro fault description 47
7. Summary of fault types in BOS-G Pro's screen and HVESS-Monitor 50
8 Maintenance and upgrade 52
8.1 Maintenance of BOS-G Pro 52
8.2 USB's Upgrade Step 53
9. Battery Module Storage 54
10. Disposal 55
11. Legal notice 56

1.Important information in the manual

1.1 Scope

The installation and operation manual applies to the modular battery energy storage system. Please carefully read this installation and operation manual to ensure the safe installation, preliminary debugging, and maintenance of BOS-G Pro. Installation, preliminary debugging, and maintenance must be carried out by qualified and authorized personnel. Please keep this installation and operation manual and other applicable documents near the battery energy storage system, so that all personnel involved in installation or maintenance can access this installation and operation manual at any time.

This installation and operation manual only applies to countries meeting the certification requirements. Please observe the applicable local laws, regulations, and standards. Standards and legal Provisions of other countries may be inconsistent with the Provisions and specifications in this manual. In this case, please contact our after-sales service personnel, hotline: +86 0574 8612 0560, email: service-ess@deye.com.cn.

1.2 Description of BOS-G Pro

Model	System energy (kWh)	Rated DC power (kW)	Discharge depth	Composition
BOS-G25-Pro	25.6	25.6	90%	BOS-G-PACK5.1*5+BOS-G Pro-2 1000V/100A*1
BOS-G30-Pro	30.72	30.72	90%	BOS-G-PACK5.1*6+BOS-G Pro-2 1000V/100A*1
BOS-G35-Pro	35.84	35.84	90%	BOS-G-PACK5.1*7+BOS-G Pro-2 1000V/100A*1
BOS-G40-Pro	40.96	40.96	90%	BOS-G-PACK5.1*8+BOS-G Pro-2 1000V/100A*1
BOS-G45-Pro	46.08	46.08	90%	BOS-G-PACK5.1*9+BOS-G Pro-2 1000V/100A*1
BOS-G50-Pro	51.2	51.2	90%	BOS-G-PACK5.1*10+BOS-G Pro-2 1000V/100A*1
BOS-G55-Pro	56.32	56.32	90%	BOS-G-PACK5.1*11+BOS-G Pro-2 1000V/100A*1
BOS-G60-Pro	61.44	61.44	90%	BOS-G-PACK5.1*12+BOS-G Pro-2 1000V/100A*1
BOS-G65-Pro	66.56	66.56	90%	BOS-G-PACK5.1*13+BOS-G Pro-2 1000V/100A*1
BOS-G70-Pro	71.68	71.68	90%	BOS-G-PACK5.1*14+BOS-G Pro-2 1000V/100A*1
BOS-G75-Pro	76.8	76.8	90%	BOS-G-PACK5.1*15+BOS-G Pro-2 1000V/100A*1
BOS-G80-Pro	81.92	81.92	90%	BOS-G-PACK5.1*16+BOS-G Pro-2 1000V/100A*1
BOS-G85-Pro	87.04	87.04	90%	BOS-G-PACK5.1*17+BOS-G Pro-2 1000V/100A*1

1.3 Meaning of Symbols

This manual contains the following types of warnings:

Danger! It may cause an electric shock.

Even when the equipment is disconnected from the power grid, the voltage-free state will have a time lag.

Danger! If the instructions are not observed, death or severe injury may occur.

Warning! If the instructions are not observed, a loss may occur.

Attention! This symbol represents information on the device use.

Symbols on equipment:

The following types of warning, Prohibition, and mandatory symbols are also used on the equipment.

Attention! The risk of chemical burns

If the battery is damaged or fails, it may lead to electrolyte leakage, which in turn causes the formation of a small amount of hydrofluoric acid, among other effects. Contact with these liquids can cause chemical burns.

• Do not subject the battery module to severe impact.

• Do not open, disassemble or mechanically change the battery module.

• In case of contact with an electrolyte, wash the affected area with clean water immediately and seek medical advice Promptly.

Attention! The risk of explosion

Incorrect operation or fire may cause the lithium-ion battery unit to ignite or explode, leading to serious injury.

• Do not install or operate the battery module in explosive or high-humidity areas.

• Store the battery module in a dry place within the temperature range specified in the data sheet.

• Do not open, drill through or drop the battery cell or module.

• Do not expose the battery cell or module to high temperatures.

• Do not throw the battery cell or module into the fire.

• When the lithium battery catches fire after being plugged in with AC power, unplug the power supply first to prevent electric shock during fire fighting.

• If there is an open flame, use carbon dioxide or ABC dry powder fire extinguisher to put out the fire, and then cool down by using the nearby fire hydrant or pouring water until no white smoke appears and the battery is completely cooled down. After extinguishing the fire, continue to monitor the battery for at least 1 hour to prevent re-ignition.

• If there is no open flame but a large amount of white smoke comes out of the battery, it is recommended to use a 6L portable water-based fire extinguisher (if any), and then cool down by using the nearby fire hydrant or pouring water until no white smoke appears and the battery is completely cooled down. After extinguishing the fire, continue to monitor the battery for at least 1 hour to prevent re-ignition.

• Do not use defective or damaged battery modules.

Caution! Hot surface

• If a malfunction occurs, the parts will become very hot, and touching them may cause serious injury.

• If the energy storage system is defective, please shut it down immediately.

• If the fault or defect becomes obvious, special care should be taken when handling the equipment.

No open fire! It is Prohibited to handle open flames and ignition sources near the energy storage system.

Do not insert any objects into the opening in the housing of the energy storage system!

No objects, such as screwdrivers, may be inserted through openings in the casing of the storage system.

Wear safety goggles! Wear safety goggles when working on the equipment.

Follow the manual! When working and operating the equipment, the installation and operation manual Provisions must be observed.

1.4 General Safety Information

Danger! Failure to comply with the safety information can lead to life-threatening situations.

1. ImProper use can cause death. Operators of BOS-G Pro must read this manual and observe all safety information.

2. Operators of BOS-G Pro must comply with the specifications in this manual.

3. This manual cannot describe all conceivable situations. For this reason, applicable standards and relevant occupational health and safety regulations are always given priority.

4. In addition, the installation may involve residual hazards in the following circumstances:

• Incorrect installation.

• The installation is carried out by personnel who did not receive relevant training or guidance.

• Failure to observe the warnings and safety information in this manual.

If there are any questions, please contact Deye after service.

1.5 Disclaimer

DEYE ESS TECHNOLOGY CO., LTD shall not be liable for personal injury, Property loss, Product damage and subsequent losses under the following circumstances.

• Failure to comply with the Provisions of this manual.

• Incorrect use of this Product.

• Unauthorized or unqualified personnel repair the Product, disassembly the rack and perform other operations.

• Use of unapProved spare parts.

• Unauthorized modifications or technical changes to the Product.

1.6 Installation environment

• The battery energy storage system can only be installed and operated in an enclosed space. The working environment temperature range of BOS-G Pro is -20 ℃ ~ 55 ℃ , and the maximum humidity is 85%. The battery module shall not be exposed to the sun or placed directly beside the heat source.

• The battery module shall not be exposed to a corrosive environment.

• When installing the battery energy storage system, ensure that it stands on a sufficiently dry and flat surface with sufficient bearing capacity. Without the manufacturer's written apProval, the installation site's altitude shall not be higher than 3,000 meters. The output power of the battery decreases with the altitude.

• In areas where flooding may occur, care must be taken to ensure that the battery module is installed at a suitable height and to prevent its contact with water.

• The battery energy storage system must be installed in a fireProof room. This room must have no fire source and must be equipped with an independent fire alarm device, which complies with local applicable regulations and standards. According to local applicable regulations and standards, the room must be separated by the T60 fire door. Similar fire-Proof requirements apply to other openings in the room (such as windows).

Compliance with the specifications in this manual is also part of Proper use.

The use of the BOS-G Pro system is Prohibited in the following circumstances:

• Mobile use on land or in the air (use on water only with the manufacturer's consent and with the manufacturer's written consent).

• Used in medical devices.

• Used as a UPS system.

Minimum Product installation distance

The minimum distance to the surrounding building when the battery is installed is 100mm, and the minimum distance between the two Products is 100mm.

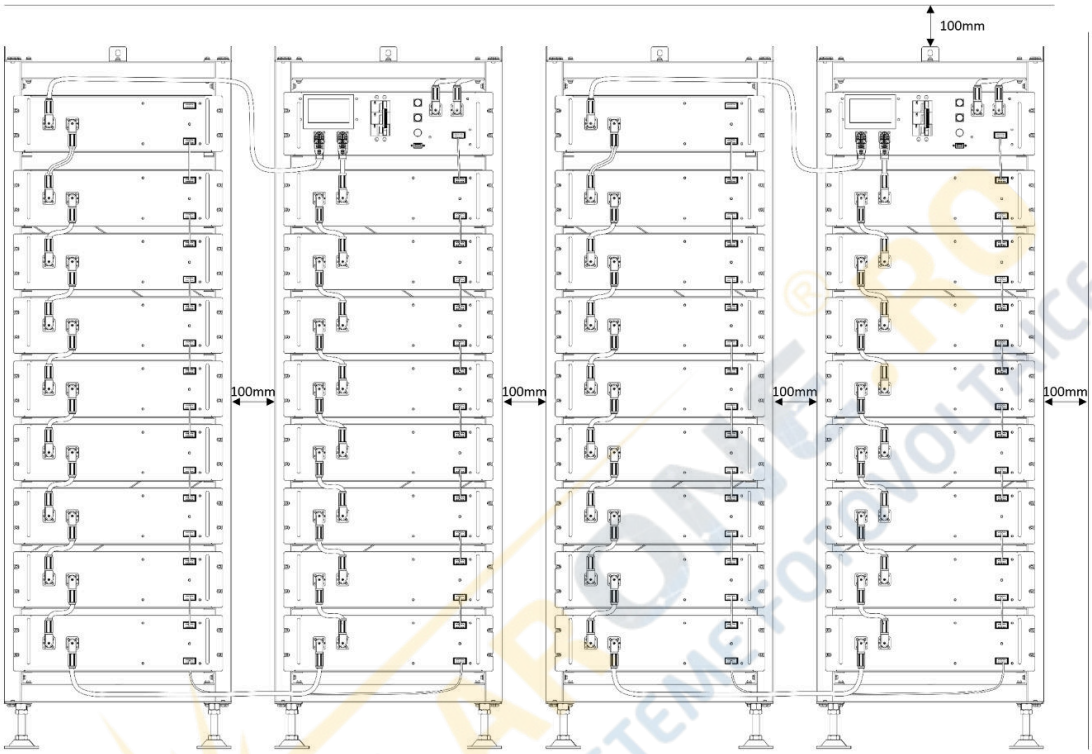

1.7 Quality Certificate

The quality certificate can be downloaded from www.deyeess.com.

1.8 Requirements for Installation Personnel

All work shall comply with local applicable regulations and standards.

The installation of BOS-G Pro can only be completed by electricians with the following qualifications:

• Trained in dealing with hazards and risks associated with the installation and operation of electrical equipment, systems, and batteries.

• Trained on installation and debugging of electrical equipment.

• Understanding and complying with the technical connection conditions, standards, guidelines, regulations, and laws applicable.

• Knowledge of handling lithium-ion batteries (transportation, storage, disposal, hazard source).

• Understanding and complying with this document and other applicable documents.

SOLARONE.RO® SISTEME FOTOVOLTAICE

2. Safety

2.1 Safety rules

To avoid Property damage and personal injury, the following rules shall be followed when working on the hazardous live parts of the battery energy storage system:

• It is available for use.

• Ensure that it will not restart.

• Make sure there is no voltage.

• Grounding Protection and short circuit Protection

• Cover or shield adjacent live parts.

2.2 Safety information

Part damage or short circuit may cause electric shock and death. A short circuit can be caused by connecting battery terminals, resulting in current flow. This type of short circuit shall be avoided under any circumstances. For this reason, follow these instructions:

• Use insulated tools and gloves.

• Do not put any tools or metal parts on the battery module or high-voltage control box.

• When operating the battery, be sure to remove watches, rings, and other metal objects.

• Do not install or operate this system in explosive or high-humidity areas.

• When working on the energy storage system, first turn off the charging controller, then the battery, and ensure that they are not turned on again.

ImProper use of the battery energy storage system can lead to death. The use of the battery energy storage system beyond its intended use is not allowed, because it may cause great danger. **ImProper** handling of the battery energy storage system can cause life-threatening risks, serious injury or even death.

Warning! ImProper use can cause damage to the battery cell.

- Do not expose the battery module to rain or soak it in liquid.
- Do not expose the battery module to a corrosive environment (such as ammonia and salt).
- The battery energy storage system shall be debugged no later than six months after delivery.

SOLARONE.RO® SISTEME FOTOVOLTAICE

3. Transport to the end customers

3.1 Provisions on Shipping of Battery Modules

It is necessary to comply with the relevant regulations and Provisions on roads for shipping lithium-ion Products in the corresponding countries.

It is Prohibited to smoke in the vehicle during transportation or in the vicinity during loading and unloading.

The dangerous goods transport vehicles shall meet relevant regulations concerning road transportation and shall be equipped with two tested CO2 fire extinguishers.

It is forbidden for the freight forwarder to open the outer package of the battery module. Use only apProved lifting equipment to move the battery cabinet system. Use only the hanging lug on the top of the battery cabinet as the connection point. When lifting, the angle of the sling must be at least 60°.

ImProper vehicle transportation can cause injury. ImProper transportation or imProper transportation locks may cause the load to slip or overturn, resulting in injury. The cabinet shall be placed vertically to prevent it from sliding in the vehicle, and a fixing belt shall be used.

A tilting of the battery rack may cause injury. The maximum weight of a single battery rack of BOS-G Pro can reach 622 kg. When tilted, they may overturn, causing injury and damage. Ensure that the battery cabinet is on a stable surface and that it does not tilt due to load or force.

The battery energy storage system can be damaged, if not Properly transported. The battery module can only be transported vertically. Note that these parts may be top-heavy. Failure to follow this instruction may result in damage to the part.

During transportation, the battery storage rack may be damaged when it is installed with the battery module. The battery storage rack is not designed to be transported with the installed battery modules. Always transport the battery module and the battery rack separately. Once the battery module is installed, do not move the battery rack, and do not lift it by a lifting device.

If possible, do not remove the transport packaging before arrival at the installation site. Before removing the transport Protector, check if the transport packaging is damaged, and check the impact indicator on the outer packaging of the battery converter. If the impact indicator is triggered, the possibility of transport damage cannot be ruled out.

ImProper transportation of battery modules may cause injury. The single battery module weighs 46 kg. If it falls or slips, it may cause injury. Only use suitable transport and lifting equipment to ensure safe transport.

Wear safety shoes to avoid the danger of injury. When transporting the battery rack and battery module, their parts may be crushed due to their heavy weight. Therefore, all persons involved in transportation must wear safety shoes with toe caps. Please observe the safety regulations for transportation at the end customer's site, especially during loading and unloading.

During transportation and installation of unpacked battery storage cabinets, the risk of injury increases, especially on sharp metal panels. Therefore, all personnel involved in transportation and installation must wear Protective gloves.

The maximum weight of a single rack of BOS-G Pro can reach 622kg. We suggest that at least 2-3 people work together to install the battery rack. The lifting device is helpful for heavy parts, and the pulley or cart for light parts. Be careful not to damage the case. The number of battery modules stacked shall not be more than 8.

Check whether the delivery is complete.

3.2 Storage Position of the battery packaging module

The battery module can only be transported in an upright position. Please note that the battery rack may be very top-heavy.

SOLARONE.RO®
SISTEME FOTOVOLTAICE

4. Description and installation of BOS-G Pro battery

4.1 Installation Precautions

WARNING! Possible damage to the building due to static overload

1. The total weight of the battery storage system is 883 kg. Ensure that the installation site has sufficient bearing capacity.
2. When selecting the installation site, consider the transportation route and necessary site cleanup.
3. Installation levelness: The allowable deviation is less than 5mm.

4.2 BOS-G Pro Product Description

4.2.1 Product introduction

BOS-G Pro is a high-voltage lithium-ion battery system. It Provides a reliable backup power supply for supermarkets, banks, schools, farms and small factories to smooth the load curve and achieve peak load transfer. It can also imProve the stability of renewable systems and Promote the application of renewable energy.

It is characterized by high integration, good reliability, long service life, wide working temperature range, etc. The battery energy storage system is modular. Each battery module has a capacity of 5.12 kWh. It can support up to 17 battery modules in series. Its total energy can be expanded from 25.6 kWh to 87.04 kWh.

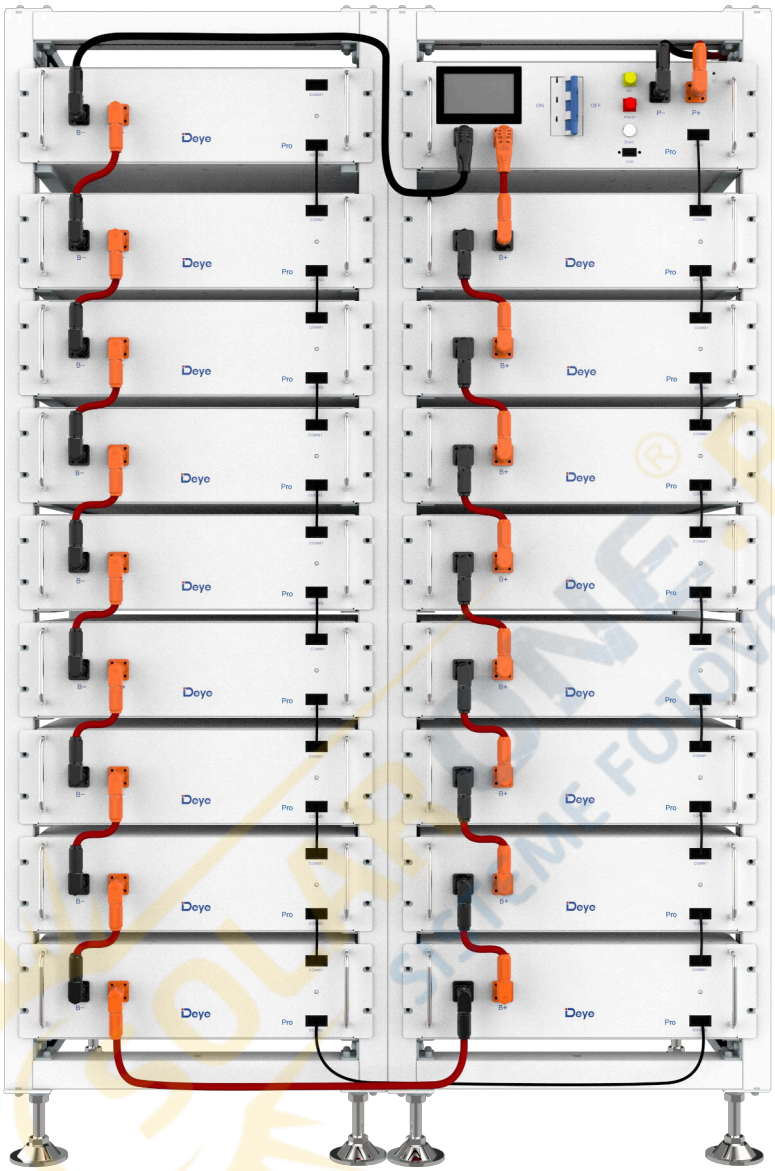
Deye
Pro
B-
B+
P-
P+
ON
OFF

4.2.2 Product selection

We offer our customers three options:
The first option: requires 5 to 8 battery modules can choose a 9-layer Product solution. The Product appearance is shown in the following figure:

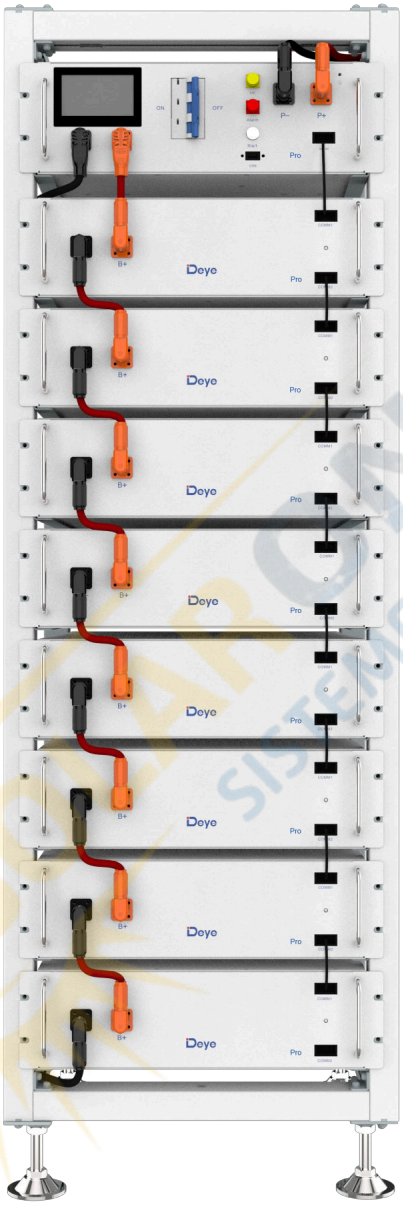

SOLARONE.RO
SISTEME FOTOVOLTAICE

The second option: need 9~12 battery modules can choose 13-layer Product solution. The Product appearance is shown in the following figure:

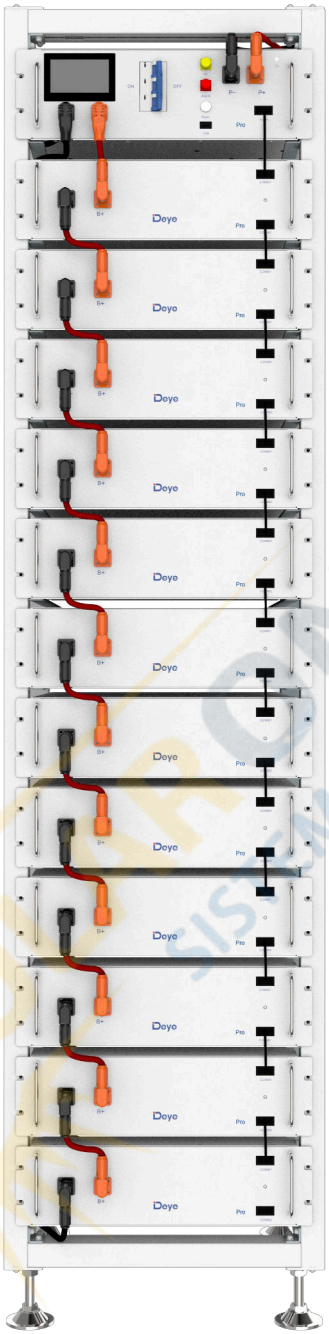

SOLARONE.RO SISTEME FOTOVOLTAICE

The third option: need 13~17 battery modules can choose two 9-layer Product solution. The Product appearance is shown in the following figure:

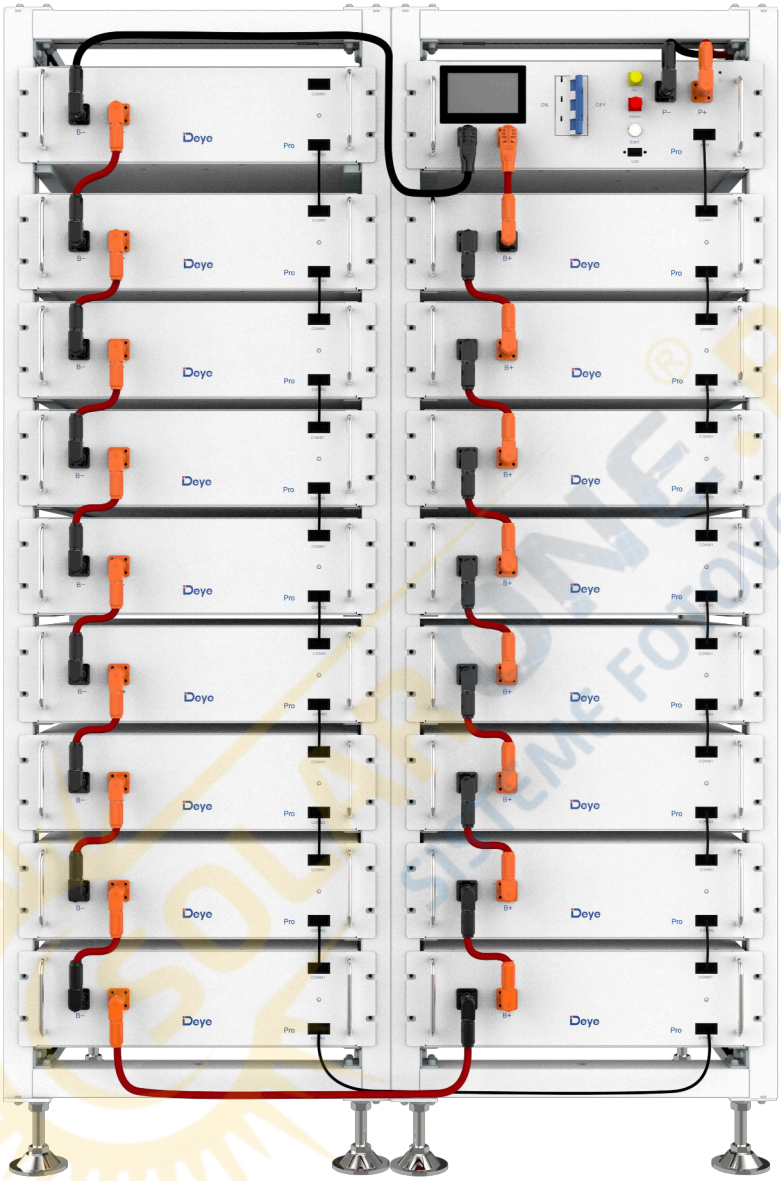

4.3 Technical Data

The energy of the battery system (5~17 battery modules)	5 battery modules	25.6kWh
	6 battery modules	30.72kWh
	7 battery modules	35.84kWh
	8 battery modules	40.96kWh
	9 battery modules	46.08kWh
	10 battery modules	51.2kWh
	11 battery modules	56.32kWh
	12 battery modules	61.44kWh
	13 battery modules	66.56kWh
	14 battery modules	71.68kWh
	15 battery modules	76.8kWh
	16 battery modules	81.92kWh
	17 battery modules	87.04kWh
Charge-discharge rate (Max)	1C	
Battery cell chemistry	$LiFePO_4$	
Maximum charging/discharging current	100A	
Module capacity	100Ah	
Working voltage	8 battery modules	332.8~467.2V
	12 battery modules	499.2~700.8V
	17 battery modules	707.2~992.8V
Working temperature	Charge: 0 ~ 55℃/Discharge:-20 ~ 55℃	
Humidity	5% - 85% (RH)	
The altitude of the installation site	≤ 3000 m	
Dimensions (W x D x H)	9-layer: 530*602*1629mm	
	13-layer: 530*602*2219mm	
	Two 9-layer: 1060*602*1629mm	
Warranty period	10 years	
The total weight (8 battery modules, 1 rack)	428 kg	
The total weight (12 battery modules, 1 rack)	622 kg	
The total weight (17 battery modules, 2 rack)	883 kg	
Weight of each battery module/9 battery rack /13 battery rack	46 kg | 41 kg| 51 kg	
Case Protection grade	IP20	
Certification	UN38.3/CE/CE-EMC/ IEC62040/CEC/VDE/CEI	

4.4 Preparation

4.4.1 Tools required

TOOL	USE
L-shaped hexagonal wrench	• Fixed beam with left and right welding frame • Fixed beam with diagonal support
10mm hexagon socket	• Fix the expansion screw
24mm wrench	• Adjust the height of the base and tighten the nut.

4.4.2 Auxiliary Tools and Materials Required

AID/MATERIAL Auxiliary tools/materials	USE
Fastening materials (M6*20 screws, M6*100 expansion screws, M6 nuts)	1. Assemble the battery racks and fix them on the wall or connect the two racks. 2. Assemble the battery modules and high-voltage control boxes, and fix them to the racks.

SOLARONE.RO® SISTEME FOTOVOLTAICE

4.5 Description of Rack

4.5.1 3U-HRack Parts description

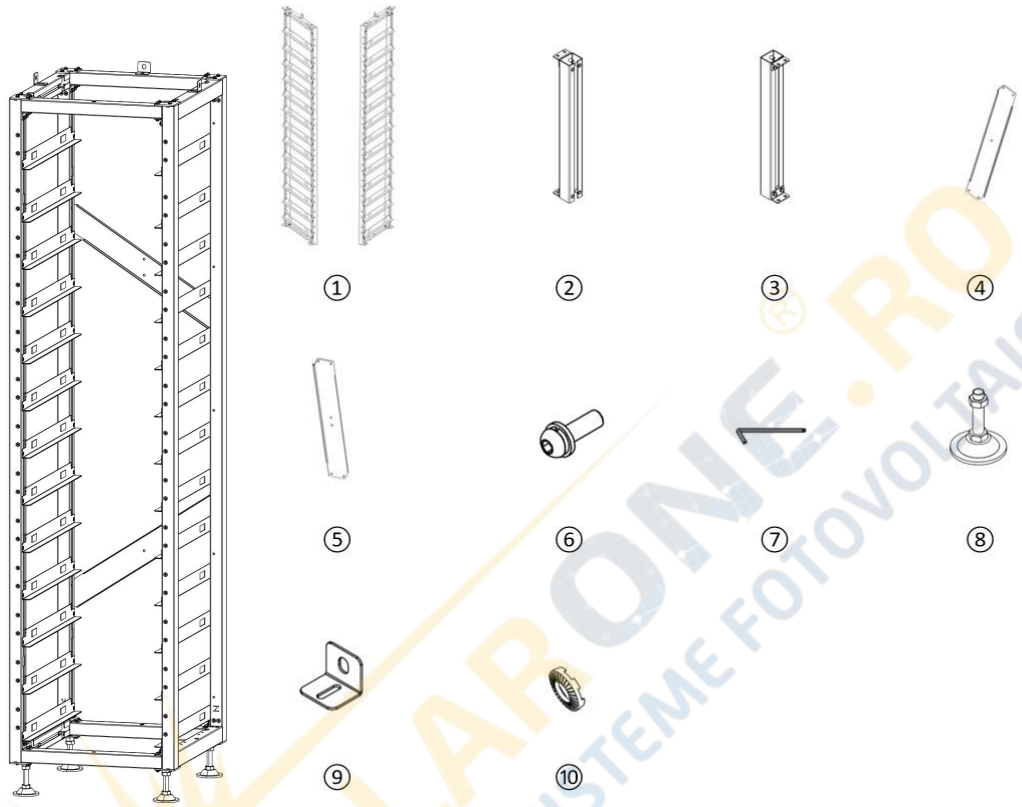

No.	Description
①	Side beam
②	Top beam
③	Bottom beam
④	Left diagonal brace
⑤	Right diagonal brace
⑥	Round head hexagon socket combination screws
⑦	Allen wrench
⑧	Base
⑨	Rack fastener
⑩	Broken lacquer flakes

SOLARONE.RO SISTEME FOTOVOLTAICE

According to customer needs, if the customer needs less than 8 battery packs (1~7 battery packs +1 high voltage box), then the customer can choose a simple rack.
Note: Simple bracket is optional.
The installation Procedure of the simple mounting rack is shown in the figure.

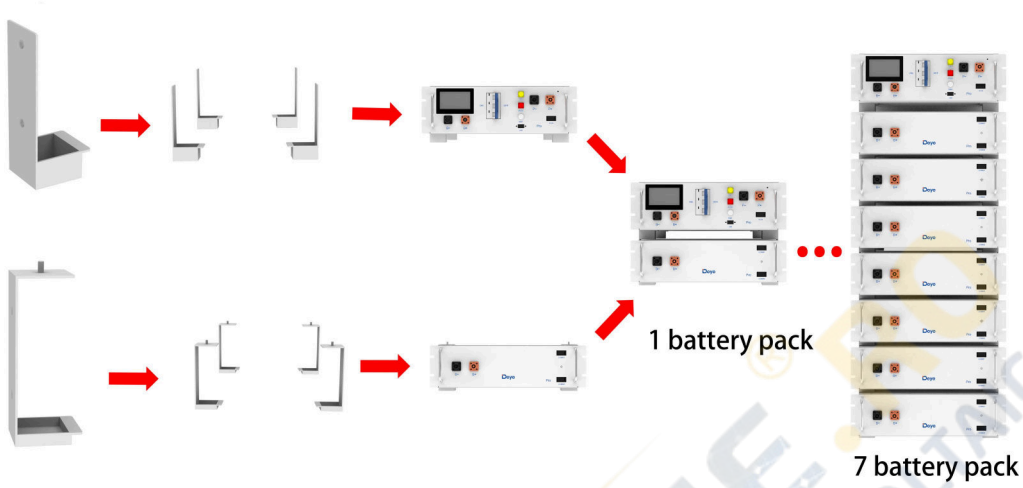

4.5.2 Installation of Rack

1. Take out the two left and right welding frames, and fix the four beams on the upper and lower sides of the beams with hex combination screws(Broken lacquer flakes and Round head hexagon socket combination·screws' combination way is in the following figure) and hex wrenches, respectively, to form a rectangular frame.
2. Fix the upper and lower diagonal supports to the left and right welding frames using round head hex combination screws and hex wrenches.
3. Screw the base into the bottom plate and secure it with hexagonal wrench or by hand.
4. When installation is complete, stand the rack up.
5. To fix the rack on the wall, use a hexagonal wrench to install the rack fastener on the socket combination screw hole above the rack and fix it with the socket combination screw. Fix the other side of the rack with the wall using round head hexagon combination screws. To fix two racks together, install the rack fasteners on the hexagon socket combination screw holes above the frame, and fix them together with hexagon socket combination screws and nuts.

Please refer to installation guide for details.

4.6 Description of Battery Module

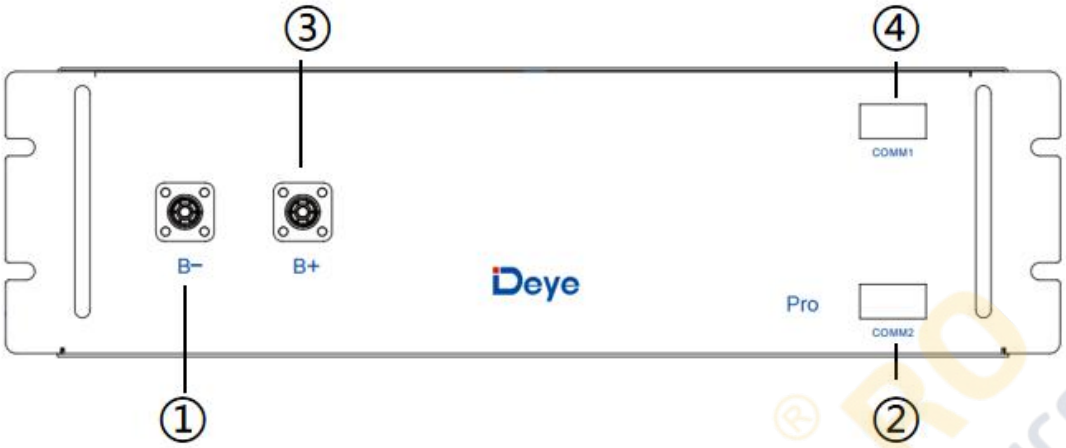

No.	Name	Description
①	B-	Battery module negative pole (black)
②	COMM2	Connection position of battery module communication and power supply output
③	B+	Battery module positive pole (orange)
④	COMM1	Connection position of battery module communication and power supply input

4.7 Description of High-Voltage Control Box

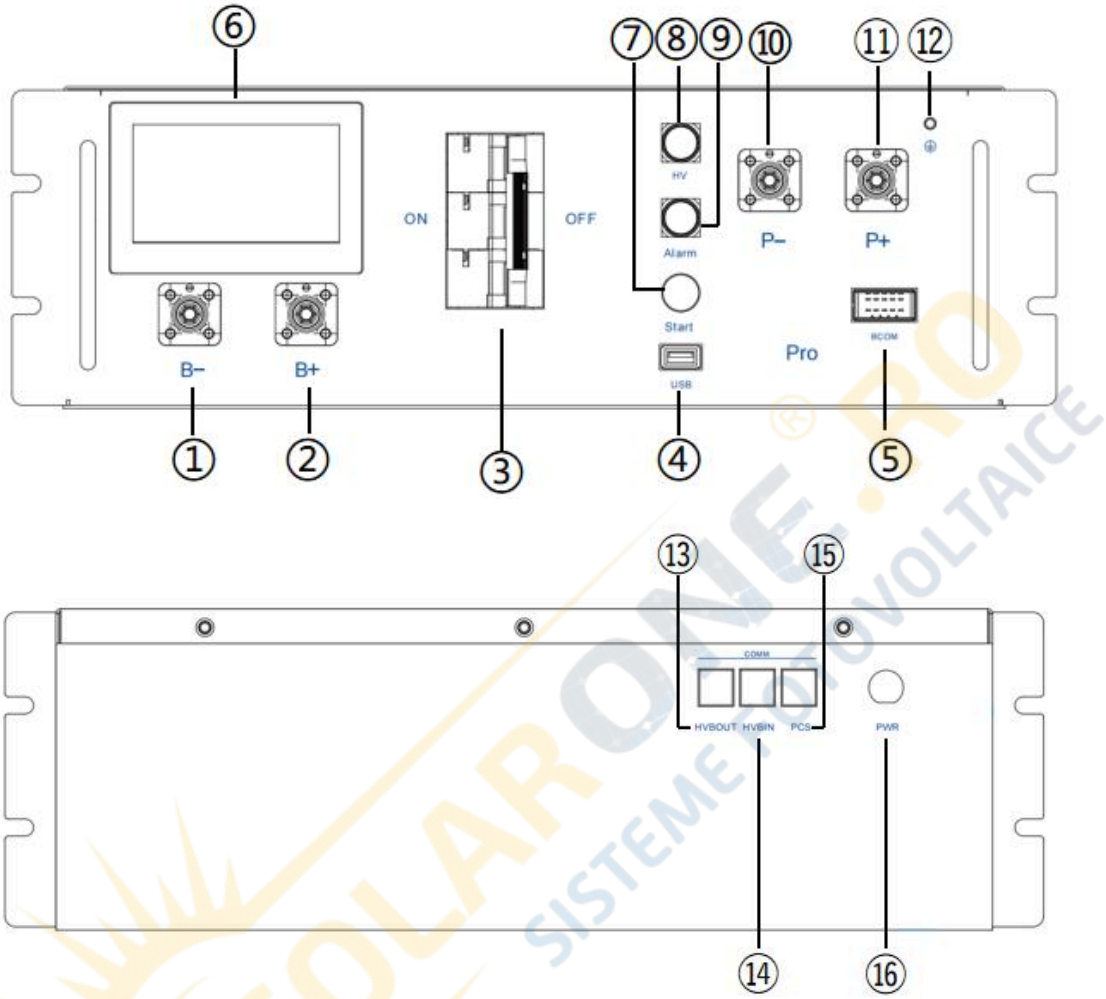

No.	Name	Description	Position
①	B-	Connection position of the common negative pole of the battery (black)	Front
②	B+	Connection position of the common positive pole of the battery (orange)	Front
③	Air switch	Used to manually control the connection between the battery rack and external devices.	Front
④	USB	BMS upgrade interface and storage expansion interface	Front
⑤	BCOM	Communicative connection with the first battery module; and Providing 12VDC power for the first battery module.	Front
⑥	Human-machine interface (HMI)	Display some important battery information.	Front
⑦	START	A start switch of 12VDC power inside the high-	Front

		voltage control box	
⑧	HV light indicator	High-voltage hazard indicator (yellow)	Front
⑨	ALRM light indicator	Battery system fault alarm indicator (red)	Front
⑩	PCS-	Connection position of PCS negative pole (black)	Front
⑪	PCS+	Connection position of PCS positive pole (orange)	Front
⑫	Grounding wire identification	Connection to the battery rack and the ground point	Front
⑬	OUT COM	Connection position with next BOS-G-PDU-2 communication output	Rear
⑭	IN COM	Connection position with previous BOS-G-PDU-2 communication input	Rear
⑮	PCS COM	PCS COM battery communication terminal: (RJ45 port) follow the CAN Protocol (default baud rate: 500bps) and RS485 Protocol (default baud rate:9.6bps), used to output battery information to the inverter.	Rear
⑯	POWER	Connection position of external 12VDC power supply	Rear

SOLARONE.RO SISTEME FOTOVOLTAICE

4.8 Description of Battery Module in Rack

No.	Description		quantity
①	High-voltage control box 1000V/100A		1
②	5.12kWh battery module (general)		17
③	120ohm terminal resistor		1
④	Communication cable (160 mm for battery module, 250 mm for high-voltage control box) CAT5E FTP 26AWG black	Standard	16

⑤	140 mm positive power cord of high-voltage control box UL 10269 4AWG red	Standard	1
⑥	200 mm power cord of battery module UL 10269 4AWG red	Standard	15
⑦	The negative power cord of the high-voltage control box 2150mm UL 10269 4AWG black	Standard	1
⑧	140 mm ground wire A (ground wire B for external connection of battery rack is not Provided) UL 1015 10AWG yellow green	Standard connecting cable A (connecting the high-voltage control box)	1
⑨	Connected to external PCS positive power cord (EPCable2.0) UL 10269 4AWG red	Standard	1
⑩	Connected to external PCS negative power cord (ENCable2.0) UL 10269 4AWG black	Standard	1
⑪	1000mm power cable between the two battery racks	Standard	1
⑫	1000mm communication cable between the two battery racks	Standard	1
⑬	2000mm network cable	Standard	1
⑭	Heat insulation foam	Standard	2
⑮	Rubber pad	Standard	2

SOLARONE.RO SISTEME FOTOVOLTAICE

Definition of PCS communication interface		Racks in parallel IN		Racks in parallel OUT		Definition of power		
1	485B-	1	BMS_CANL	1	BMS_CANL	1	12V	
2	485A+	2	BMS_CANH	2	BMS_CANH	2	GND	
3		3	DI+	3	DO2+			
4	PCANH	4	DI-	4	DO-			
5	PCANL	5		5				
6		6		6				
7	485A+	7		7				
8	485B-	8		8				

Definition of the high-voltage control box interface		Definition of the battery module interface				
Definition of BMS-BMU communication interface		Definition of the upper BMU interface		Definition of the lower BMU interface		
1	BMU_CANL	1	BMU_CANL	1	BMU_CANL	
2	BMU_CANH	2	BMU_CANH	2	BMU_CANH	
3	DO+	3	DI+	3	DO+	
4	DO-	4	DI-	4	DO-	
5	GND	5	GND	5	GND	
6	GND	6	GND	6	GND	
7	12V	7	12V	7	12V	
8	12V	8	12V	8	12V	

SOLARONE.RO SISTEME FOTOVOLTAICE

4.9 Wrong wiring method

The first incorrect wiring method

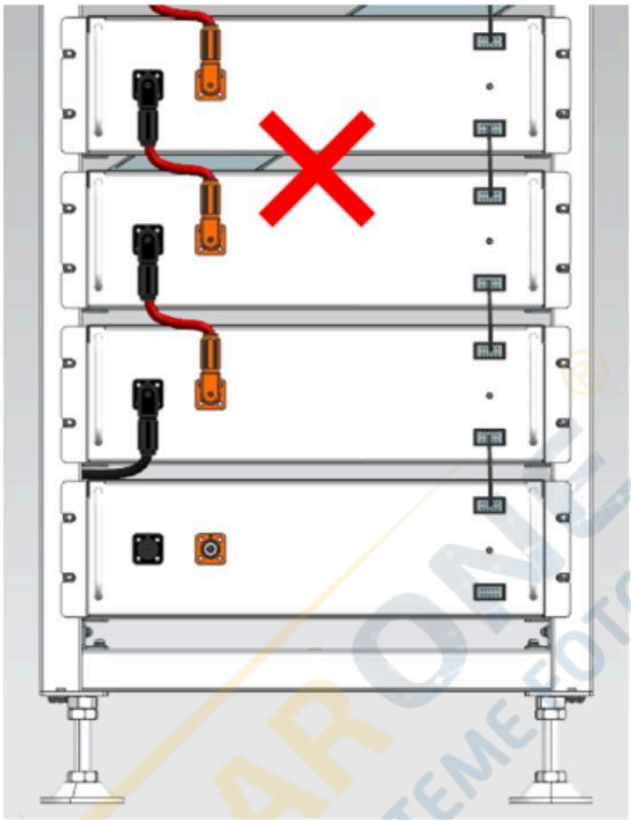

The second incorrect wiring method

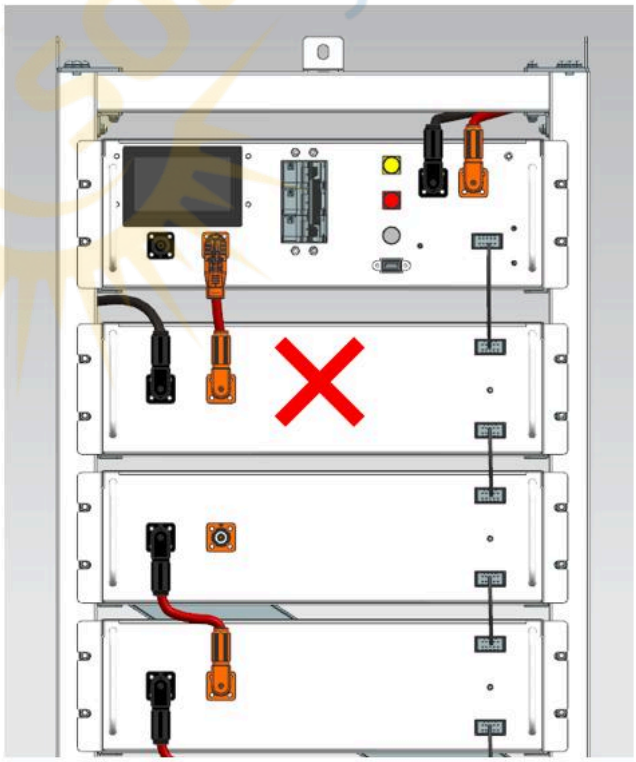

4.10 Installation of the Battery Module to the Rack

Insufficient or no grounding may cause an electric shock. Device malfunctions, and insufficient or no grounding may cause device damage and life-threatening electric shocks.

Note: Before installing the battery, please turn the manual switch of the high-voltage control box to the off position.

Note: Before installing the battery, the minimum distance to the surrounding buildings or other objects is 5mm.

CAUTION

Remember that this battery is heavy! Please be careful when lilting out from the package.

CAUTION

Note the allowable installation modes：

SOLARONE.RO SISTEME FOTOVOLTAICE

1. Insert the first battery module into the battery module rack at the bottom cluster rack; then in the order from bottom to the top, continue the installment in the same way till it reaches the twelfth floor. On the thirteenth floor, insert the slide of the cabinet at the top of the rack into the high-voltage control box.
2. After the battery module and control box is inserted into the rack, use M6*20 hex socket combination screws to fix all the lugs of the battery module and control box on the side beam in turn.
3. Note: During the installation of the cluster stand, the thermal insulation cotton is installed at the bottom of the cluster stand, as shown in the figure:

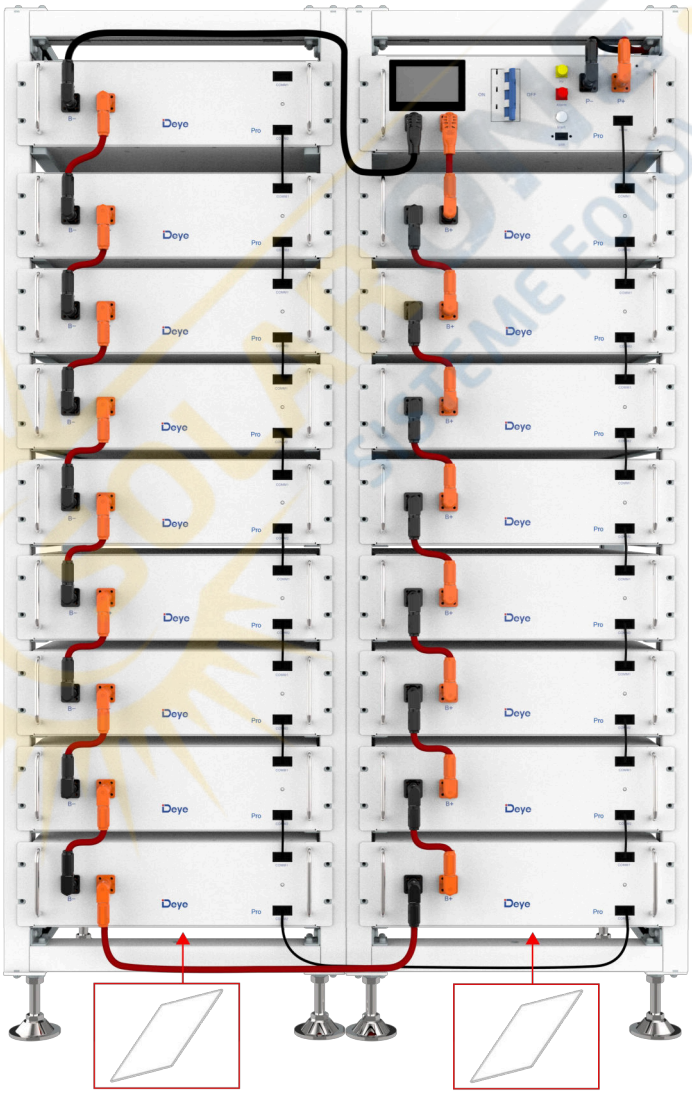

4.10.1 Cable connection

1. Grounding description

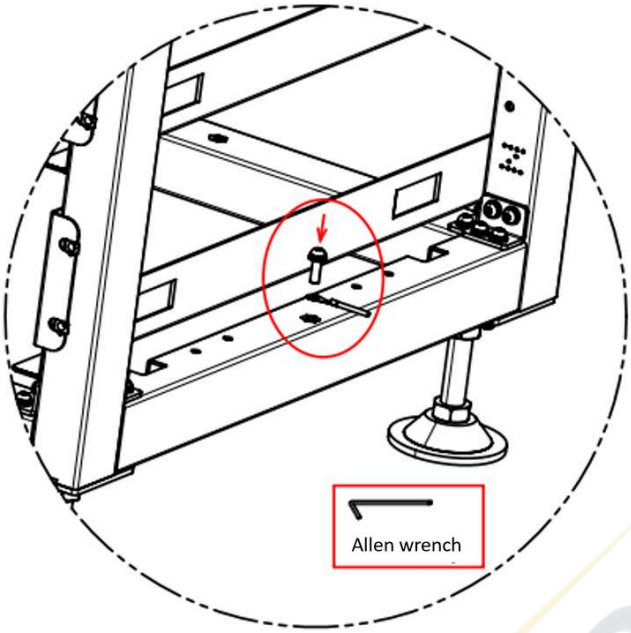

Twist one end of the cable harness ⑧ in 4.8 to the wiring position shown in the figure, and twist the other end to the ground copper bar of the PDC using an Allen wrench.

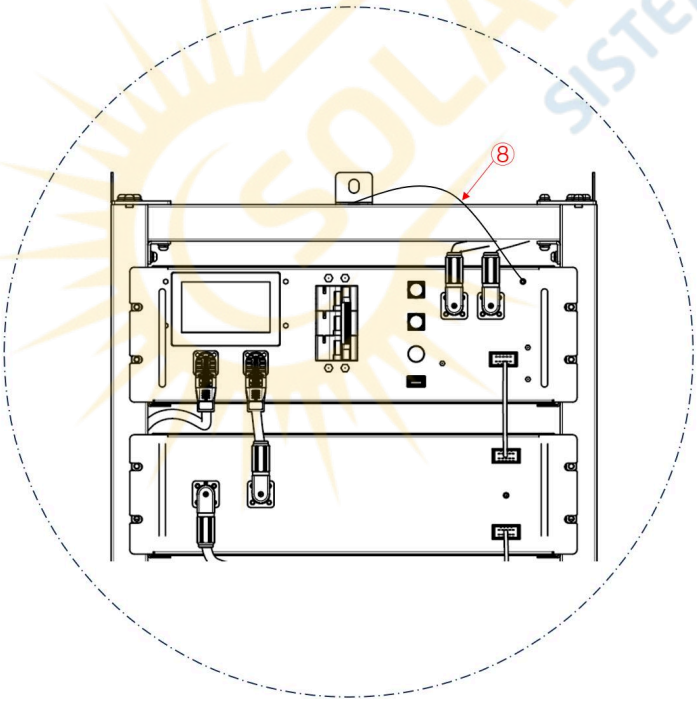

For details, see Section 4.8 Cables ⑧

Connect one end of the ⑧ cable to the Power Distribution Cabinet ground hole using an M4 screw and the other end to the cluster holder hole using an M6 screw.

Take out the ground wire A and connect one end of it to the M4 rivet nut of the high-voltage control box panel, and the other end to any M6 screw hole of the cross beam above the rack. Take out the ground wire B (user need to prepare in advance) and connect one end of it to any M6 screw hole of the cross beam under the rack, and the other end to the customer's grounding point. (The length of the ground wire B is determined based on the customer's condition.)

SOLARONE.RO® SISTEME FOTOVOLTAICE

4.10.2 Battery installation cable Description

For details on how to connect all cables, see Section 4.8.

B+ and B- are connected between battery packs using cable No.⑥.
control box Connect B+ to battery pack B+ using cable ⑤.
control box P+ Use ⑨connector P- Use ⑩ connector.

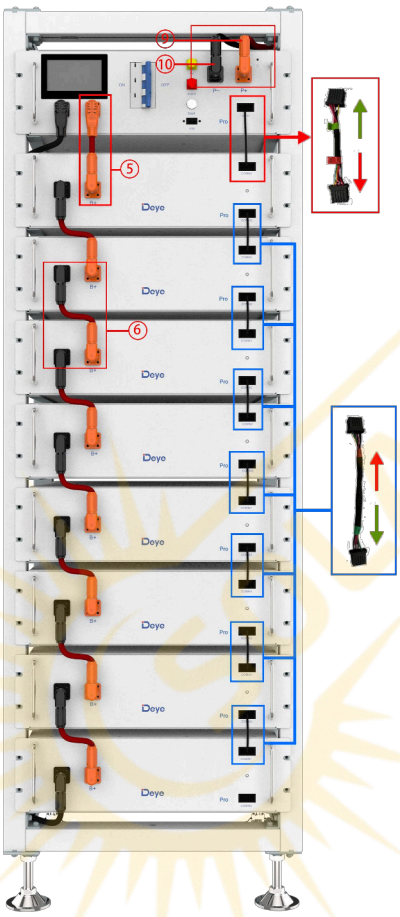

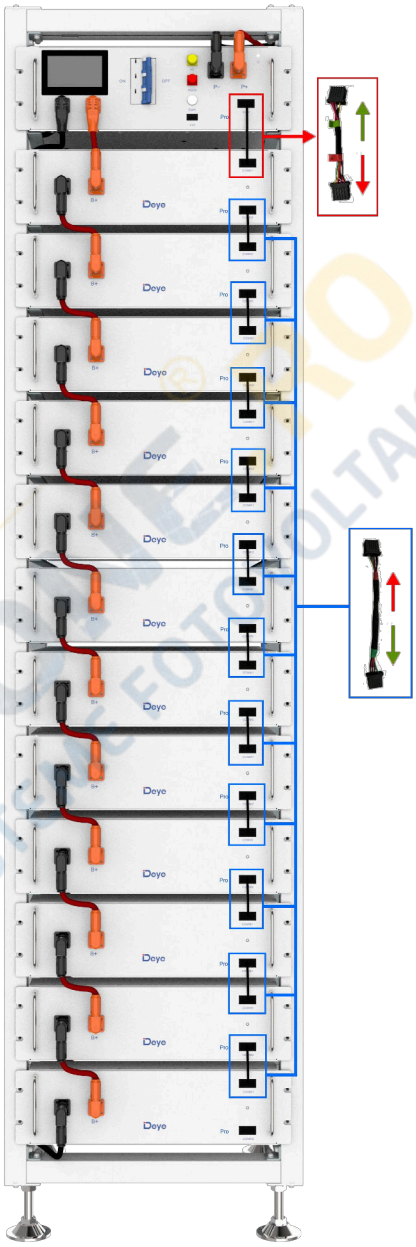

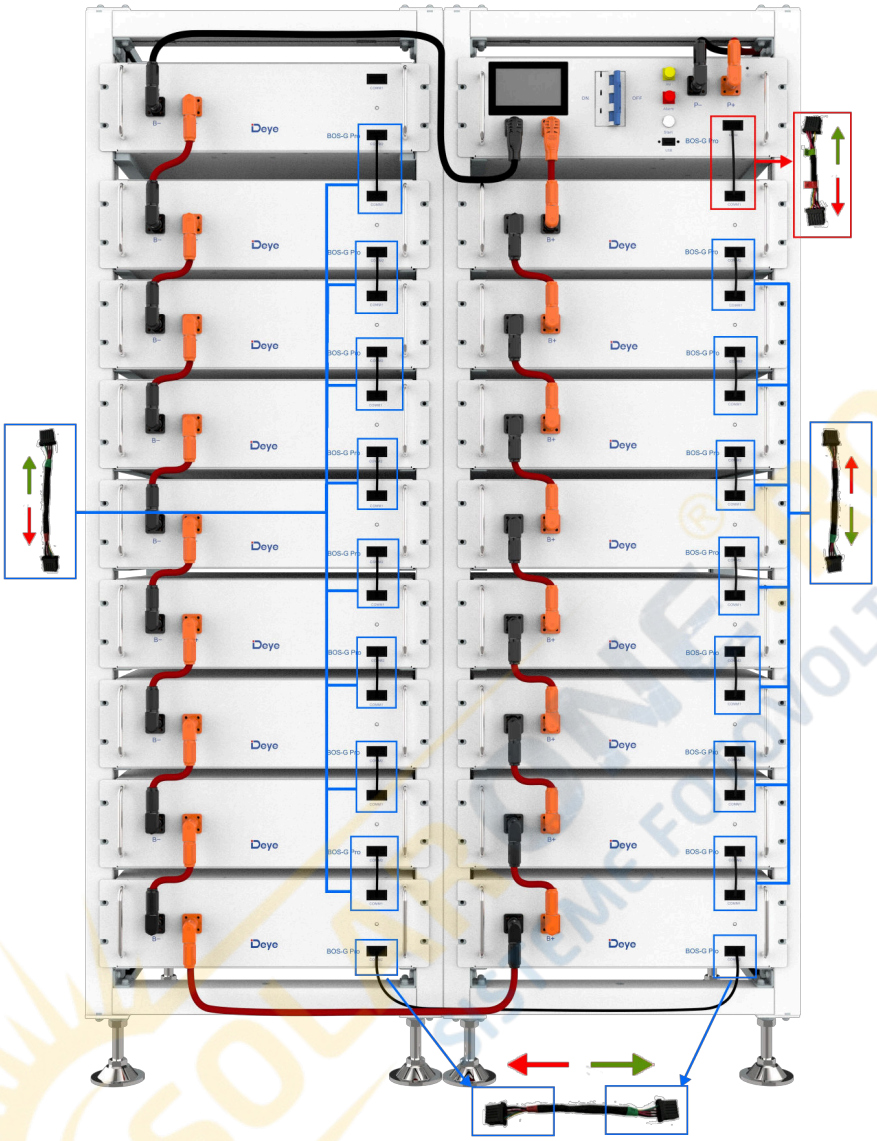

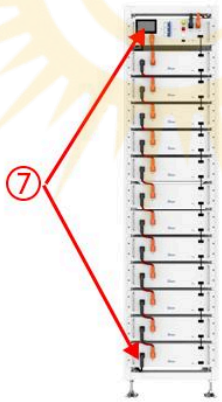

control box B- and bottom battery pack B- are connected using cable number ⑦.

4. After the battery module is placed in the control box, take out a 250 mm communication cable to connect the communication port of the battery module and the high-voltage control box, and 11x160mm communication cables to connect the battery module communication port (IN-OUT) from top to bottom.

✧ The OUT communication port of the last battery module does not need to be connected to communication cable. Instead, this port is sealed with a 120ohm terminal resistor.

5. Take out a 140 mm positive power cord and connect the positive pole of the battery module at the top to the positive pole of the high-voltage control box. Take out 11x200mm battery module power cords and connect the power ports (B- to B+) in a top to bottom order to form a series circuit. For aesthetics, connect the negative power pole of the first battery module to the negative power pole of the high-voltage control box from the bottom of the battery module to the back of the rack. On the back of the rack, a plane-head-shaped tie is used to secure the cable harness.
6. Take out the external positive power cord EPCable2.0 and external negative power cord ENCable2.0, and plug them into PCS interfaces, respectively.
7. Take out the ground wire A and connect one end of it to the M4 rivet nut of the high-voltage control box panel, and the other end to any M6 screw hole of the cross beam above the rack. Take out the ground wire B (user need to prepare in advance) and connect one end of it to any M6 screw hole of the cross beam under the rack, and the other end to the customer's grounding point. (The length of the ground wire B is determined based on the customer's condition.)

4.11 Battery cluster connected to inverter

For the Australian Market, an over-current Protection and isolation device that isolates both positive and negative conductors simultaneously is required between the battery system and inverter

Battery cluster connected to inverter

Notice: The length of the communication line between the inverter and the battery should not exceed 30m.

Single battery cluster connected to inverter

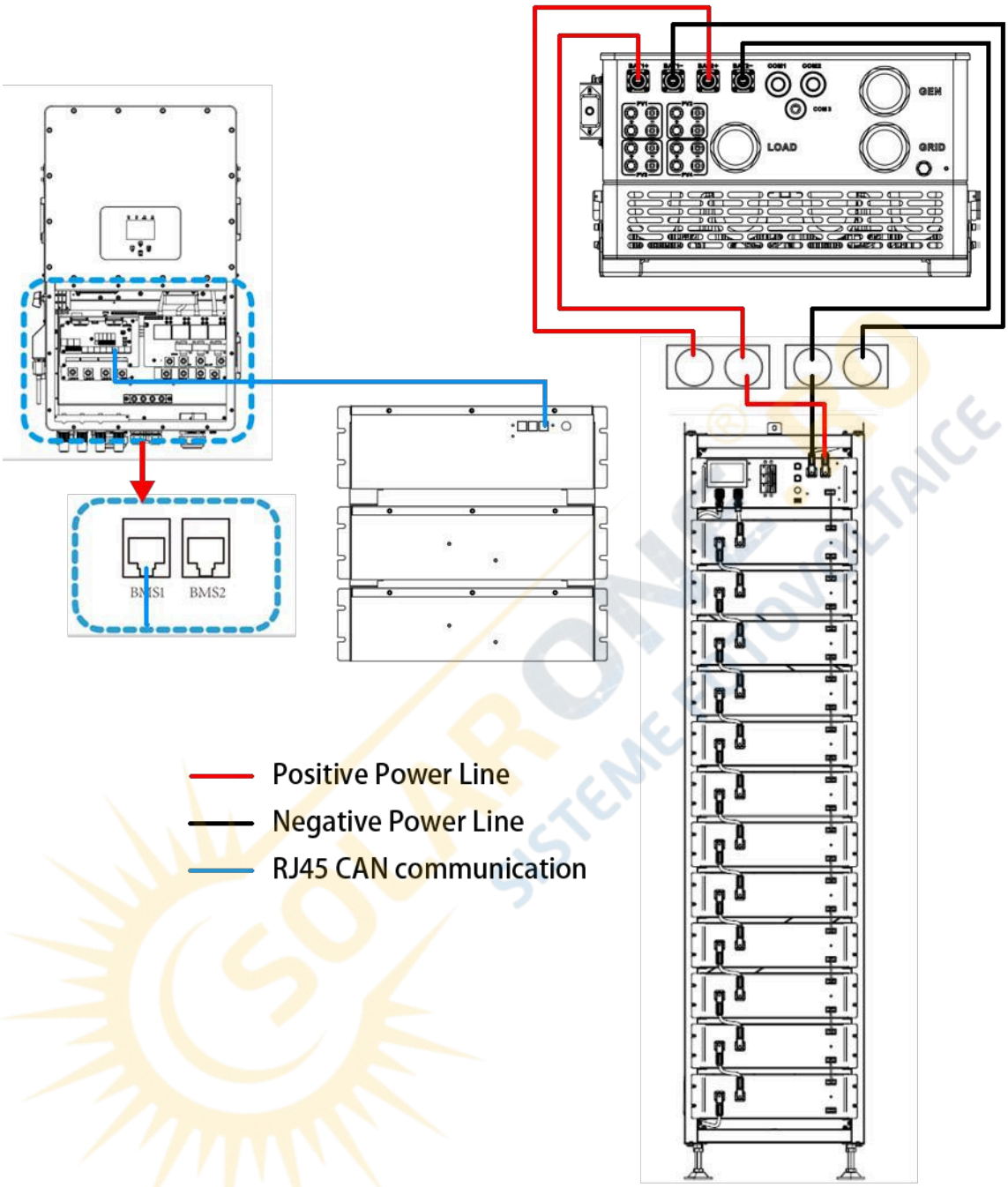

Two battery clusters connected to the inverter

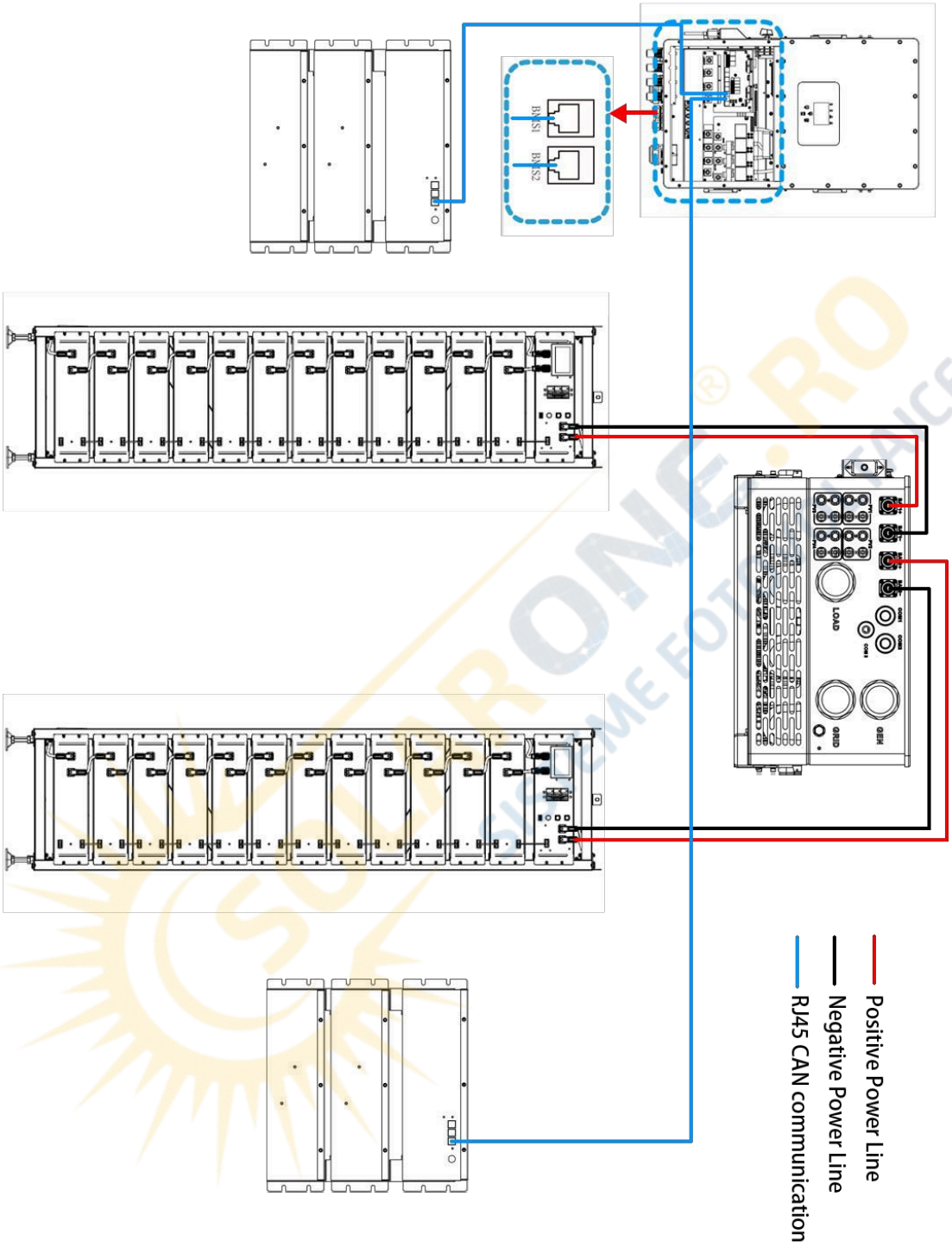

Three battery clusters connected to the inverter

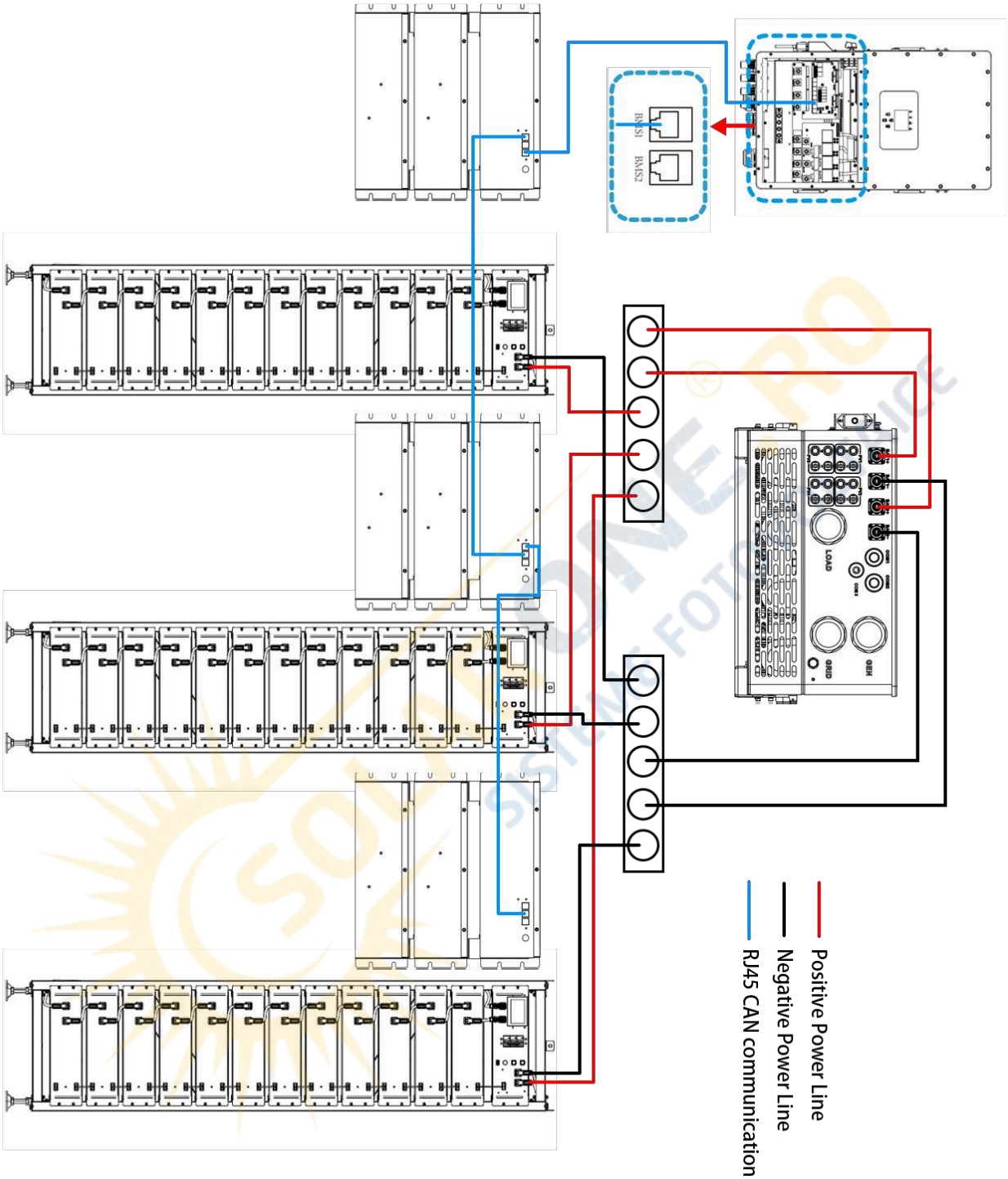

Multiple battery packs are connected to the inverter

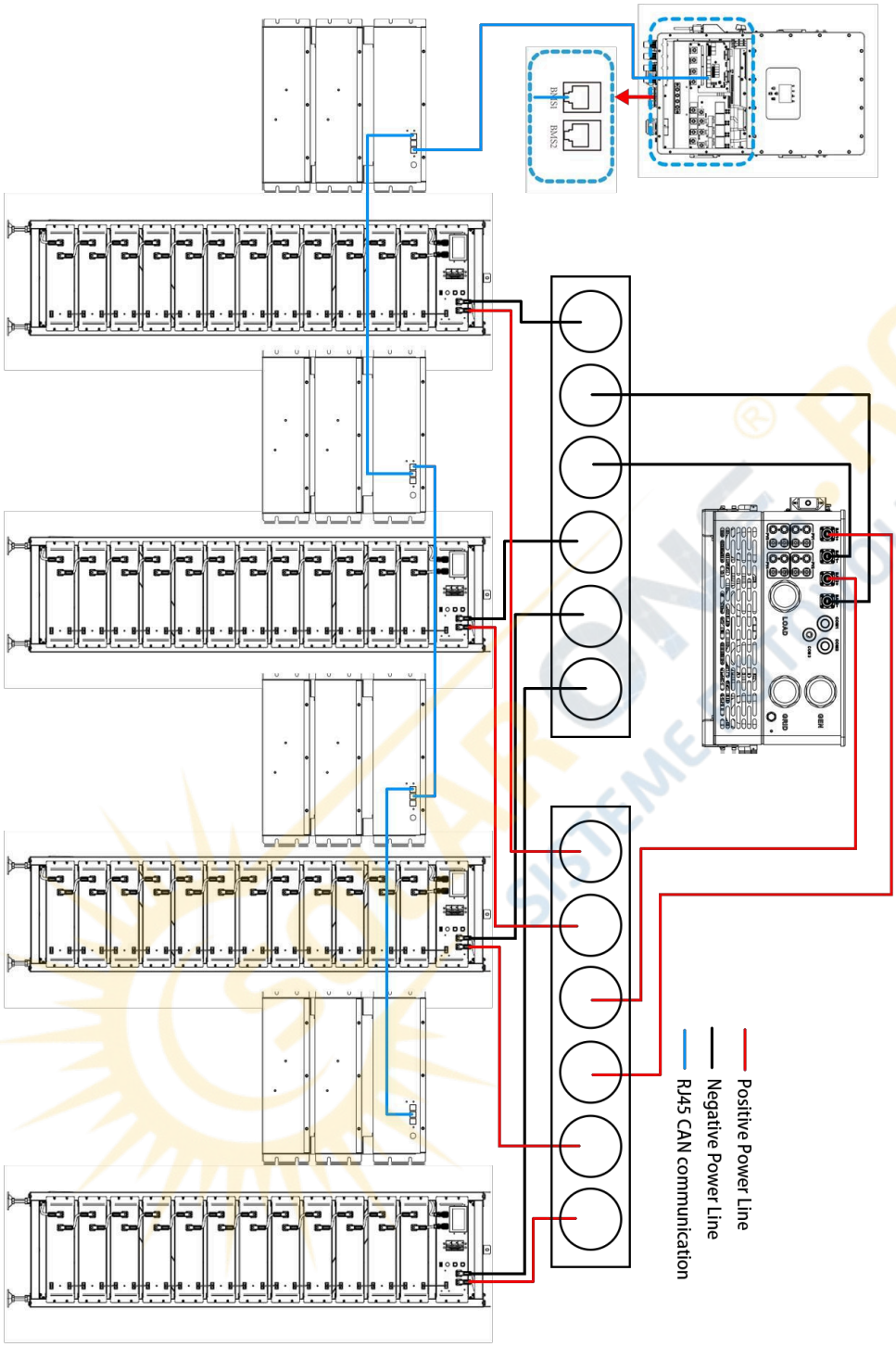

The number of battery packs in each cluster must be the same in each group, and the number of battery packs in group A and Group B can be different.

4.12 System startup and shutdown

Startup Procedure

1) After connecting the battery cables, press the air switch button on the high-voltage control box to turn OFF to ON.
2) Press the start button and wait for the screen to light up.
3) Complete boot

Shutdown Procedure

1) Press the start button again and wait for the screen to go off.
2) Press the air switch button ON the high pressure control box and set the "ON" to the "OFF" position.
3) Complete shutdown

Description of external circuit breakers between inverter and battery system

Turn on the circuit breaker and then start the battery pack.

Turn off the circuit breaker after the battery pack is closed.

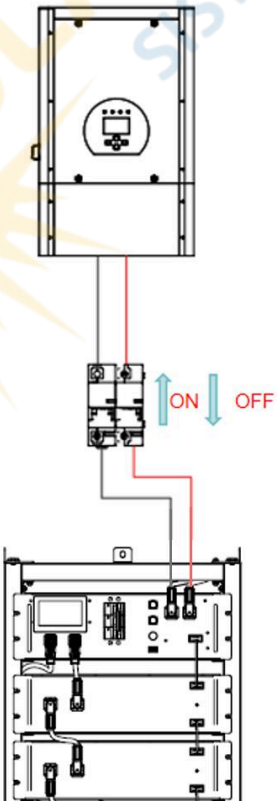

4.13 Procedure for configuring battery packs

Steps:

1. After connecting the battery cables, press the air swim key to enter the main interface of system maintenance. The operation shall be performed by a Professional. Tch button on the high-voltage control box to turn OFF to ON.

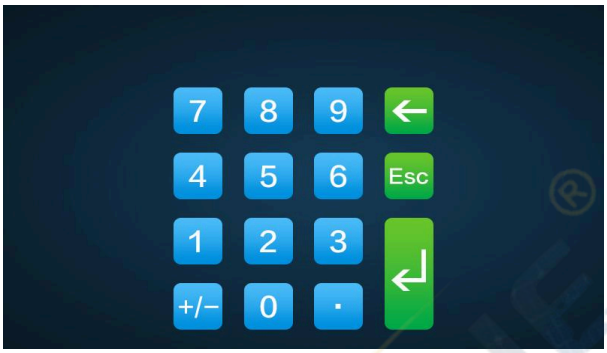

2. Press the start button and wait for the screen to light up.

3. Click the icon on screen to enter the maintenance system password confirmation interface.

4. Enter the password 123 and press the Confir
5. Click “BMU Number” in the lower left corner, enter the number of packs in system and click “OK” to finish configuring the number of packs.

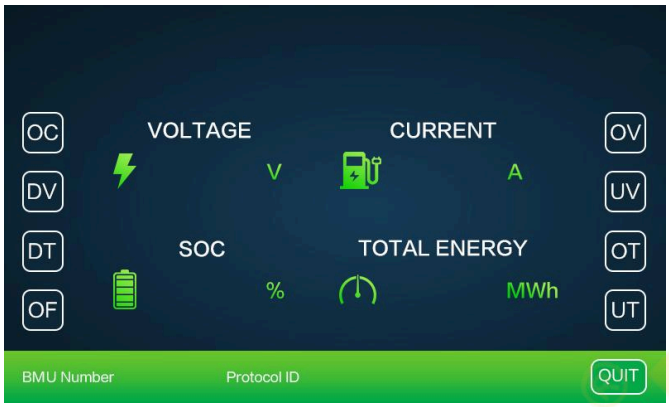

6. After the setting is successful, you need to restart. Click the Start button to restart, wait for about 8 seconds until the yellow HV light indicator comes on.

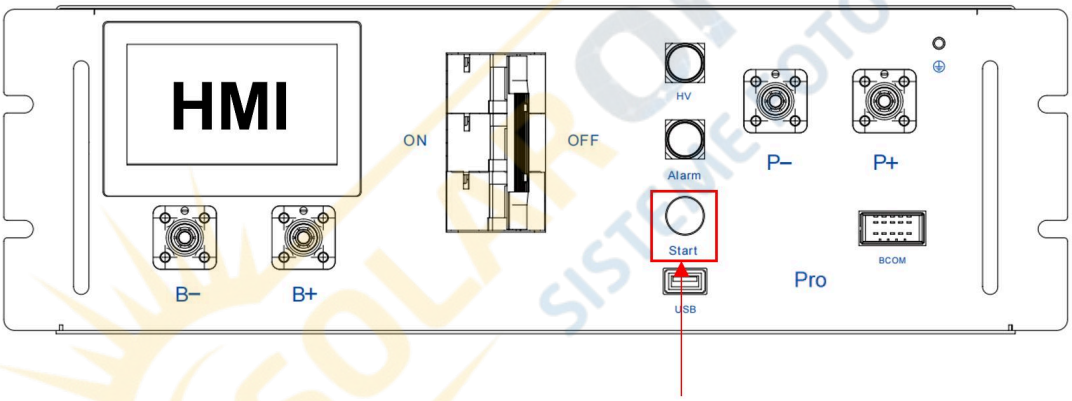

4.14 External 12V Power Supply of High-Voltage Control Box

To operate the high-voltage control box with an external 12V power supply, please contact our service personnel. Hotline: +86 0574 8612 0560, Email: service-ess@deye.com.cn .

In the factory configuration, the high-voltage control box is supplied with working voltage from an internal power supply unit. If your plan requires an external 12V power supply, an adaptive version and a high-voltage control box can be Provided as requested. Please contact our after-sales service personnel for details.

5. BOS-G Pro User Interface

5.1. Main Interface

The default interface will appear after powering on. If the screen is not touched for more than 13 minutes, it will darken and the default interface replaces the other interface. Click this screen to enter the user interface.

5.2 Description of User Interface

SOLARONLINE.RO SISTEME FOTOVOLTAICE

(1) Basic Parameters

System maintenance icon	Click this icon to enter the system maintenance interface.
Voltage	Total battery voltage
Current	Battery current, the positive value representing discharge, the negative value representing charge
SOC	Battery remaining energy
Total energy	Accumulated discharging energy

(2) Fault Indication:

When the corresponding fault type occurs, the red background indicator on the screen will light up.

OV	Overvoltage
UV	Undervoltage
OT	Overtemperature
ISO	Insulation failure, there is a risk of current leakage
OC	Charging overcurrent
OF	Other faults

5.3 Fault viewing interface

Power switch: Once the device is Properly installed and the cables are Properly connected, first set the circuit breaker to the ON position, and then press the Start button to turn on the device.

Click the icon on screen to enter the maintenance system password confirmation interface.

Enter the password 123 and press the Confirm key.

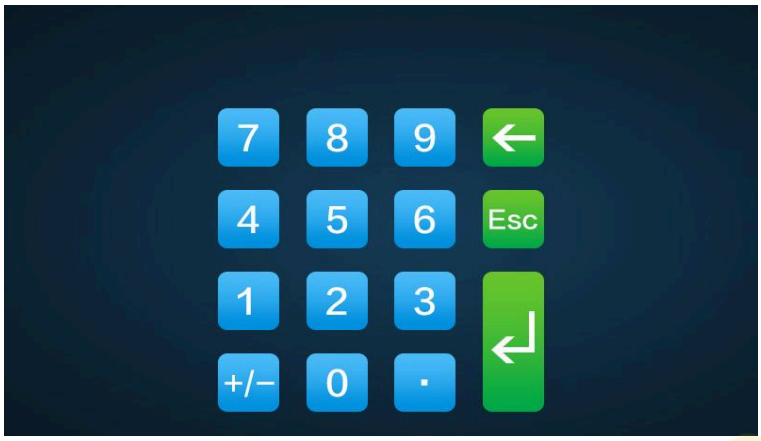

The enter main interface of system. The operation shall be performed by a Professional.

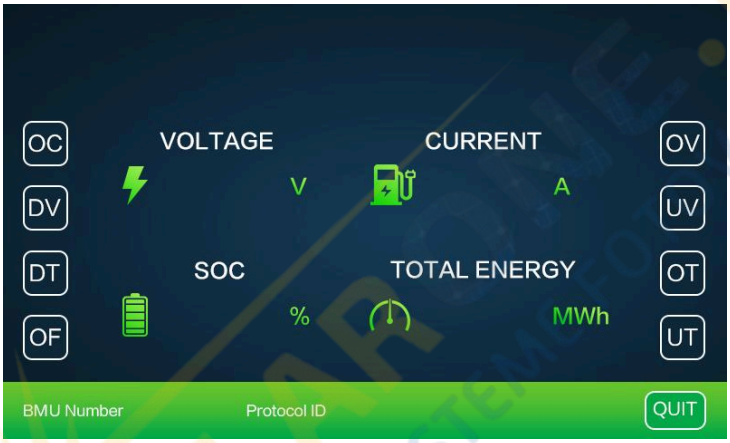

Fault warning

OV turns red: expression overvoltage, click OV to view the detail fault.

UV turns red: expression undervoltage, click UV to view the detail fault.

OT turns red: expression overtemperature, click OT to view the detail fault.

ISO turns red: expression Insulation failure, there is a risk of current leakage, click ISO to view the detail fault.

OC turns red: expression charging overcurrent, click OC to view the detail fault.

OF turns red: expression other faults, click OF to view the detail fault.

5.4 Maintenance Interface

For safety, please unplug the power cord of the positive and negative interfaces before maintenance.

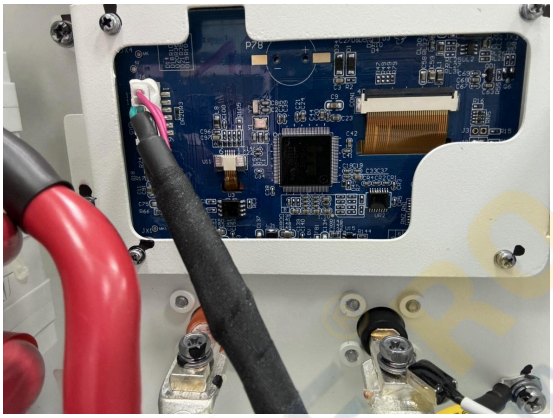

Note: When inserting the SD card, unplug the battery power cord and manually turn the air switch to the off position.

SOLARONPRO SISTEME FOTOVOLTAICE

6. BOS-G Pro fault description

Different types of faults are below:

	Fault types	Trigger conditions
System faults	Charge over-current alarm	Exceeding the parameter set value and set time (More than 105A, 2s; more than 125A, 5s; more than 140A, 2s; lower than 5℃, set value*0.5)
	Charge over-current Protection	
	Discharge over-current alarm	
	Discharge over-current Protection	
	Charge overtemperature alarm	Exceeding the parameter set value and set time (>45℃, 2s)
	Charge overtemperature Protection	Exceeding the parameter set value and set time (>50℃, 2s)
	Discharge overtemperature alarm	Exceeding the parameter set value and set time (>50℃, 2s)
	Discharge overtemperature Protection	Exceeding the parameter set value and set time (>55℃, 2s)
	Charge under temperature alarm	Exceeding the parameter set value and set time (<5℃, 2s)
	Charge under temperature Protection	Exceeding the parameter set value and set time (<0℃, 2s)
	Discharge under temperature alarm	Exceeding the parameter set value and set time (<-10℃, 2s)
	Discharge under temperature Protection	Exceeding the parameter set value and set time (<-20 ℃, 2s)
	Excessive differential voltage alarm	Exceeding the parameter set value and set time (>500mv, 2s)
	Excessive differential voltage Protection	Exceeding the parameter set value and set time (>800mv, 2s)
	Excessive differential temperature alarm	Exceeding the parameter set value and set time (>10℃, 2s)
	Excessive differential temperature Protection	Exceeding the parameter set value and set time (>15℃, 2s)
	Cell overvoltage alarm	To maintain consistency, cut off the charging immediately when the full charge calibration rated voltage of 3.6V is reached. When the voltage drops to 3.35V, restart it with the turned-off red light
	Cell overvoltage Protection	
	Cell undervoltage alarm	

	Cell undervoltage Protection	indicator. All Protective red light indicators are always on!
	Pre-charge resistor overtemperature alarm	Exceeding the parameter set value and set time (>55℃, 2s)
	Pre-charge resistor overtemperature Protection	Exceeding the parameter set value and set time (>65℃, 2s)
	Insulation level 1	Exceeding the parameter set value and set time
	Insulation level 2	Exceeding the parameter set value and set time
	Heating film overtemperature alarm	Exceeding the parameter set value and set time (>75℃, 2s)
	Heating film overtemperature Protection	Exceeding the parameter set value and set time (>80℃, 2s)
	BMS connector overtemperature alarm	Exceeding the parameter set value and set time
	BMS connector overtemperature Protection	Exceeding the parameter set value and set time
	BMU connector overtemperature alarm	Exceeding the parameter set value and set time
	BMU connector overtemperature Protection	Exceeding the parameter set value and set time
	Power loop overtemperature alarm	Exceeding the parameter set value and set time
	Power loop overtemperature Protection	Exceeding the parameter set value and set time
	SOC too low	Exceeding the parameter set value and set time
	Total voltage too high alarm	Exceeding the parameter set value and set time
	Total voltage too high Protection	Exceeding the parameter set value and set time
	Total voltage too low alarm	Exceeding the parameter set value and set time
	Total voltage too low Protection	Exceeding the parameter set value and set time
	Discharge relay adhesion	Relay feedback information state adhesion
	Charge relay adhesion	Relay feedback information state adhesion
	Heating relay adhesion	High voltage is detected after disconnecting the heating relay
	Limit Protection	Exceeding the parameter set value and set time

	Abnormal power supply voltage	Exceeding the parameter set value and set time
	Master positive relay adhesion	Relay feedback information state adhesion
	Fuse Blown	No high voltage is detected after the loop relay is closed
	Repeated BMU address fault	BMU with the same number
	INTER-CAN BUS communication failure	Loss of communication between BMS
	PCS-CAN BUS communication failure	The heartbeat message of the inverter is not received for a long time
	RS485 communication failure	Inverter RS485 access is not received for a long time
	Abnormal RS485 communication	C
	External total voltage acquisition fault	/
	Internal total voltage acquisition fault	The difference between the acquired internal total voltage and the accumulated internal total voltage exceeding the set value
	SCHG total voltage acquisition fault	/
	Cell voltage acquisition fault	The cell voltage acquired is 0
	Temperature acquisition failure	The temperature acquired is -40℃
	Current acquisition fault	/
	Current module fault	Abnormal Hall current/reference voltage
	EEProM storage failure	EEProM write failure during self-test
	RTC clock fault	The external RTC failed to enable the charging function
	Pre-charge failure	Pre-charge timeout
	Charging voltage too low	The minimum cell voltage is lower than the set value
	BMU lost	BMU message not received for a long time
	Abnormal number of BMU	The number of BMU addresses is different from the number of set parameters
	The RTC clock and the number of BMUs are abnormal	Battery pack models ZEN and EVE are available in the system

Note: For more information, please contact us. Email: service-ess@deye.com.cn, Service Hotline: +86 0574 8612 0560.

7. Summary of fault types in BOS-G Pro's screen and HVESS-Monitor

Abbreviation	Screen Protection event description	HVESS-Monitor Protection event description	HVESS-Monitor alarm event description
OT	BMS southward connector overtemperature	BMU connector overtemperature Protection	BMU connector overtemperature alarm
	BMS northward connector overtemperature	BMS connector overtemperature Protection	BMS connector overtemperature alarm
	Pre-charge resistor overtemperature level-2 alarm	Pre-charge resistor overtemperature Protection	Pre-charge resistor overtemperature alarm
	Heating film overtemperature level-2 alarm	Heating film overtemperature Protection	Heating film overtemperature alarm
	Charge overtemperature level-2 alarm	Charge overtemperature Protection	Charging overtemperature alarm
	Discharge overtemperature level-2 alarm	Discharge overtemperature Protection	Discharge over temperature alarm
	/	Power loop overtemperature Protection	Power loop overtemperature alarm
UT	Charge under temperature level-2 alarm	Charge under temperature Protection	Charge under temperature alarm
	Discharge under temperature level-2 alarm	Discharge under temperature Protection	Discharge under temperature alarm
OC	Charge overcurrent level-2 alarm	Charge overcurrent Protection	Charge overcurrent alarm
	Discharge overcurrent level-2 alarm	Discharge overcurrent Protection	Discharge overcurrent alarm
DV	Excessive differential voltage level-2 alarm	Excessive differential voltage Protection	Excessive differential voltage alarm
DT	Excessive differential temperature level-2 alarm	Excessive differential temperature Protection	Excessive differential temperature alarm
OV	Total charge voltage too high	Total voltage too high Protection	Total voltage too high alarm
	Cell overvoltage level 2 alarm	Cell overvoltage Protection	Cell overvoltage alarm
UV	Charge voltage too low	Charging voltage too low	/
	Total discharge voltage too low	Total voltage too low Protection	Total voltage too low alarm
	Cell undervoltage level-2 alarm	Cell undervoltage Protection	Cell undervoltage alarm
OF	Abnormal numbers of BMU	Abnormal numbers of BMU	/
	BMU lost	BMU lost	/
	RTC clock fault	RTC clock fault	/
	Current module fault	Current module fault	/
	SCHG total voltage acquisition fault	SCHG total voltage acquisition fault	/

	Abnormal numbers of BMU and RTC clock fault	The battery type does not match	There are two cell classes in the same cluster
	Abnormal RS485 communication	Abnormal RS485 communication	/
	RS485 communication failure	RS485 communication failure	/
	PCS-CAN BUS communication failure	PCS-CAN BUS communication failure	/
	Repeated BMS address fault	Repeated BMS address fault	/
	Repeated BMU address fault	Repeated BMU address fault	/
	Abnormal power supply voltage	Abnormal power supply voltage	/
	Heating relay adhesion	Heating relay adhesion	/
	SOC too low	SOC too low	/
	SOC too high	SOC too high Protection	/
	Fuse Blown	Fuse Blown	/
	Charge relay adhesion	Charge relay adhesion	/
	Discharge relay adhesion	Discharge relay adhesion	/
	Master positive relay adhesion	Master positive relay adhesion	/
	Temperature acquisition failure	Temperature acquisition failure	/
	Cell voltage acquisition fault	Cell voltage acquisition fault	/
	Inter communication failure	INTER-CAN BUS communication failure	/
	Pre-charge failure	Pre-charge failure	/
	Insulation level 2 alarm	Insulation level 2	Insulation level 1
	External total voltage acquisition fault	External total voltage acquisition fault	/
	Internal total voltage acquisition fault	Internal total voltage acquisition fault	/
	Current acquisition fault	Current acquisition fault	/
	Limit Protection	Limit Protection	/
	EEProM failure	EEProM storage failure	/
ISO EEProM failure	Insulation level 2	Insulation level 2	/

8 Maintenance and upgrade

Warning! ImProper decommissioning may cause damage to the equipment and/or battery inverter.

Before maintenance, ensure that BOS-G Pro is decommissioned according to relevant Provisions.

Note: All maintenance work shall comply with local applicable regulations and standards.

The USB disk port of BOS-G Pro has the functions of upgrading firmware and recording battery data, which can be used as an auxiliary tool.

8.1 Maintenance of BOS-G Pro

To ensure safe operation, all plug connections must be checked. If necessary, relevant operators shall press them back into place at least once a year.

The following inspection or maintenance must be carried out once a year:

• General visual inspection

• Check all tightened electrical connections. Check the tightening torque according to the values in the following table. Loose connections must be retightened to the specified torque.

Connection mode	Tightening torque
High-voltage control box grounding	5 Nm
Fixing the lug of the high-voltage control box	1.5Nm
Fixing the lug of the battery module	1.5Nm

• Using the monitoring software, check whether the SoC, SoH, battery voltage and temperature of the battery module are abnormal.

• Shut down and restart BOS-G Pro once a year.

Note: If the system is installed in a polluted environment, maintenance and cleaning must be carried out at short intervals.

Note: Clean the battery rack with a dry-cleaning cloth. Ensure that no moisture comes into contact with the battery connections. Do not use solvents.

8.2 USB's Upgrade Step

1. USB type: USB2.0, FAT32;
2. Create the upgrade folder according to the directory;
3. Place the upgrade file Provided by the supplier in the upgrade folder;
4. Turn on the battery, and insert the USB flash disk after the blue indicator is on;
5. After the blue light indicator flashes and turns off, pull out the USB flash disk to complete the upgrade. Do not turn off the battery during the Process.
6. After the blue light indicator of the battery lights up again, check the version number through the screen or app and verify the upgrade result.

SOLARONE.RO® SISTEME FOTOVOLTAICE

9. Battery Module Storage

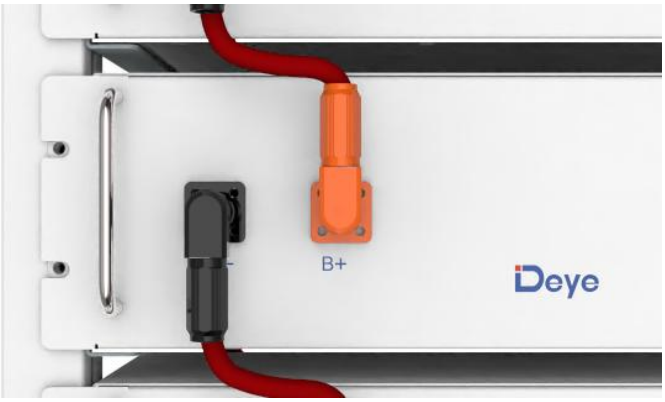

A. To ensure the battery service life, the storage temperature shall be kept between 0°C~35°C.

B. The battery shall be cycled at least once every 6 months.

C. To minimize self-discharge in a long storage period, disconnect the battery connection (1/2) of the high-voltage control box of the DC connecting cable. This will interrupt the use of the 12 V power supply installed in the high-voltage control box and prevent the battery from self-discharging.

SOLARONE.RO® SISTEME FOTOVOLTAICE

10. Disposal

For details related to the disposal of battery modules, please contact us. Service Hotline: +86 0574 8612 0560, Email: service-ess@deye.com.cn. For more information, please visit http://deyeess.com.

Observe applicable regulations on waste battery disposal. Immediately stop the use of damaged batteries. Please contact your installer or sales partner before disposal. Ensure that the battery is not exposed to moisture or direct sunlight.

Attention:

1. Do not dispose of batteries and rechargeable batteries as domestic waste!

You are legally obliged to return used batteries and rechargeable batteries.

2. Waste batteries may contain pollutants that can damage the environment or your health if imProperly stored or handled.

3. Batteries also contain iron, lithium and other important raw materials, which can be recycled.

For more information, please visit http://www.deyeess.com. Do not dispose of batteries as household waste!

SOLARONE.RO SISTEME FOTOVOLTAICE

11. Legal notice

Installation and Operation Manual for BOS-G Pro

Last revision: 12/2023

Subject to technical changes.

Deye ESS Technology Co., Ltd

Made in China

Legal Statement

The information contained in the document is the Property of Deye ESS Technology Co., Ltd. D

All information shall not be published in whole or in part without the written permission of Deye