Installation and Operation Instructions

LITHIUM STORAGE SYSTEM BOS-A

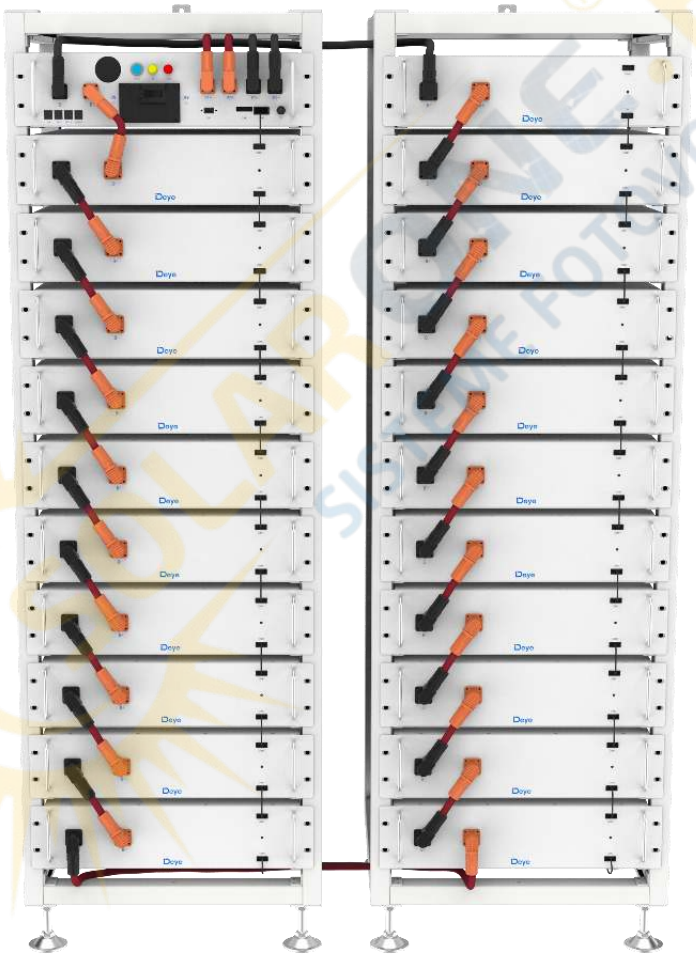

Version： V1.1

CONTENT

1.Important information in the manual 1

1.1 Scope 1

1.2 Description of BOS-A 1

1.3 Meaning of Symbols 2

1.4 General Safety Information 4

1.5 Disclaimer 4

1.6 Installation environment 5

1.7 Quality Certificate 6

1.8 Requirements for Installation Personnel 6

2. Safety 8

2.1 Safety rules 8

2.2 Safety information 8

3. Transport to the end customers 10

3.1 Provisions on Shipping of Battery Modules: 10

3.2 Storage Position of the battery packaging module 12

4. Description and installation of BOS-A battery 13

4.1 Installation Precautions 13

4.2 BOS-A Product Description 13

4.2.2 Product selection 15

4.3 Technical Data 18

4.4 Preparation 20

4.4.1 Tools required 20

4.4.2 Auxiliary Tools and Materials Required 20

4.4 Description of Rack 21

4.4.1 11-layer battery cluster rack Parts description 21

4.4.2 Installation of Rack 22

4.5 Description of Battery Module 23

4.7 Description of High-Voltage Control Box 24

4.8 Description of Battery Module in Rack 25

4.9 Right wiring method 28

4.10 Installation of the Battery Module to the Rack 30

4.10.1 Cable connection 31

4.10.2 Battery installation cable Description 32

4.11 Battery cluster connected to inverter 34

4.12 System startup and shutdown 39

4.14 External 12V Power Supply of High-Voltage Control Box 40

5. BOS-A' fault description 41

6.BOS-A screen displays the logic 45

7. Maintenance and upgrade 48

7.1 Maintenance of BOS-A 48

7.2 USB's Upgrade Step 49

8. Battery Module Storage 50

9. Disposal 51

10. Legal notice 52

1.Important information in the manual

1.1 Scope

The installation and operation manual applies to the modular battery energy storage system. Please carefully read this installation and operation manual to ensure the safe installation, preliminary debugging, and maintenance of BOS-A. Installation, preliminary debugging, and maintenance must be carried out by qualified and authorized personnel. Please keep this installation and operation manual and other applicable documents near the battery energy storage system, so that all personnel involved in installation or maintenance can access this installation and operation manual at any time.

This installation and operation manual only applies to countries meeting the certification requirements. Please observe the applicable local laws, regulations, and standards. Standards and legal provisions of other countries may be inconsistent with the provisions and specifications in this manual. In this case, please contact our after-sales service personnel, hotline: +86 0574 8612 0560, email: service-ess@deye.com.cn.

1.2 Description of BOS-A

Model	System energy (kWh)	Rated DC power (kW)	Discharge depth	Composition
BOS-A50	53.76	53.76	90%	BOS-A-PACK7.68*7+BOS-A-PDU-2 1000V/160A*1
BOS-A60	61.44	61.44	90%	BOS-A-PACK7.68*8+BOS-A-PDU-2 1000V/160A*1
BOS-A65	69.12	69.12	90%	BOS-A-PACK7.68*9+BOS-A-PDU-2 1000V/160A*1
BOS-A75	76.8	76.8	90%	BOS-A-PACK7.68*10+BOS-A-PDU-2 1000V/160A*1
BOS-A80	84.48	84.48	90%	BOS-A-PACK7.68*11+BOS-A-PDU-2 1000V/160A*1
BOS-A90	92.16	92.16	90%	BOS-A-PACK7.68*12+BOS-A-PDU-2 1000V/160A*1
BOS-A95	99.84	99.84	90%	BOS-A-PACK7.68*13+BOS-A-PDU-2 1000V/160A*1
BOS-A100	107.52	107.52	90%	BOS-A-PACK7.68*14+BOS-A-PDU-2 1000V/160A*1
BOS-A115	115.2	115.2	90%	BOS-A-PACK7.68*15+BOS-A-PDU-2 1000V/160A*1
BOS-A120	122.88	122.88	90%	BOS-A-PACK7.68*16+BOS-A-PDU-2 1000V/160A*1
BOS-A130	130.56	130.56	90%	BOS-A-PACK7.68*17+BOS-A-PDU-2 1000V/160A*1
BOS-A135	138.24	138.24	90%	BOS-A-PACK7.68*18+BOS-A-PDU-2 1000V/160A*1
BOS-A145	145.92	145.92	90%	BOS-A-PACK7.68*19+BOS-A-PDU-2 1000V/160A*1
BOS-A150	153.6	153.6	90%	BOS-A-PACK7.68*20+BOS-A-PDU-2 1000V/160A*1
BOS-A160	161.28	161.28	90%	BOS-A-PACK7.68*21+BOS-A-PDU-2 1000V/160A*1

1.3 Meaning of Symbols

This manual contains the following types of warnings:

Danger! It may cause an electric shock.

Even when the equipment is disconnected from the power grid, the voltage-free state will have a time lag.

Danger! If the instructions are not observed, death or severe injury may occur.

Warning! If the instructions are not observed, a loss may occur.

Attention! This symbol represents information on the device use.

Symbols on equipment:

The following types of warning, prohibition, and mandatory symbols are also used on the equipment.

Attention! The risk of chemical burns

If the battery is damaged or fails, it may lead to electrolyte leakage, which in turn causes the formation of a small amount of hydrofluoric acid, among other effects. Contact with these liquids can cause chemical burns.

• Do not subject the battery module to severe impact.

• Do not open, disassemble or mechanically change the battery module.

• In case of contact with an electrolyte, wash the affected area with clean water immediately and seek medical advice promptly.

Attention! The risk of explosion

Incorrect operation or fire may cause the lithium-ion battery unit to ignite or explode, leading to serious injury.

• Do not install or operate the battery module in explosive or high-humidity areas.

• Store the battery module in a dry place within the temperature range specified in the data sheet.

• Do not open, drill through or drop the battery cell or module.

• Do not expose the battery cell or module to high temperatures.

• Do not throw the battery cell or module into the fire.

• When the lithium battery catches fire after being plugged in with AC power, unplug the power supply first to prevent electric shock during fire fighting.

• If there is an open flame, use carbon dioxide or ABC dry powder fire extinguisher to put out the fire, and then cool down by using the nearby fire hydrant or pouring water until no white smoke appears and the battery is completely cooled down. After extinguishing the fire, continue to monitor the battery for at least 1 hour to prevent re-ignition.

• If there is no open flame but a large amount of white smoke comes out of the battery, it is recommended to use a 6L portable water-based fire extinguisher (if any), and then cool down by using the nearby fire hydrant or pouring water until no white smoke appears and the battery is completely cooled down. After extinguishing the fire, continue to monitor the battery for at least 1 hour to prevent re-ignition.

• Do not use defective or damaged battery modules.

Caution! Hot surface

• If a malfunction occurs, the parts will become very hot, and touching them may cause serious injury.

• If the energy storage system is defective, please shut it down immediately.

• If the fault or defect becomes obvious, special care should be taken when handling the equipment.

No open fire! It is prohibited to handle open flames and ignition sources near the energy storage system.

Do not insert any objects into the opening in the housing of the energy storage system!

No objects, such as screwdrivers, may be inserted through openings in the casing of the storage system.

Wear safety goggles! Wear safety goggles when working on the equipment.

Follow the manual! When working and operating the equipment, the installation and operation manual provisions must be observed.

1.4 General Safety Information

Danger! Failure to comply with the safety information can lead to life-threatening situations.

1. Improper use can cause death. Operators of BOS-A must read this manual and observe all safety information.

2. Operators of BOS-A must comply with the specifications in this manual.

3. This manual cannot describe all conceivable situations. For this reason, applicable standards and relevant occupational health and safety regulations are always given priority.

4. In addition, the installation may involve residual hazards in the following circumstances:

• Incorrect installation.

• The installation is carried out by personnel who did not receive relevant training or guidance.

• Failure to observe the warnings and safety information in this manual.

If there are any questions, please contact Deye after service.

1.5 Disclaimer

DEYE ESS TECHNOLOGY CO., LTD shall not be liable for personal injury, property loss, product damage and subsequent losses under the following circumstances.

• Failure to comply with the provisions of this manual.

• Incorrect use of this product.

• Unauthorized or unqualified personnel repair the product, disassembly the rack and perform other operations.

• Use of unapproved spare parts.

• Unauthorized modifications or technical changes to the product.

1.6 Installation environment

• The battery energy storage system can only be installed and operated in an enclosed space. The working environment temperature range of BOS-A is -20℃~ 55℃, and the maximum humidity is 85%. The battery module shall not be exposed to the sun or placed directly beside the heat source.

• The battery module shall not be exposed to a corrosive environment.

• When installing the battery energy storage system, ensure that it stands on a sufficiently dry and flat surface with sufficient bearing capacity. Without the manufacturer's written approval, the installation site's altitude shall not be higher than 3,000 meters. The output power of the battery decreases with the altitude.

• In areas where flooding may occur, care must be taken to ensure that the battery module is installed at a suitable height and to prevent its contact with water.

• The battery energy storage system must be installed in a fireproof room. This room must have no fire source and must be equipped with an independent fire alarm device, which complies with local applicable regulations and standards. According to local applicable regulations and standards, the room must be separated by the T60 fire door. Similar fire-proof requirements apply to other openings in the room (such as windows).

Compliance with the specifications in this manual is also part of proper use.

The use of the BOS-A system is prohibited in the following circumstances:

• Mobile use on land or in the air (use on water only with the manufacturer's consent and with the manufacturer's written consent).

• Used in medical devices.

• Used as a UPS system.

Minimum product installation distance

The minimum distance to the surrounding building when the battery is installed is 100mm, and the minimum distance between the two products is 100mm.

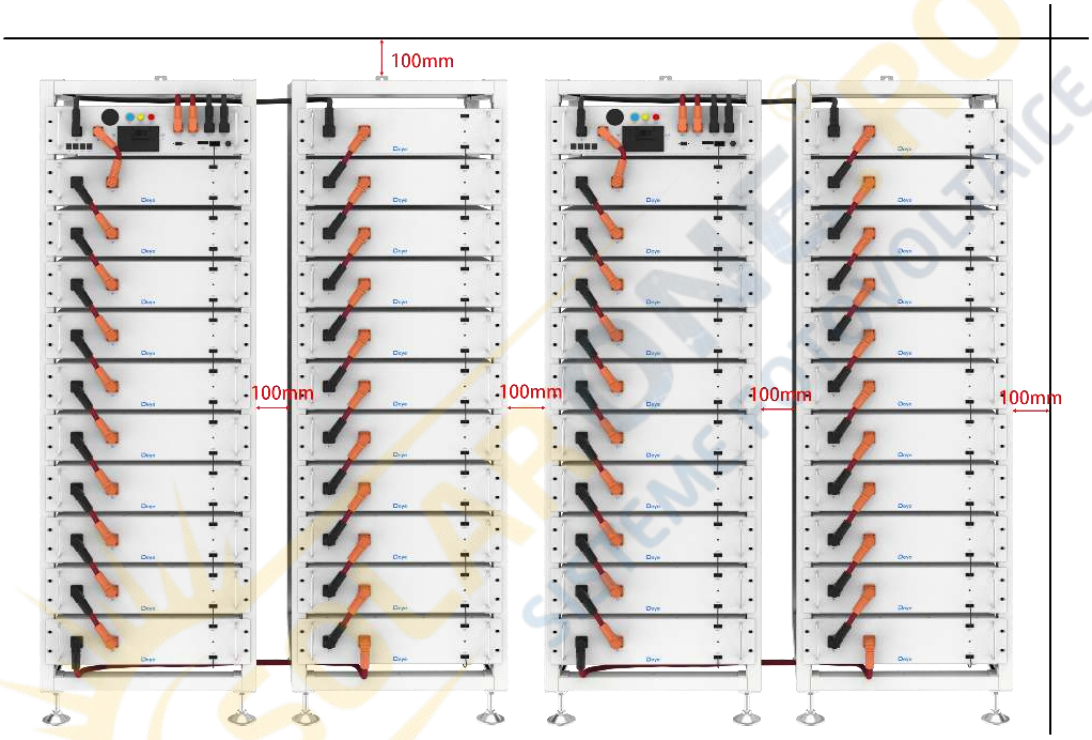

1.7 Quality Certificate

The quality certificate can be downloaded from www.deyeess.com.

1.8 Requirements for Installation Personnel

All work shall comply with local applicable regulations and standards.

The installation of BOS-A can only be completed by electricians with the following qualifications:

• Trained in dealing with hazards and risks associated with the installation and operation of electrical equipment, systems, and batteries.

• Trained on installation and debugging of electrical equipment.

• Understanding and complying with the technical connection conditions, standards, guidelines, regulations, and laws applicable.

• Knowledge of handling lithium-ion batteries (transportation, storage, disposal, hazard source).

• Understanding and complying with this document and other applicable documents.

SOLARONE.RO® SISTEME FOTOVOLTAICE

2. Safety

2.1 Safety rules

To avoid property damage and personal injury, the following rules shall be followed when working on the hazardous live parts of the battery energy storage system:

• It is available for use.

• Ensure that it will not restart.

• Make sure there is no voltage.

• Grounding protection and short circuit protection

• Cover or shield adjacent live parts.

2.2 Safety information

Part damage or short circuit may cause electric shock and death. A short circuit can be caused by connecting battery terminals, resulting in current flow. This type of short circuit shall be avoided under any circumstances. For this reason, follow these instructions:

• Use insulated tools and gloves.

• Do not put any tools or metal parts on the battery module or high-voltage control box.

• When operating the battery, be sure to remove watches, rings, and other metal objects.

• Do not install or operate this system in explosive or high-humidity areas.

• When working on the energy storage system, first turn off the charging controller, then the battery, and ensure that they are not turned on again.

Improper use of the battery energy storage system can lead to death. The use of the battery energy storage system beyond its intended use is not allowed, because it may cause great danger. **Improper** handling of the battery energy storage system can cause life-threatening risks, serious injury or even death.

Warning! Improper use can cause damage to the battery cell.

- Do not expose the battery module to rain or soak it in liquid.
- Do not expose the battery module to a corrosive environment (such as ammonia and salt).
- The battery energy storage system shall be debugged no later than six months after delivery.

SOLARONE.RO® SISTEME FOTOVOLTAICE

3. Transport to the end customers

3.1 Provisions on Shipping of Battery Modules:

It is necessary to comply with the relevant regulations and provisions on roads for shipping lithium-ion products in the corresponding countries.

It is prohibited to smoke in the vehicle during transportation or in the vicinity during loading and unloading.

The dangerous goods transport vehicles shall meet relevant regulations concerning road transportation and shall be equipped with two tested CO2 fire extinguishers.

It is forbidden for the freight forwarder to open the outer package of the battery module. Use only approved lifting equipment to move the battery cabinet system. Use only the hanging lug on the top of the battery cabinet as the connection point. When lifting, the angle of the sling must be at least 60°.

Improper vehicle transportation can cause injury. Improper transportation or improper transportation locks may cause the load to slip or overturn, resulting in injury. The cabinet shall be placed vertically to prevent it from sliding in the vehicle, and a fixing belt shall be used.

A tilting of the battery rack may cause injury. The maximum weight of a single battery rack of BOS-A can reach 985 kg. When tilted, they may overturn, causing injury and damage. Ensure that the battery cabinet is on a stable surface and that it does not tilt due to load or force.

The battery energy storage system can be damaged, if not properly transported. The battery module can only be transported vertically. Note that these parts may be top-heavy. Failure to follow this instruction may result in damage to the part.

During transportation, the battery storage rack may be damaged when it is installed with the battery module. The battery storage rack is not designed to be transported with the installed battery modules. Always transport the battery module and the battery rack separately. Once the battery module is installed, do not move the battery rack, and do not lift it by a lifting device.

If possible, do not remove the transport packaging before arrival at the installation site. Before removing the transport protector, check if the transport packaging is damaged, and check the impact indicator on the outer packaging of the battery converter. If the impact indicator is triggered, the possibility of transport damage cannot be ruled out.

Improper transportation of battery modules may cause injury. The single battery module weighs 70 kg. If it falls or slips, it may cause injury. Only use suitable transport and lifting equipment to ensure safe transport.

Wear safety shoes to avoid the danger of injury. When transporting the battery rack and battery module, their parts may be crushed due to their heavy weight. Therefore, all persons involved in transportation must wear safety shoes with toe caps. Please observe the safety regulations for transportation at the end customer's site, especially during loading and unloading.

During transportation and installation of unpacked battery storage cabinets, the risk of injury increases, especially on sharp metal panels. Therefore, all personnel involved in transportation and installation must wear protective gloves.

The maximum weight of a single rack of BOS-A can reach 985 kg. We suggest that at least 2-3 people work together to install the battery rack. The lifting device is helpful for heavy parts, and the pulley or cart for light parts. Be careful not to damage the case. The number of battery modules stacked shall not be more than 8.

Check whether the delivery is complete.

3.2 Storage Position of the battery packaging module

The battery module can only be transported in an upright position. Please note that the battery rack may be very top-heavy.

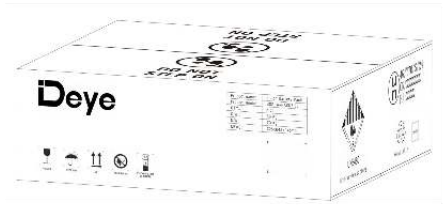

√

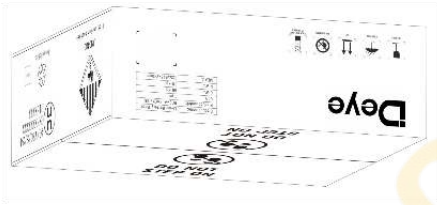

×

SOLARONE.RO®
SISTEME FOTOVOLTAICE

4. Description and installation of BOS-A battery

4.1 Installation Precautions

WARNING! Possible damage to the building due to static overload

1. The total weight of the battery storage system is 1586kg. Ensure that the installation site has sufficient bearing capacity.
2. When selecting the installation site, consider the transportation route and necessary site cleanup.

4.2 BOS-A Product Description

BOS-A is a high-voltage lithium-ion battery system. It provides a reliable backup power supply for supermarkets, banks, schools, farms and small factories to smooth the load curve and achieve peak load transfer. It can also improve the stability of renewable systems and promote the application of renewable energy.

It is characterized by high integration, good reliability, long service life, wide working temperature range, etc. The battery energy storage system is modular. Each battery module has a capacity of 7.68 kWh. It can support up to 21 battery modules in series. Its total energy can be expanded from 53.76(7×7.68) kWh to 161.28(21×7.68) kWh.

SOLARONE.RO® SISTEME FOTOVOLTAICE

SOLARONE®RO
SISTEME FOTOVOLTAICE

4.2.2 Product selection

We offer our customers three options:
The first option: requires 7 to 10 battery modules can choose a 11-layer product solution. The product appearance is shown in the following figure:

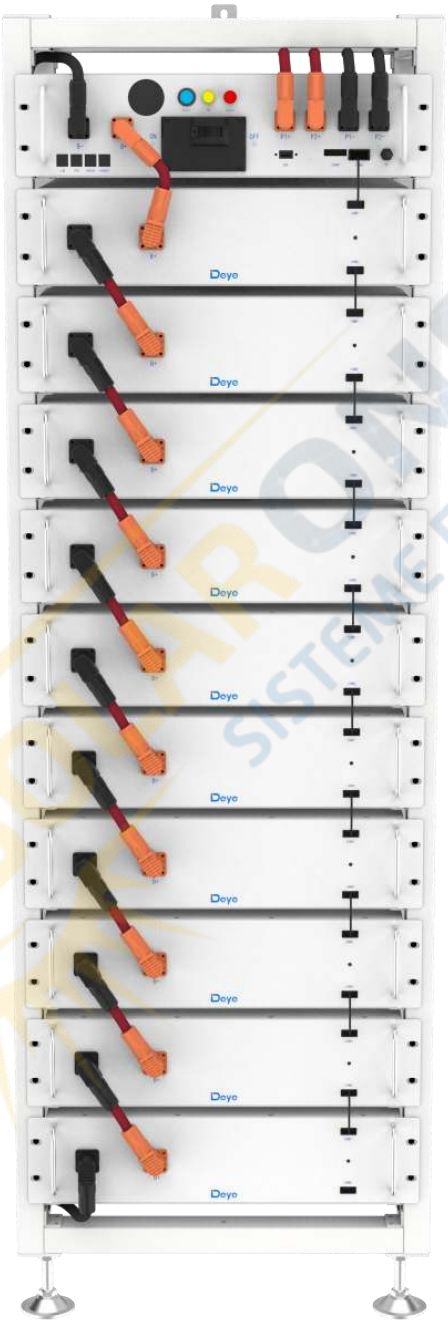

SOLAROME.RO
SISTEME FOTOVOLTAICE

The second option: need 11~13 battery modules can choose 14-layer product solution. The product appearance is shown in the following figure:

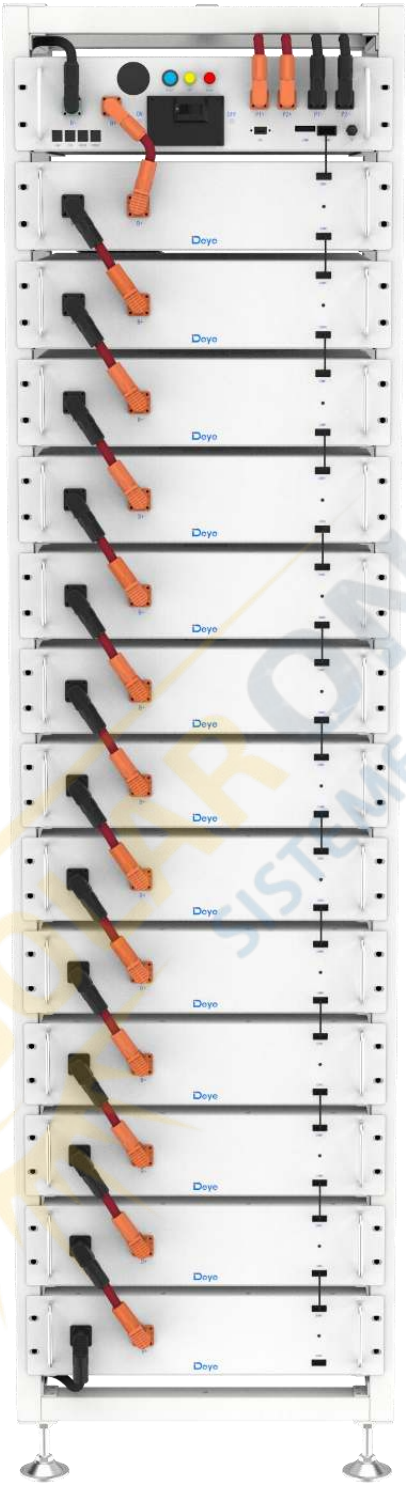

The third option: need 14~21 battery modules can choose two 11-layer product solution. The product appearance is shown in the following figure:

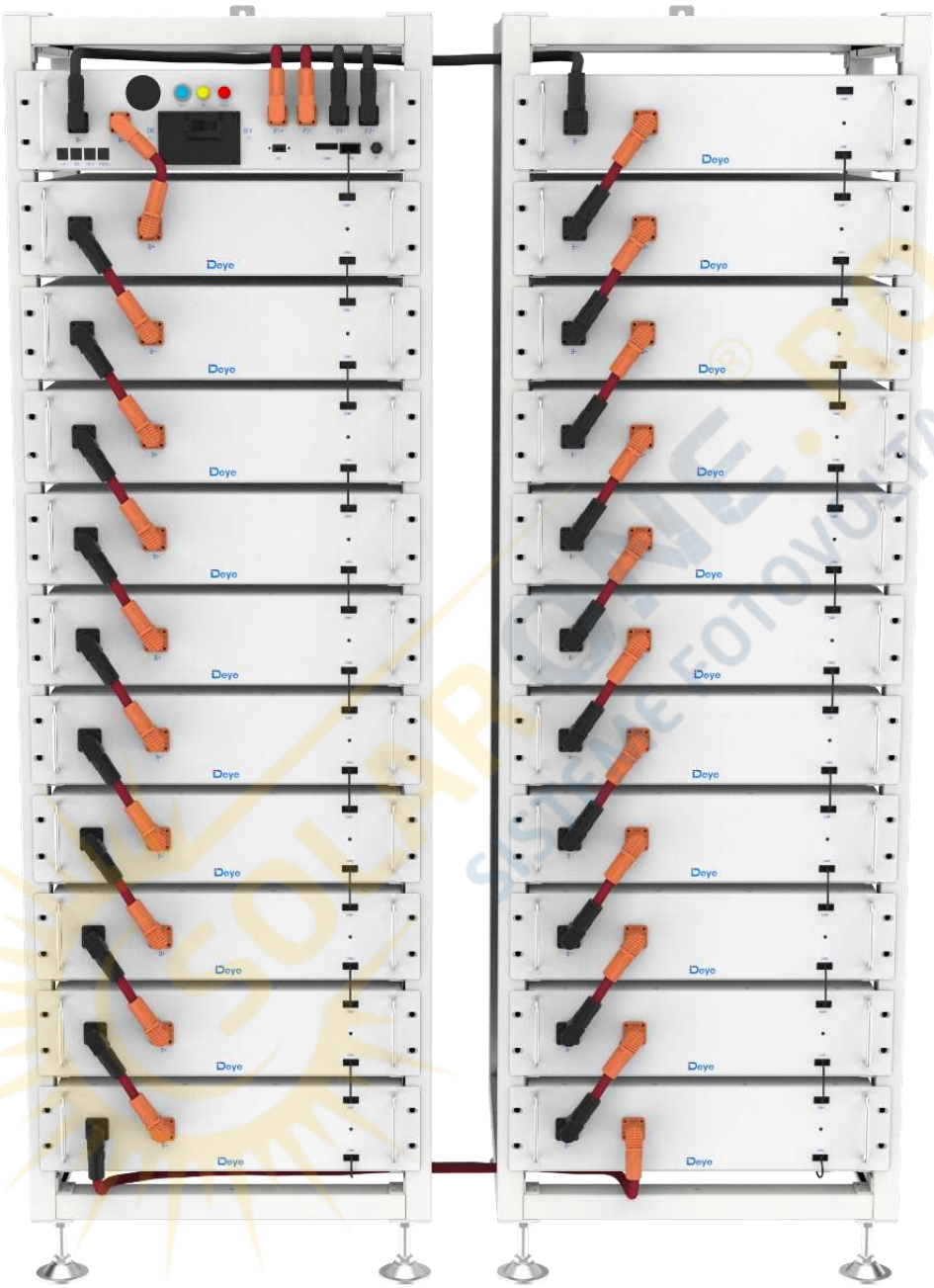

4.3 Technical Data

The energy of the battery system (7~21 battery modules)	7 battery modules	53.76 kWh
	8 battery modules	61.44 kWh
	9 battery modules	69.12 kWh
	10 battery modules	76.8 kWh
	11 battery modules	84.48 kWh
	12 battery modules	92.16 kWh
	13 battery modules	99.84 kWh
	14 battery modules	107.52 kWh
	15 battery modules	115.2 kWh
	16 battery modules	122.88 kWh
	17 battery modules	130.56 kWh
	18 battery modules	138.24 kWh
	19 battery modules	145.92 kWh
	20 battery modules	153.6 kWh
	21 battery modules	161.28 kWh
Charge-discharge rate (Max)	0.8C	
Battery cell chemistry	$LiFePO_4$	
Maximum charging/discharging current	160A	

Module capacity	200Ah	
Working voltage	7 battery modules	235.2~306.6V
	13 battery modules	436.8~569.4V
	21 battery modules	705.6~919.8V
Working temperature	Charge: 0 ~ 55℃/Discharge:-20 ~ 55℃	
Humidity	5% - 85% (RH)	
The altitude of the installation site	≤ 3000 m	
Dimensions (H x W x D)	11-layer: 1900×610×610mm	
	14-layer: 2350×610×610mm	
	Two 11-layer: 1900×1320×610mm	
Warranty period	10 years	
The total weight (7 battery modules, 1 rack)	558 kg	
The total weight (13 battery modules, 1 rack)	985 kg	
The total weight (21 battery modules, 2 rack)	1586 kg	
Weight of each battery module/11 battery rack /14 battery rack	66kg/47kg/55kg	
Case protection grade	IP20	
Certification	CE/IEC62619/IEC 62040/ UN38.3 /VDE-2510	

SOLARONE.RO® SISTEME FOTOVOLTAICE

4.4 Preparation

4.4.1 Tools required

TOOL	USE
PHILIP2# hex wrench	•Refer to installation instructions for 11-layer battery cluster rack
10mm hexagon socket	• Fix the expansion screw
24mm wrench	• Adjust the height of the base and tighten the nut.

4.4.2 Auxiliary Tools and Materials Required

AID/MATERIAL Auxiliary tools/materials	USE
Fastening materials (M4*12 M6*12 screws, M6*100 expansion screws, M6 nuts)	1. Assemble the battery racks and fix them on the wall or connect the two racks. 2. Assemble the battery modules and high-voltage control boxes, and fix them to the racks.

4.4 Description of Rack

4.4.1 11-layer battery cluster rack Parts description

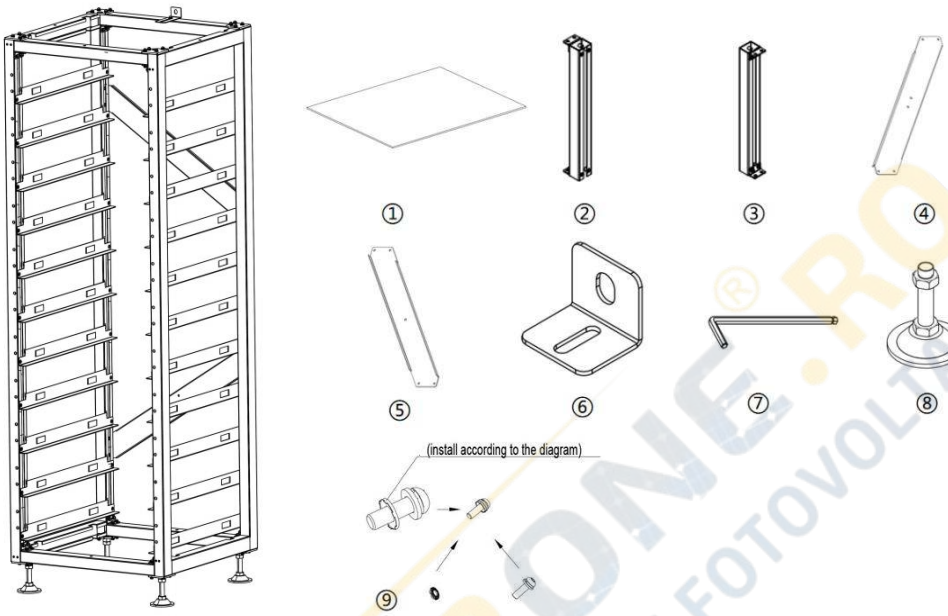

No.	Description
①	Heat insulation foam
②	Crossbeam
③	Big tripod
④	Small tripod
⑤	L-bracket assembly
⑥	Rack fastener
⑦	Bottom plate parts
⑧	Base
⑨	Diagonal brace

SOLARONE.RO® SISTEME FOTOVOLTAICE

4.4.2 Installation of Rack

1. Take out two side beams and upper and lower crossbeams to form a rectangular frame, connect with side beams and crossbeams using big tripods and small tripods, and then fix big and small triangular supports with side beams and crossbeams using M6*12 outer hexagon cross combination screws and a PHILIP2 # screwdriver.
2. Use a PHILIP2 # screwdriver and M6*12 outer hexagon cross combination screws to fix the L-bracket assembly horizontally on the side beam.
3. Fix the diagonal brace on two side beams using M6*12 outer hexagon cross combination screws and a screwdriver.
4. Fix the four bottom plates on four corners of the lower rack using the M6*12 outer hexagon cross combination screws and a PHILIP2# screwdriver.
5. Screw the base into the bottom plate and fix it with a PHILIP2# screwdriver or by hand.
6. To fix the rack on the wall, use a PHILIP2# screwdriver to install the rack fastener at the M6 screw hole above the rack and fix it with M6*12 outer hexagon cross combination screws. Fix the other side of the rack with the wall using M6*100 expansion screws. To fix two racks together, install the rack fastener at the M6 screw hole above the rack, and fix them together with M6*12 outer hexagon cross combination screws and M6 nuts.

Note: Please read the manual for reference.

SOLARONE.RO® SISTEME FOTOVOLTAICE

4.5 Description of Battery Module

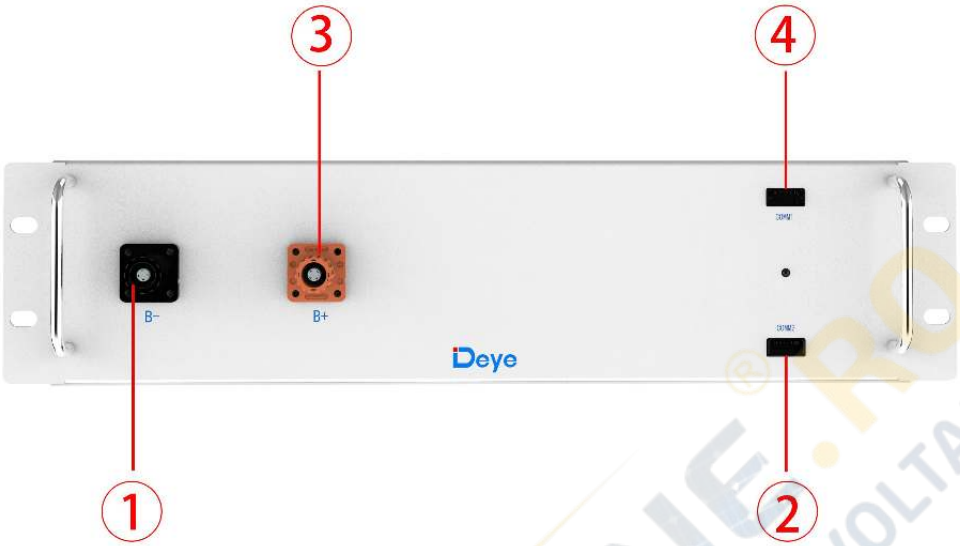

No.	Name	Description
①	B-	Battery module negative pole (black)
②	COMM2	Connection position of battery module communication and power supply output
③	B+	Battery module positive pole (orange)
④	COMM1	Connection position of battery module communication and power supply input

SOLARONE.RO SISTEME FOTOVOLTAICE

4.7 Description of High-Voltage Control Box

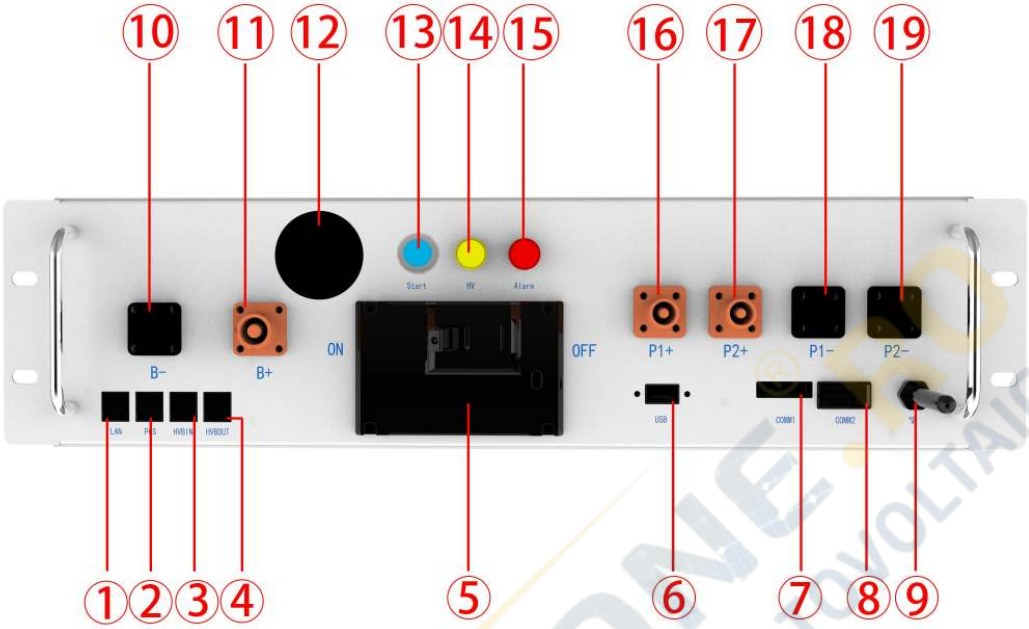

No.	Name	Description
①	Ethernet	Features not yet developed
②	PCS COM	PCS COM battery communication terminal: (RJ45 port) follow the CAN protocol (default baud rate: 500bps) and RS485 protocol (default baud rate:9.6bps), used to output battery information to the inverter.
③	IN COM	Connection position with previous BOS-G-PDU-2 communication input
④	OUT COM	Connection position with next BOS-A communication output
⑤	Air switch	It is used to manually control the connection between the battery rack and external devices
⑥	UBS	BMS upgrade port and storage expansion port
⑦	COMM1	Connection position of external 12VDC power supply
⑧	COMM2	Communicative connection with the first battery module; and providing 12VDC power for the first battery module.
⑨	Bluetooth	The mobile APP connects to the data acquisition rod of the energy storage system
⑩	B-	Battery common negative connection position (black)
⑪	B+	Battery common positive connection position (red)
⑫	Display screen	Display SOC and fault codes

⑬	START	A start switch of 12VDC power inside the high-voltage control box
⑭	HV light indicator	High-voltage hazard indicator (yellow)
⑮	ALRM light indicator	Battery system fault alarm indicator (red)Y
⑯	PCS1-	First PCS negative connection position (black)
⑰	PCS2-	Second PCS negative connection position (black)
⑱	PCS1+	First PCS positive connection position (orange)
⑲	PCS2+	Second PCS positive terminal connection position (orange)

4.8 Description of Battery Module in Rack

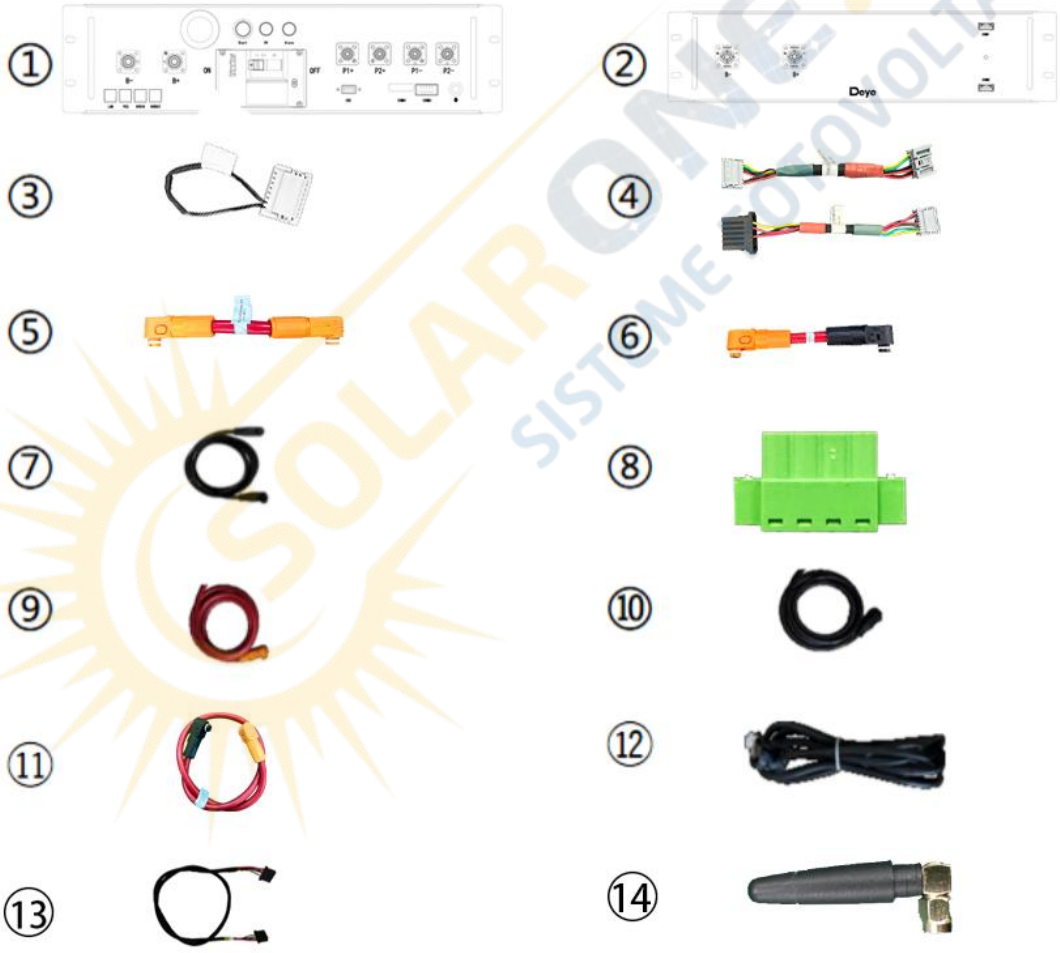

SOLARONE.RO SISTEME FOTOVOLTAICE

No.	Description		quantity
①	High-voltage control box 1000V/160A	Standard	1
②	7.68kWh battery module (general)	Standard	1
③	120ohm terminal resistor	Standard	1
④	Communication cable (110 mm for battery module, 200 mm for high-voltage control box) CAT5E FTP 24AWG black	Standard	22
⑤	180 mm positive power cord of high-voltage control box UL 10269 2AWG red	Standard	1
⑥	180 mm power cord of battery module UL 10269 1AWG red	Standard	15
⑦	The negative power cord of the high-voltage control box	Standard	1
⑧	12V auxiliary power terminal and emergency power-off interface	Standard	1
⑨	Connected to external PCS positive power cord (EPCable5.0) UL 10269 4AWG black	Standard	2
⑩	Connected to external PCS negative power cord (ENCable5.0) UL 10269 4AWG red	Standard	2
⑪	1000mm power cable between the two battery racks	Standard	1
⑫	Connected to external inverter communication cable (ECOM Cable2.0)	Standard	1
⑬	1000mm communication cable between the two battery racks	Standard	1
⑭	Light baton	Standard	1

SOLARONE.RO® SISTEME FOTOVOLTAICE

Definition of external interfaces on the front panel of the high voltage box

Definition of PCS communication interface		Racks in parallel IN		Racks in parallel OUT		Definition of power	
1		1	BMS_CANL	1	BMS_CANL	1	12V
2		2	BMS_CANH	2	BMS_CANH	2	GND
3		3	DI+	3	DO+	3	YL_ZLA
4	PCANH	4	DI-	4	DO-	4	YL_ZLB
5	PCANL	5		5			
6		6		6			
7		7		7			
8		8		8			
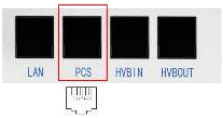		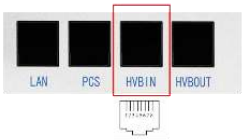		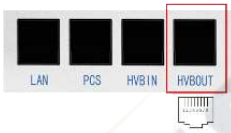			

Defines the external interface of a battery pack

Definition of the battery module interface			
Comm1		Comm2	
1	INT_CANH	1	INT_CANH
2	INT_CANL	2	INT_CANL
3	DI-	3	DI-
4	DI+	4	DI+
5	PGND	5	PGND
6	DO+	6	DO+
7	PGND	7	PGND
8	BMU_L+	8	BMU_L+
COMM1		COMM2	

4.9 Right wiring method

Connect cables correctly according to the figure.
Two 11-layer:

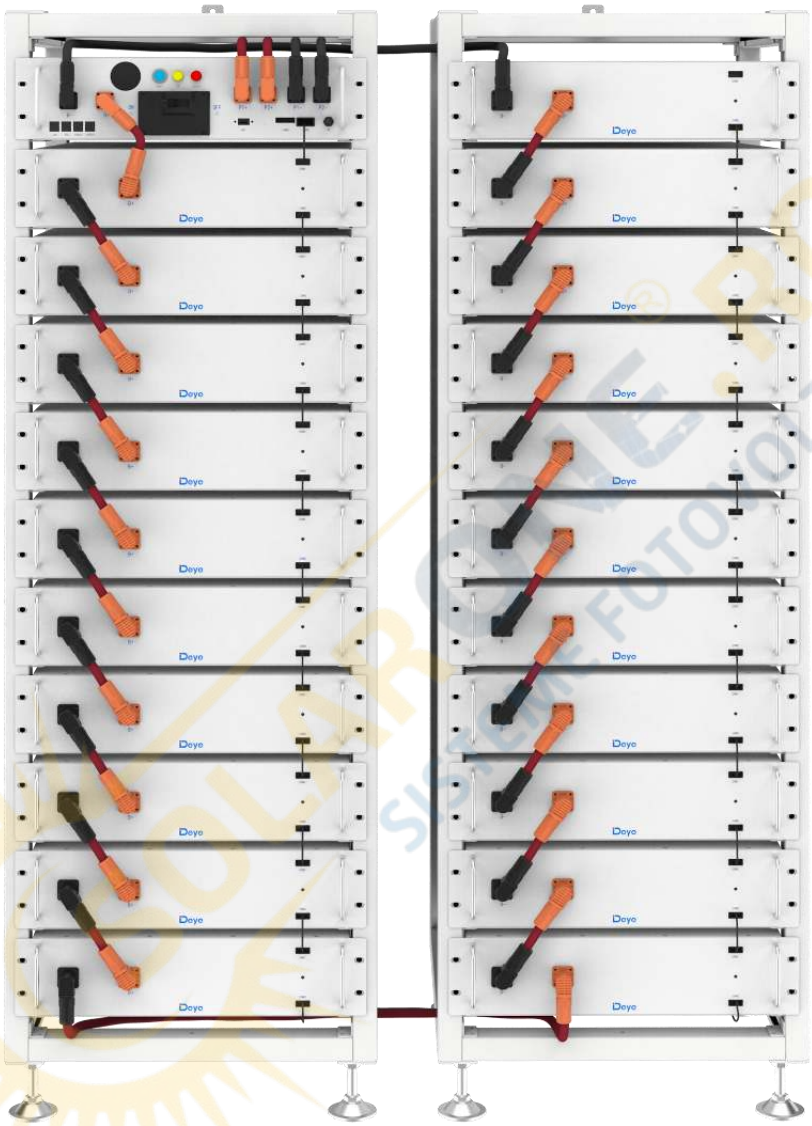

11-layer and 14-layer:

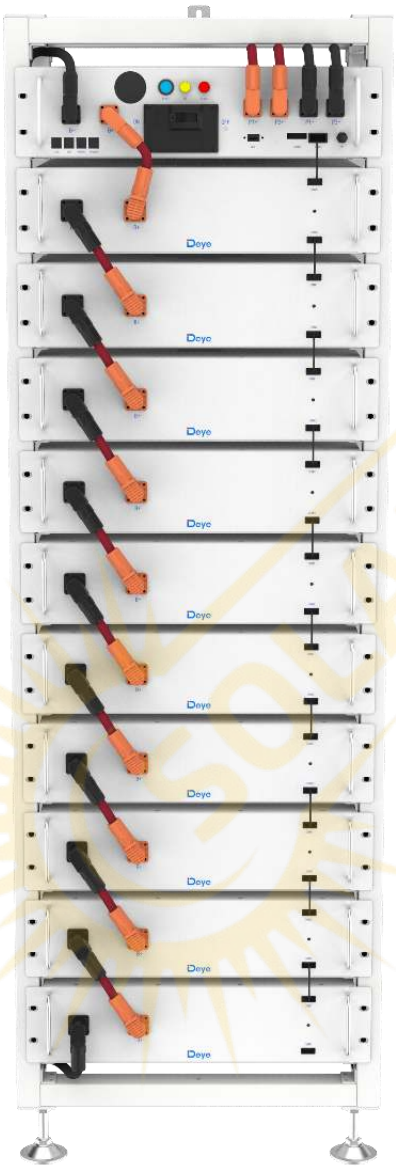

4.10 Installation of the Battery Module to the Rack

Insufficient or no grounding may cause an electric shock. Device malfunctions, and insufficient or no grounding may cause device damage and life-threatening electric shocks.

Note: Before installing the battery, please turn the manual switch of the high-voltage control box to the off position.

Note: Before installing the battery, the minimum distance to the surrounding buildings or other objects is 5mm.

CAUTION

Remember that this battery is heavy! Please be careful when lilting out from the package.

CAUTION

Note the allowable installation modes：

SOLARONE.RO SISTEME FOTOVOLTAICE

1. For the correct installation method shown in the first picture, stack battery packs from bottom to top, and place the high pressure box on the top of the cluster rack. Insert the slide of the cabinet at the top of the rack into the high-voltage control box.
2. After the battery module and control box is inserted into the rack, use M6*20 hex socket combination screws to fix all the lugs of the battery module and control box on the side beam in turn.

4.10.1 Cable connection

1. Grounding description

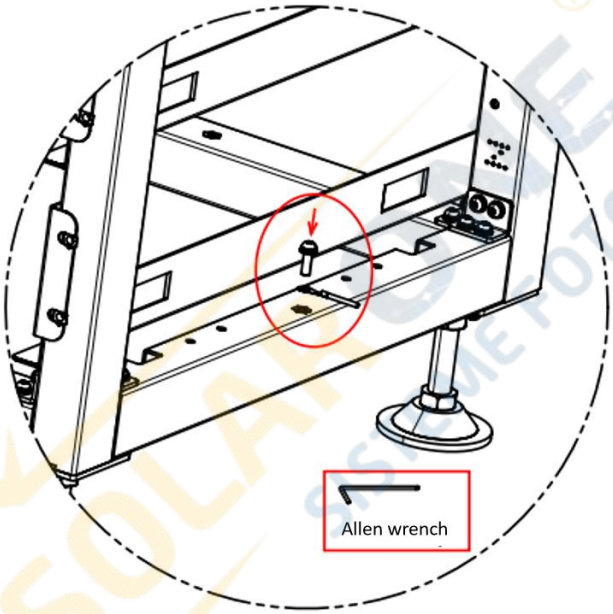

Connect one end of the ground cable to the cluster rack and the other end to the ground bar at the installation site.

4.10.2 Battery installation cable Description

For details on how to connect all cables, see Section 4.8.

When connecting cables, observe the installation diagram and pay attention to the direction of the communication cables. Otherwise, the products may not work properly due to incorrect cable installation.

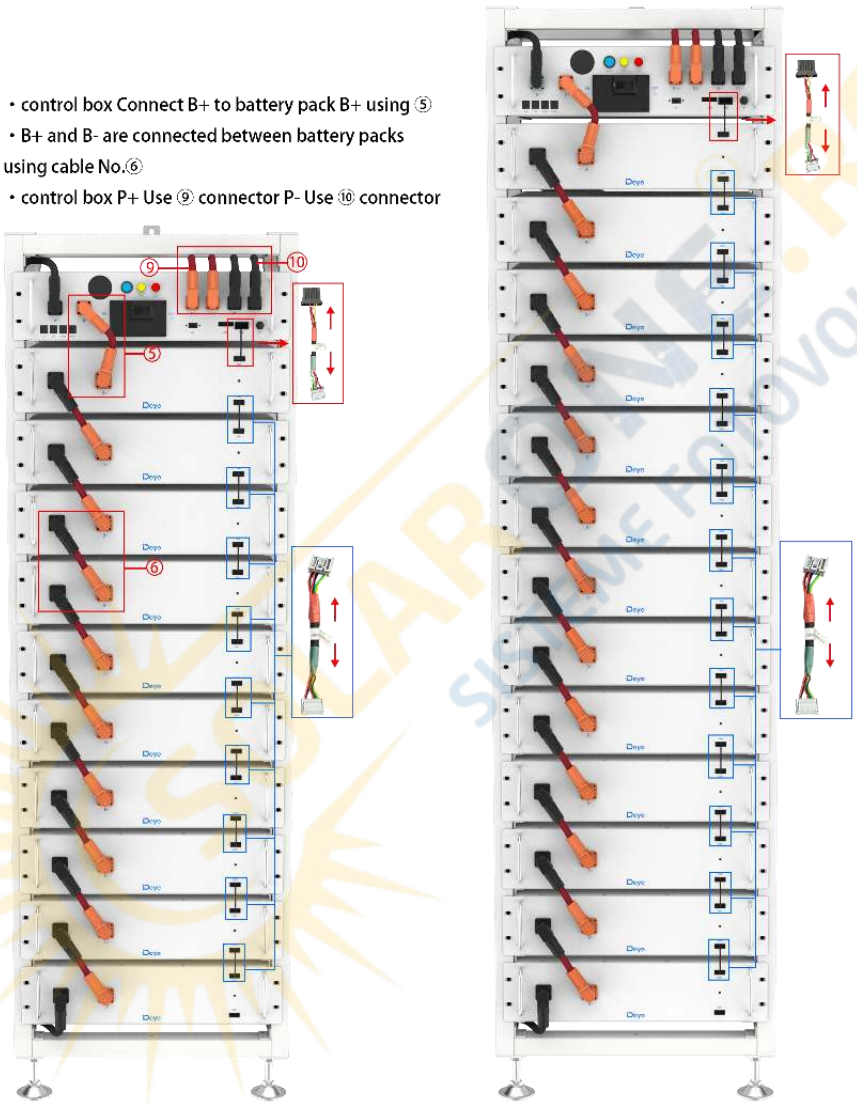

SOLARONE.RO SISTEME FOTOVOLTAICE

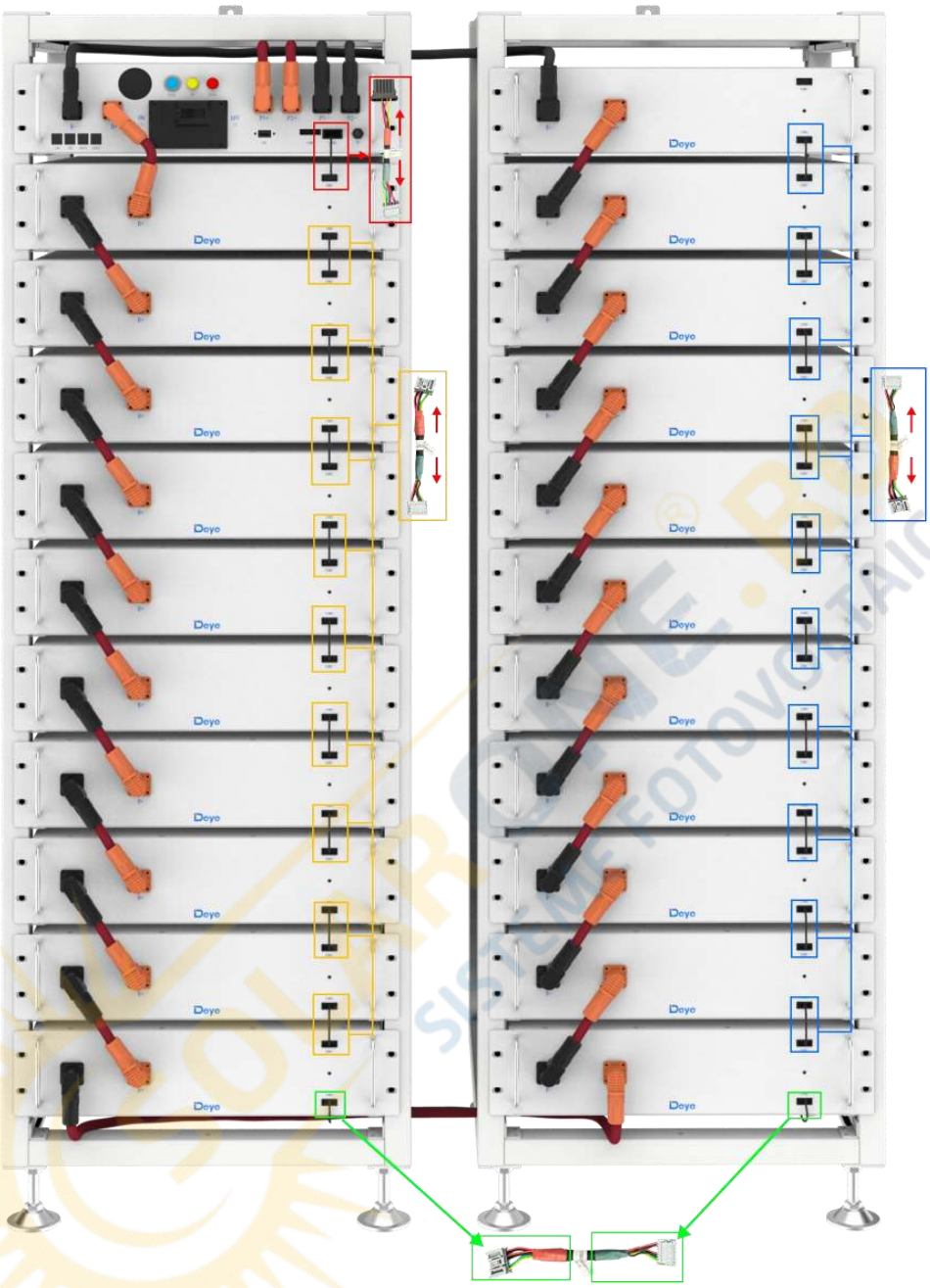

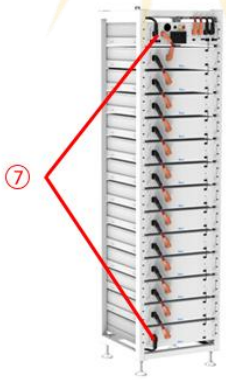

control box B- and bottom battery pack B- are connected using cable number ⑦.

3. After the battery module is placed in the control box, take out a 200 mm communication cable to connect the communication port of the battery module and the high-voltage control box, and 11x160mm communication cables to connect the battery module communication port (IN-OUT) from top to bottom.

✧ The OUT communication port of the last battery module does not need to be connected to communication cable. Instead, this port is sealed with a 120ohm terminal resistor.

4. Take out a 180 mm positive power cord and connect the positive pole of the battery module at the top to the positive pole of the high-voltage control box. Take out 22x110mm battery module power cords and connect the power ports (B- to B+) in a top to bottom order to form a series circuit. For aesthetics, connect the negative power pole of the first battery module to the negative power pole of the high-voltage control box from the bottom of the battery module to the back of the rack. On the back of the rack, a plane-head-shaped tie is used to secure the cable harness.
5. Take out the external positive power cord EPCable2.0 and external negative power cord ENCable2.0, and plug them into PCS interfaces, respectively.
6. Take out the ground wire A and connect one end of it to the M4 rivet nut of the high-voltage control box panel, and the other end to any M6 screw hole of the cross beam above the rack. Take out the ground wire B (user need to prepare in advance) and connect one end of it to any M6 screw hole of the cross beam under the rack, and the other end to the customer's grounding point. (The length of the ground wire B is determined based on the customer's condition.)

4.11 Battery cluster connected to inverter

For the Australian Market, an over-current protection and isolation device that isolates both positive and negative conductors simultaneously is required between the battery system and inverter

Battery cluster connected to inverter

Notice: The length of the communication line between the inverter and the battery should not exceed 30m.

Single battery cluster connected to inverter

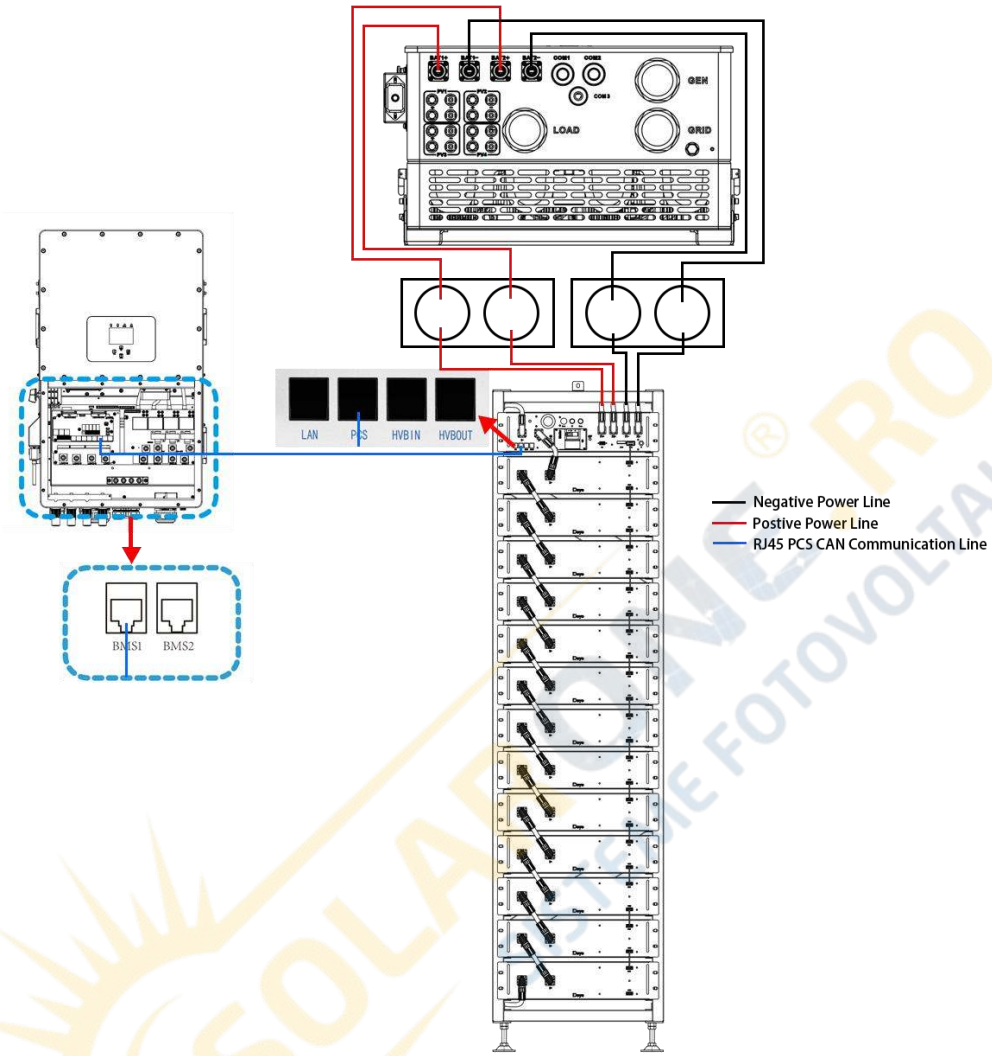

Two battery clusters connected to the inverter

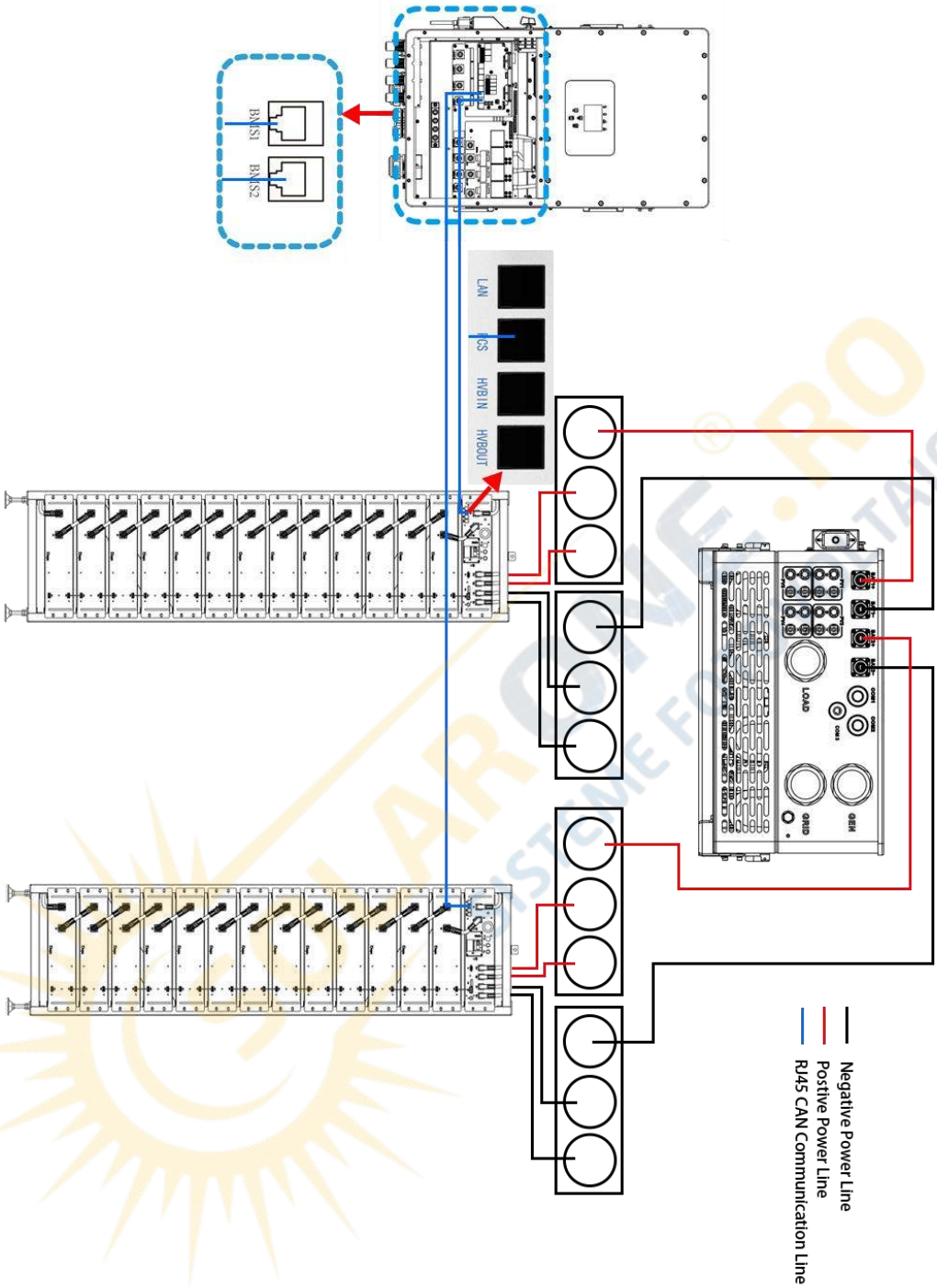

Three battery clusters connected to the inverter

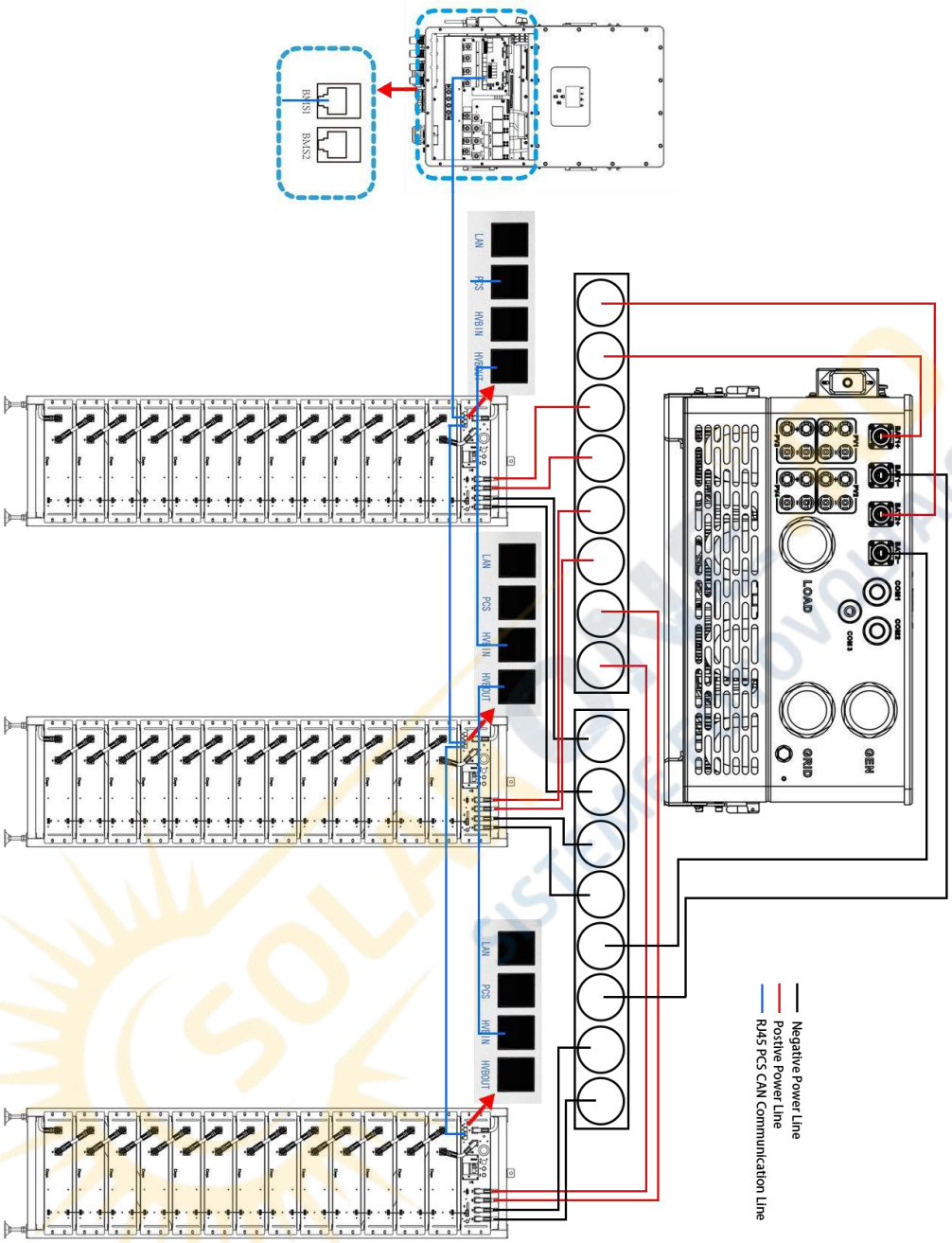

Multiple battery packs are connected to the inverter

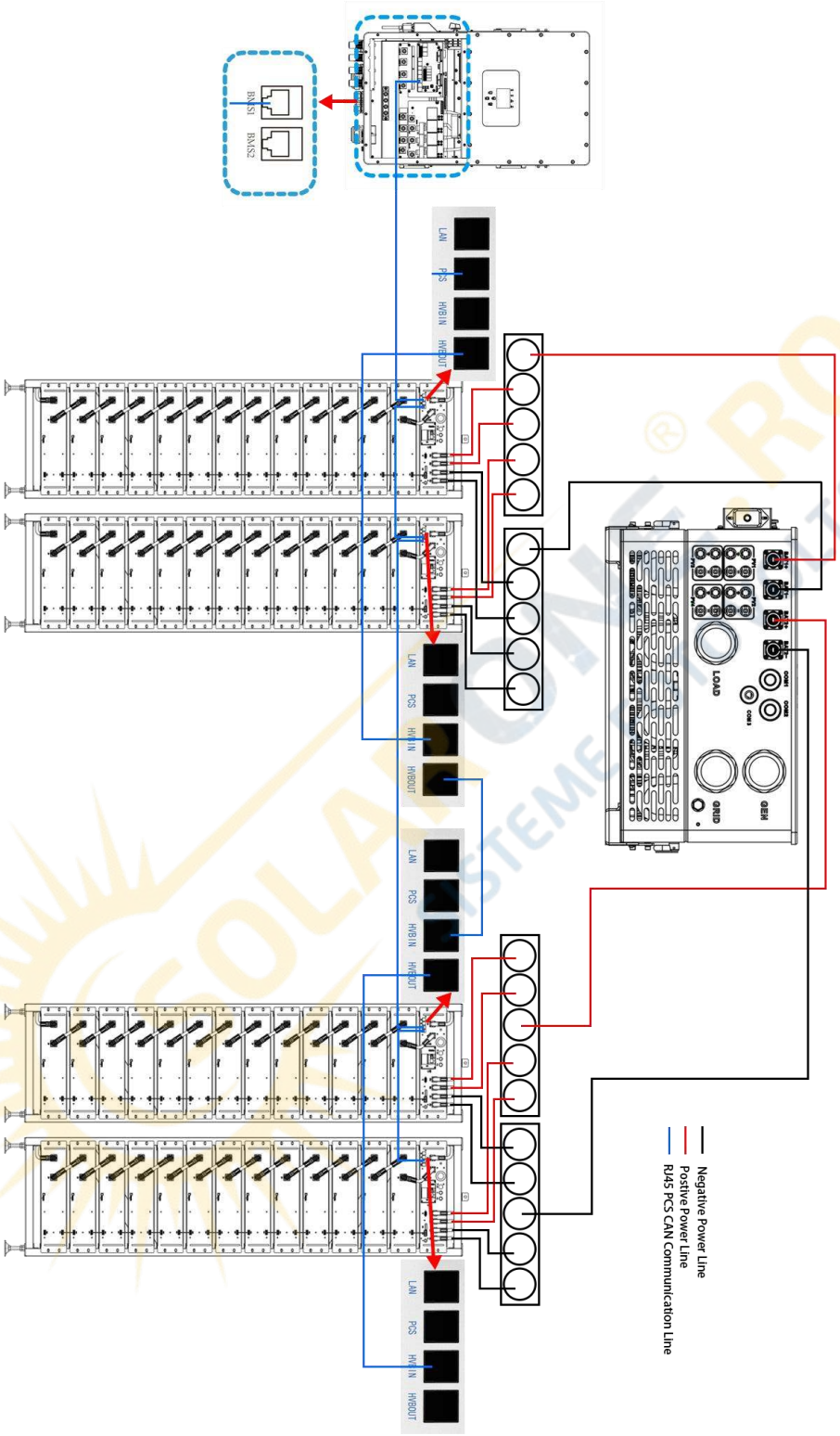

The number of battery packs in each cluster must be the same in each group, and the number of battery packs in group A and Group B can be different.When the power current of a single cluster battery exceeds 100A, two P+ and P- channels must be connected.

4.12 System startup and shutdown

Startup procedure

1) After connecting the battery cables, press the air switch button on the high-voltage control box to turn OFF to ON.
2) Press the start button and wait for the screen to light up.
3) Complete boot

Shutdown procedure

1) Press the start button again and wait for the screen to go off.
2) Press the air switch button ON the high pressure control box and set the "ON" to the "OFF" position.
3) Complete shutdown

Description of external circuit breakers between inverter and battery system

Turn on the circuit breaker and then start the battery pack.

Turn off the circuit breaker after the battery pack is closed.

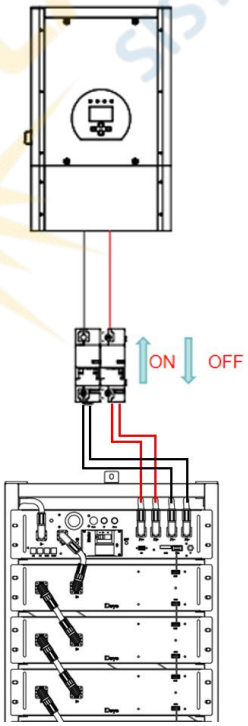

4.14 External 12V Power Supply of High-Voltage Control Box

To operate the high-voltage control box with an external 12V power supply, please contact our service personnel. Hotline: +86 0574 8612 0560, Email: service-ess@deye.com.cn .

In the factory configuration, the high-voltage control box is supplied with working voltage from an internal power supply unit. If your plan requires an external 12V power supply, an adaptive version and a high-voltage control box can be provided as requested. Please contact our after-sales service personnel for details.

SOLARONE.RO® SISTEME FOTOVOLTAICE

5. BOS-A' fault description

Different types of faults are below:

	Fault types	Trigger conditions
System faults	Charge over-current alarm	Exceeding the parameter set value and set time (More than 105A, 2s; more than 125A, 5s; more than 140A, 2s; lower than 5℃, set value*0.5)
	Charge over-current protection	
	Discharge over-current alarm	
	Discharge over-current protection	
	Charge overtemperature alarm	Exceeding the parameter set value and set time (>45℃, 2s)
	Charge overtemperature protection	Exceeding the parameter set value and set time (>50℃, 2s)
	Discharge overtemperature alarm	Exceeding the parameter set value and set time (>50℃, 2s)
	Discharge overtemperature protection	Exceeding the parameter set value and set time (>55℃, 2s)
	Charge under temperature alarm	Exceeding the parameter set value and set time (<5℃, 2s)
	Charge under temperature protection	Exceeding the parameter set value and set time (<0℃, 2s)
	Discharge under temperature alarm	Exceeding the parameter set value and set time (<-10℃, 2s)
	Discharge under temperature protection	Exceeding the parameter set value and set time (<-20 ℃, 2s)
	Excessive differential voltage alarm	Exceeding the parameter set value and set time (>500mv, 2s)
	Excessive differential voltage protection	Exceeding the parameter set value and set time (>800mv, 2s)

	Excessive differential temperature alarm	Exceeding the parameter set value and set time (>10℃, 2s)
	Excessive differential temperature protection	Exceeding the parameter set value and set time (>15℃, 2s)
	Cell overvoltage alarm	To maintain consistency, cut off the charging immediately when the full charge calibration rated voltage of 3.6V is reached. When the voltage drops to 3.35V, restart it with the turned-off red light indicator. All protective red light indicators are always on!
	Cell overvoltage protection	
	Cell undervoltage alarm	
	Cell undervoltage protection	
	Pre-charge resistor overtemperature alarm	Exceeding the parameter set value and set time (>55℃, 2s)
	Pre-charge resistor overtemperature protection	Exceeding the parameter set value and set time (>65℃, 2s)
	Insulation level 1	Exceeding the parameter set value and set time
	Insulation level 2	Exceeding the parameter set value and set time
	Heating film overtemperature alarm	Exceeding the parameter set value and set time (>75℃, 2s)
	Heating film overtemperature protection	Exceeding the parameter set value and set time (>80℃, 2s)
	BMS connector overtemperature alarm	Exceeding the parameter set value and set time
	BMS connector overtemperature protection	Exceeding the parameter set value and set time
	BMU connector overtemperature alarm	Exceeding the parameter set value and set time
	BMU connector overtemperature protection	Exceeding the parameter set value and set time
	Power loop overtemperature	Exceeding the parameter set value and set time

SOLAR ONE.RO SISTEME FOTOVOLTAICE

	alarm	
	Power loop overtemperature protection	Exceeding the parameter set value and set time
	SOC too low	Exceeding the parameter set value and set time
	Total voltage too high alarm	Exceeding the parameter set value and set time
	Total voltage too high protection	Exceeding the parameter set value and set time
	Total voltage too low alarm	Exceeding the parameter set value and set time
	Total voltage too low protection	Exceeding the parameter set value and set time
	Discharge relay adhesion	Relay feedback information state adhesion
	Charge relay adhesion	Relay feedback information state adhesion
	Heating relay adhesion	High voltage is detected after disconnecting the heating relay
	Limit protection	Exceeding the parameter set value and set time
	Abnormal power supply voltage	Exceeding the parameter set value and set time
	Master positive relay adhesion	Relay feedback information state adhesion
	Fuse Blown	No high voltage is detected after the loop relay is closed
	Repeated BMU address fault	BMU with the same number
	INTER-CAN BUS communication failure	Loss of communication between BMS
	PCS-CAN BUS communication failure	The heartbeat message of the inverter is not received for a long time
	RS485 communication failure	Inverter RS485 access is not received for a long time
	Abnormal RS485 communication	C
	External total voltage acquisition fault	/
	Internal total voltage acquisition fault	The difference between the acquired internal total voltage and the accumulated internal total voltage exceeding the set value

	SCHG total voltage acquisition fault	/
	Cell voltage acquisition fault	The cell voltage acquired is 0
	Temperature acquisition failure	The temperature acquired is -40℃
	Current acquisition fault	/
	Current module fault	Abnormal Hall current/reference voltage
	EEPROM storage failure	EEPROM write failure during self-test
	RTC clock fault	The external RTC failed to enable the charging function
	Pre-charge failure	Pre-charge timeout
	Charging voltage too low	The minimum cell voltage is lower than the set value
	BMU lost	BMU message not received for a long time
	Abnormal number of BMU	The number of BMU addresses is different from the number of set parameters

SOLARONE.RO SISTEME FOTOVOLTAICE

6.BOS-A screen displays the logic

1. After startup, the screen is on for 20 seconds and then off. Each time the touch screen is lit behind the scenes for 20 seconds, and then turned off until the next touch.
2. The first 2s of boot, the screen shows all.
3. The fault code starts from F001 in ascending order.
4. Each fault is displayed for 5s, and then switch to the next fault.
5. If all faults are rectified, keep the previous fault on the screen for 5 seconds and clear the screen.

F001	ALARM_ID_SUM_OVER_VOLT_LEV_2	Excessive total pressure
F002	ALARM_ID_SUM_LOW_VOLT_LEV_2	The total pressure is too low
F003	ALARM_ID_CHG_OVER_TEMP_LEV_2	Charging temperature is too high
F004	ALARM_ID_DSG_OVER_TEMP_LEV_2	High discharge temperature
F005	ALARM_ID_CHG_LOW_TEMP_LEV_2	The charging temperature is too low
F006	ALARM_ID_DSG_LOW_TEMP_LEV_2	The discharge temperature is too low. Procedure
F007	ALARM_ID_OVER_DIFF_VOLT_LEV_2	Excessive differential pressure
F008	ALARM_ID_OVER_DIFF_TEMP_LEV_2	excessive temperature differentials
F009	ALARM_ID_CELL_OVER_VOLT_LEV_2	Cell overvoltage
F010	ALARM_ID_CELL_LOW_VOLT_LEV_2	Cell undervoltage
F011	ALARM_ID_PRE_CHG_RES_OVER_TEMP_LEV_2	The temperature of the precharge resistance is too high
F012	ALARM_ID_NORTH_CONNECTOR_OVER_TEMP_LEV_2	The temperature of the BMS connector is too high
F013	ALARM_ID_SOUTH_CONNECTOR_OVER_TEMP_LEV_2	The BMU connector temperature is too high.
F014	ALARM_ID_CHG_OVER_CUR_LEV_2	Charging current fault
F015	ALARM_ID_DSG_OVER_CUR_LEV_2	Discharge current fault
F016	ALARM_ID_SOC_OVER_LEV_2	High SOC fault

F017	ALARM_ID_INSULATION_FAILURE_TWO	Insulation fault
F018	ALARM_ID_HEAT_OVER_TEMP_LEV_2	The heating film is too high
F019	ALARM_ID_SOC_LOW_LEV_2	The SOC is too low
F020	ALARM_ID_DSG_RELAY_ADHESION	The total voltage is too low
F021	ALARM_ID_POS_RELAY_ADHESION	Total positive relay bonding
F022	ALARM_ID_CHG_RELAY_ADHESION	The charging relay is glued
F023	ALARM_ID_HEAT_RELAY_ADHESION	The heating relay is glued
F024	ALARM_ID_ULTIMATE_PROTECTION	Ultimate protection
F025	ALARM_ID_POWER_SUPPLY_FAULT	Abnormal supply voltage
F026	ALARM_ID_FUSE_BLOWN	Blown fuse
F027	ALARM_ID_BMU_ADDR_REPEAT	The BMU repeatedly fails
F028	ALARM_ID_BMS_ADDR_REPEAT	The BMS is faulty repeatedly
F029	ALARM_ID_INTERNAL_COMM_ERROR	The internal CAN communication fails
F030	ALARM_ID_PCS_CAN_COMM_FAIL	The PCS CAN communication fails
F031	MBMS_SAM_SIG_ID_PCS_ERROR_STATE	The PCS RS485 communication fails
F032	ALARM_ID_PCS_RS485_COMM_ERROR	The PCS RS485 communication is abnormal
F033	ALARM_ID_FUSE_VOLT_SAMP_ERROR	The FUSE total pressure collection is abnormal
F034	ALARM_ID_BAT_VOLT_SAMP_ERROR	Abnormal internal total pressure collection
F035	ALARM_ID_MOT_VOLT_SAMP_ERROR	The Mot total pressure collection is abnormal
F036	ALARM_ID_HTP_VOLT_SAMP_ERROR	The heating total pressure collection is abnormal
F037	ALARM_ID_CELL_VOLT_SAMPLE_ERROR	Voltage collection fault
F038	ALARM_ID_TEMP_SAMPLE_ERROR	Temperature acquisition fault
F039	ALARM_ID_CURRENT_SAMPLE_ERROR	Current acquisition fault
F040	ALARM_ID_CURRENT_MODULE	Current module fault

SOLARONE.RO SISTEME FOTOVOLTAICE

	_FAULT	
F041	ALARM_ID_POS_RELAY_DRIVE_FAULT	Total positive relay drive failure
F042	ALARM_ID_CHG_RELAY_DRIVE_FAULT	Charging relay drive failure
F043	ALARM_ID_DSG_RELAY_DRIVE_FAULT	Discharge relay drive failure
F044	ALARM_ID_HEAT_RELAY_DRIVE_FAULT	Heating relay drive failure
F045	ALARM_ID_EEPROM_ERROR	The EEPROM storage is faulty
F046	ALARM_ID_PRECHAGE_ERROR	The precharge failed
F047	ALARM_ID_CHG_VOLT_LOW	The charging voltage is too low
F048	ALARM_ID_BMU_COMM_ERROR	The BMU communication is faulty
F049	ALARM_ID_BMU_NUMBER_ERROR	The number of BMUs is abnormal
F050	ALARM_ID_MBMS_NTC_BREAKLINE_ERROR	Temperature collection of the BMS connector is abnormal
F051	ALARM_ID_BMU_NTC_BREAKLINE_ERROR	The temperature collection of the BMU connector is abnormal
F052	ALARM_ID_PACK_THERMAL_RUNAWAY	PACK thermal runaway fault
F053	ALARM_ID_PACK_FIRE_FAULT	PACK fire failure
F054	ALARM_ID_TCP_CONNECT_FAIL	TCP connection failure
F055	ALARM_ID_W5500_SPI_COMM_FAIL	The W5500SPI communication fails
F056	ALARM_ID_LC_COMM_LOST	LC communication loss
F057	ALARM_ID_PACK_AFE_COMM_ERROR,	BMU AFE communication fails
F058	ALARM_ID_BLE_INIT_FAULT	Description Bluetooth initialization failed
F059	ALARM_ID_CELL_TYPE_MISMATCH_ERROR	The battery type does not match

Note: For more information, please contact us. Email: service-ess@deye.com.cn, Service Hotline: +86 0574 8612 0560.

7. Maintenance and upgrade

Warning! Improper decommissioning may cause damage to the equipment and/or battery inverter.

Before maintenance, ensure that BOS-A is decommissioned according to relevant provisions.

Note: All maintenance work shall comply with local applicable regulations and standards.

The USB disk port of BOS-A has the functions of upgrading firmware and recording battery data, which can be used as an auxiliary tool.

7.1 Maintenance of BOS-A

To ensure safe operation, all plug connections must be checked. If necessary, relevant operators shall press them back into place at least once a year.

The following inspection or maintenance must be carried out once a year:

• General visual inspection

• Check all tightened electrical connections. Check the tightening torque according to the values in the following table. Loose connections must be retightened to the specified torque.

Connection mode	Tightening torque
High-voltage control box grounding	4.5Nm
Fixing the lug of the high-voltage control box	1.2Nm
Fixing the lug of the battery module	1.2Nm

• Using the monitoring software, check whether the SoC, SoH, battery voltage and temperature of the battery module are abnormal.

• Shut down and restart BOS-A once a year.

Note: If the system is installed in a polluted environment, maintenance and cleaning must be carried out at short intervals.

Note: Clean the battery rack with a dry-cleaning cloth. Ensure that no moisture comes into contact with the battery connections. Do not use solvents.

7.2 USB's Upgrade Step

1. USB type: USB2.0, FAT32.
2. Create the upgrade folder according to the directory.
3. Place the upgrade file provided by the supplier in the upgrade folder.
4. Turn on the battery, and insert the USB flash disk after the blue indicator is on.
5. After the blue light indicator flashes and turns off, pull out the USB flash disk to complete the upgrade. Do not turn off the battery during the process.
6. After the blue light indicator of the battery lights up again, check the version number through the screen or app and verify the upgrade result.

SOLARONE.RO® SISTEME FOTOVOLTAICE

8. Battery Module Storage

A. To ensure the battery service life, the storage temperature shall be kept between 0°C~35°C.

B. The battery shall be cycled at least once every 6 months.

C. To minimize self-discharge in a long storage period, disconnect the battery connection (1/2) of the high-voltage control box of the DC connecting cable. This will interrupt the use of the 12 V power supply installed in the high-voltage control box and prevent the battery from self-discharging.

9. Disposal

For details related to the disposal of battery modules, please contact us. Service Hotline: +86 0574 8612 0560, Email: service-ess@deye.com.cn. For more information, please visit http://deyeess.com.

Observe applicable regulations on waste battery disposal. Immediately stop the use of damaged batteries. Please contact your installer or sales partner before disposal. Ensure that the battery is not exposed to moisture or direct sunlight.

Attention:

1. Do not dispose of batteries and rechargeable batteries as domestic waste!

You are legally obliged to return used batteries and rechargeable batteries.

2. Waste batteries may contain pollutants that can damage the environment or your health if improperly stored or handled.

3. Batteries also contain iron, lithium and other important raw materials, which can be recycled.

For more information, please visit http://www.deyeess.com. Do not dispose of batteries as household waste!

10. Legal notice

Installation and Operation Manual for BOS-A

Last revision: 09/2022

Subject to technical changes.

Deye ESS Technology Co., Ltd

China

Legal Statement

The information contained in the document is the property of Deye ESS Technology Co., Ltd. D

All information shall not be published in whole or in part without the written permission of Deye ESS Technology Co., Lt.