SUN2000-(75KTL, 100KTL, 110KTL, 125KTL) Series

User Manual

Issue	17
Date	2023-04-30

SOLARONE.RO
SISTEME FOTOVOLTAICE

HUAWEI TECHNOLOGIES CO., LTD.

Copyright © Huawei Technologies Co., Ltd. 2023. All rights reserved.

No part of this document may be reproduced or transmitted in any form or by any means without prior written consent of Huawei Technologies Co., Ltd.

Trademarks and Permissions

HUAWEI and other Huawei trademarks are trademarks of Huawei Technologies Co., Ltd.
All other trademarks and trade names mentioned in this document are the property of their respective holders.

Notice

The purchased products, services and features are stipulated by the contract made between Huawei and the customer. All or part of the products, services and features described in this document may not be within the purchase scope or the usage scope. Unless otherwise specified in the contract, all statements, information, and recommendations in this document are provided "AS IS" without warranties, guarantees or representations of any kind, either express or implied.

The information in this document is subject to change without notice. Every effort has been made in the preparation of this document to ensure accuracy of the contents, but all statements, information, and recommendations in this document do not constitute a warranty of any kind, express or implied.

Huawei Technologies Co., Ltd.

Address: Huawei Industrial Base
Bantian, Longgang
Shenzhen 518129
People's Republic of China

Website: https://e.huawei.com

About This Document

Overview

This document describes the SUN2000-125KTL-M0, SUN2000-110KTL-M0, SUN2000-100KTL-M0, SUN2000-100KTL-M1, SUN2000-100KTL-INM0, and SUN2000-75KTL-M1 (also referred to as SUN2000) in terms of installation, electrical connection, commissioning, maintenance, and troubleshooting. Before installing and operating the solar inverter, ensure that you are familiar with the features, functions, and safety precautions provided in this document.

Intended Audience

This document is intended for photovoltaic (PV) plant operating personnel and qualified electricians.

Symbol Conventions

The symbols that may be found in this document are defined as follows.

Symbol	Description
DANGER	Indicates a hazard with a high level of risk which, if not avoided, will result in death or serious injury.
WARNING	Indicates a hazard with a medium level of risk which, if not avoided, could result in death or serious injury.
CAUTION	Indicates a hazard with a low level of risk which, if not avoided, could result in minor or moderate injury.
NOTICE	Indicates a potentially hazardous situation which, if not avoided, could result in equipment damage, data loss, performance deterioration, or unanticipated results. NOTICE is used to address practices not related to personal injury.

Copyright © Huawei Technologies Co., Ltd.

Symbol	Description
NOTE	Supplements the important information in the main text. NOTE is used to address information not related to personal injury, equipment damage, and environment deterioration.

Change History

Changes between document issues are cumulative. The latest document issue contains all the changes made in earlier issues.

Issue 17 (2023-04-30)

Updated **5.7.1 Cable Connection Description**.

Updated **5.9 (Optional) Installing a Smart Dongle**.

Issue 16 (2023-03-28)

Updated **5.2 Preparing Cables**.

Updated **5.7.1 Cable Connection Description**.

Issue 15 (2023-01-31)

Updated **1 Safety Information**.

Updated **4.2 Tools**.

Updated **4.5 Installing a Solar Inverter**.

Updated **5.6 Connecting an AC Output Power Cable**.

Updated **5.7 Connecting DC Input Power Cables**.

Updated **6.2 Powering On the SUN2000**.

Updated **7.1.2 Downloading and Installing the App**.

Updated **8 Maintenance**.

Updated **8.4 Troubleshooting**.

Added **B Resetting Password**.

Added **D Contact Information**.

Issue 14 (2022-09-30)

Updated **5.2 Preparing Cables**.

Updated **5.6 Connecting an AC Output Power Cable**.

Updated **7.1.3 Logging In to the App**.

Deleted Operations with a USB Flash Drive.

Updated **8.4 Troubleshooting**.

Updated **A Grid Codes**.

Added **B Resetting Password**.

Issue 13 (2022-06-20)

Updated **5.7 Connecting DC Input Power Cables**.

Updated **8.4 Troubleshooting**.

Updated **10 Technical Specifications**.

Issue 12 (2022-03-20)

Updated **2.3 Label Description**.

Updated **2.4.1 Appearance**.

Updated **4.3 Determining the Installation Position**.

Updated **6.1 Check Before Power-on**.

Updated **6.2 Powering On the SUN2000**.

Updated **8.3 Routine Maintenance**.

Updated **8.6 Resetting and Turning On the DC Switch**.

Updated **A Grid Codes**.

Issue 11 (2021-11-10)

Added the SUN2000-75KTL-M1 model.

Updated **About This Document**.

Updated **2.1 Product Model**.

Updated **2.4.1 Appearance**.

Updated **4.5 Installing a Solar Inverter**.

Updated **5.2 Preparing Cables**.

Updated **5.3 Connecting the PE Cable**.

Updated **5.6 Connecting an AC Output Power Cable**.

Updated **6.2 Powering On the SUN2000**.

Updated **10 Technical Specifications**.

Updated **A Grid Codes**.

Issue 10 (2021-09-28)

Updated **2.3 Label Description**.

Updated **2.4.1 Appearance**.

Updated **4.5 Installing a Solar Inverter**.

Updated **5.2 Preparing Cables**.

Updated **5.7 Connecting DC Input Power Cables**.

Updated **6.2 Powering On the SUN2000**.

Updated **7.1.4.5 AFCI**.

Updated **8.1 Shutdown and Power-Off**.

Updated **8.2 Power-Off for Troubleshooting**.

Updated **8.3 Routine Maintenance**.

Updated **8.6 Resetting and Turning On the DC Switch**.

Issue 09 (2021-07-08)

Updated **5.7 Connecting DC Input Power Cables**.

Updated **6.2 Powering On the SUN2000**.

Issue 08 (2021-03-10)

Updated **5.7 Connecting DC Input Power Cables**.

Updated **8.4 Troubleshooting**.

Updated **A Grid Codes**.

Issue 07 (2020-09-15)

Updated **2.2 Overview**.

Updated **2.4.1 Appearance**.

Updated **6.2 Powering On the SUN2000**.

Updated **7.1 Operations with the SUN2000 App**.

Updated **8.3 Routine Maintenance**.

Updated **8.4 Troubleshooting**.

Issue 06 (2020-08-10)

Updated **4.3 Determining the Installation Position**.

Issue 05 (2020-03-30)

Updated **2.4.2 Indicator Status**.

Updated **10 Technical Specifications**.

Issue 04 (2020-02-07)

Updated **5.7 Connecting DC Input Power Cables**.

Issue 03 (2019-12-08)

Updated **3 Solar Inverter Storage**.

Updated **4.5 Installing a Solar Inverter**.

Updated **5.2 Preparing Cables**.

Updated **5.6 Connecting an AC Output Power Cable**.

Updated **5.7 Connecting DC Input Power Cables**.

Updated **5.8 Connecting the RS485 Communications Cables**.

Updated **7.1.1 App Introduction**.

Added **8.2 Power-Off for Troubleshooting**.

Updated **10 Technical Specifications**.

Updated **A Grid Codes**.

Added **C Domain Name List of Management Systems**.

Issue 02 (2019-08-09)

Added the SUN2000-110KTL-M0, SUN2000-100KTL-M0, SUN2000-100KTL-M1, and SUN2000-100KTL-INM0 models.

Issue 01 (2019-05-15)

This issue is used for first office application (FOA).

Contents

About This Document ii

1 Safety Information 1

1.1 Personal Safety 2
1.2 Electrical Safety 4
1.3 Environment Requirements 6
1.4 Mechanical Safety 8

2 Overview 13

2.1 Product Model 13
2.2 Overview 16
2.3 Label Description 17
2.4 Product Appearance 19
2.4.1 Appearance 19
2.4.2 Indicator Status 23
2.5 Working Principles 25
2.5.1 Circuit Diagram 26
2.5.2 Working Modes 27

3 Solar Inverter Storage 29

4 Installation 31

4.1 Check Before Installation 31
4.2 Tools 32
4.3 Determining the Installation Position 34
4.4 Installing the Mounting Bracket 38
4.4.1 Support-mounted Installation 39
4.4.2 Wall-mounted Installation 40
4.5 Installing a Solar Inverter 41

5 Electrical Connections 48

5.1 Precautions 48
5.2 Preparing Cables 48
5.3 Connecting the PE Cable 58
5.4 Opening the Maintenance Compartment Door 59
5.5 (Optional) Installing the Power Cable of the Tracking System 62

5.6 Connecting an AC Output Power Cable....63
5.7 Connecting DC Input Power Cables....70
5.7.1 Cable Connection Description....71
5.7.2 Connecting Cables to Amphenol Helios H4 Connectors....73
5.7.3 Connecting Cables to Staubli MC4 Connectors....76
5.8 Connecting the RS485 Communications Cables....80
5.9 (Optional) Installing a Smart Dongle....82

6 Commissioning....86
6.1 Check Before Power-on....86
6.2 Powering On the SUN2000....87

7 Man-Machine Interactions....89
7.1 Operations with the SUN2000 App....89
7.1.1 App Introduction....89
7.1.2 Downloading and Installing the App....90
7.1.3 Logging In to the App....91
7.1.4 Operations Related to the Advanced User....98
7.1.4.1 Setting Grid Parameters....98
7.1.4.2 Setting Protection Parameters....99
7.1.4.3 Setting Feature Parameters....99
7.1.4.4 Built-in PID Recovery....103
7.1.4.5 AFCI....105
7.1.5 Operations Related to the Special User....106
7.1.5.1 Setting Grid Parameters....106
7.1.5.2 Setting Protection Parameters....108
7.1.5.3 Setting Feature Parameters....110
7.1.5.4 Setting Power Adjustment Parameters....114
7.2 Upgrading the Inverter....119

8 Maintenance....120
8.1 Shutdown and Power-Off....120
8.2 Power-Off for Troubleshooting....121
8.3 Routine Maintenance....123
8.4 Troubleshooting....125
8.5 Replacing a Fan....138
8.6 Resetting and Turning On the DC Switch....142

9 Handling the Inverter....144
9.1 Removing the SUN2000....144
9.2 Packing the SUN2000....144
9.3 Disposing of the SUN2000....144

10 Technical Specifications....145

A Grid Codes....150

B Resetting Password..... 161

C Domain Name List of Management Systems.....162

D Contact Information..... 163

E Acronyms and Abbreviations.....165

SOLARONE.RO SISTEME FOTOVOLTAICE

1 Safety Information

Statement

Before transporting, storing, installing, operating, using, and/or maintaining the equipment, read this document, strictly follow the instructions provided herein, and follow all the safety instructions on the equipment and in this document. In this document, "equipment" refers to the products, software, components, spare parts, and/or services related to this document; "the Company" refers to the manufacturer (producer), seller, and/or service provider of the equipment; "you" refers to the entity that transports, stores, installs, operates, uses, and/or maintains the equipment.

The **Danger**, **Warning**, **Caution**, and **Notice** statements described in this document do not cover all the safety precautions. You also need to comply with relevant international, national, or regional standards and industry practices. **The Company shall not be liable for any consequences that may arise due to violations of safety requirements or safety standards concerning the design, production, and usage of the equipment.**

The equipment should be used in an environment that meets the design specifications. Otherwise, the equipment may be faulty, malfunctioning, or damaged, which is not covered under the warranty. The Company shall not be liable for any property loss, personal injury, or even death caused thereby.

Comply with applicable laws, regulations, standards, and specifications during transportation, storage, installation, operation, use, and maintenance.

Do not perform reverse engineering, decompilation, disassembly, adaptation, implantation, or other derivative operations on the equipment software. Do not study the internal implementation logic of the equipment, obtain the source code of the equipment software, violate intellectual property rights, or disclose any of the performance test results of the equipment software.

The Company shall not be liable for any of the following circumstances or their consequences:

- The equipment is damaged due to force majeure such as earthquakes, floods, volcanic eruptions, debris flows, lightning strikes, fires, wars, armed conflicts, typhoons, hurricanes, tornadoes, and other extreme weather conditions.
- The equipment is operated beyond the conditions specified in this document.

 Copyright © Huawei Technologies Co., Ltd.

- The equipment is installed or used in environments that do not comply with international, national, or regional standards.
- The equipment is installed or used by unqualified personnel.
- You fail to follow the operation instructions and safety precautions on the product and in the document.
- You remove or modify the product or modify the software code without authorization.
- You or a third party authorized by you cause the equipment damage during transportation.
- The equipment is damaged due to storage conditions that do not meet the requirements specified in the product document.
- You fail to prepare materials and tools that comply with local laws, regulations, and related standards.
- The equipment is damaged due to your or a third party's negligence, intentional breach, gross negligence, or improper operations, or other reasons not related to the Company.

1.1 Personal Safety

DANGER

Ensure that power is off during installation. Do not install or remove a cable with power on. Transient contact between the core of the cable and the conductor will generate electric arcs or sparks, which may cause a fire or personal injury.

DANGER

Non-standard and improper operations on the energized equipment may cause fire, electric shocks, or explosion, resulting in property damage, personal injury, or even death.

DANGER

Before operations, remove conductive objects such as watches, bracelets, bangles, rings, and necklaces to prevent electric shocks.

DANGER

During operations, use dedicated insulated tools to prevent electric shocks or short circuits. The dielectric withstanding voltage level must comply with local laws, regulations, standards, and specifications.

 Copyright © Huawei Technologies Co., Ltd.

WARNING

During operations, wear personal protective equipment such as protective clothing, insulated shoes, goggles, safety helmets, and insulated gloves.

Figure 1-1 Personal protective equipment

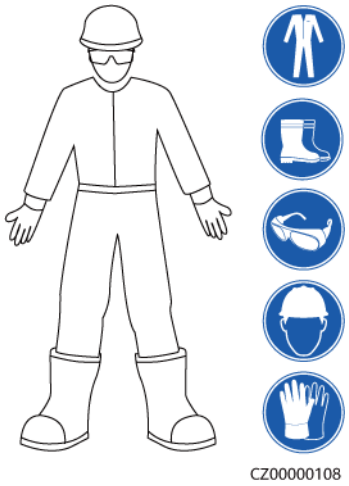

General Requirements

- Do not stop protective devices. Pay attention to the warnings, cautions, and related precautionary measures in this document and on the equipment.
- If there is a likelihood of personal injury or equipment damage during operations, immediately stop, report the case to the supervisor, and take feasible protective measures.
- Do not power on the equipment before it is installed or confirmed by professionals.
- Do not touch the power supply equipment directly or with conductors such as damp objects. Before touching any conductor surface or terminal, measure the voltage at the contact point to ensure that there is no risk of electric shock.
- Do not touch operating equipment because the enclosure is hot.
- Do not touch a running fan with your hands, components, screws, tools, or boards. Otherwise, personal injury or equipment damage may occur.
- In the case of a fire, immediately leave the building or the equipment area and activate the fire alarm or call emergency services. Do not enter the affected building or equipment area under any circumstances.

Personnel Requirements

- Only professionals and trained personnel are allowed to operate the equipment.
  - Professionals: personnel who are familiar with the working principles and structure of the equipment, trained or experienced in equipment operations and are clear of the sources and degree of various potential hazards in equipment installation, operation, maintenance

 Copyright © Huawei Technologies Co., Ltd.

  - Trained personnel: personnel who are trained in technology and safety, have required experience, are aware of possible hazards on themselves in certain operations, and are able to take protective measures to minimize the hazards on themselves and other people
- Personnel who plan to install or maintain the equipment must receive adequate training, be able to correctly perform all operations, and understand all necessary safety precautions and local relevant standards.
- Only qualified professionals or trained personnel are allowed to install, operate, and maintain the equipment.
- Only qualified professionals are allowed to remove safety facilities and inspect the equipment.
- Personnel who will perform special tasks such as electrical operations, working at heights, and operations of special equipment must possess the required local qualifications.
- Only authorized professionals are allowed to replace the equipment or components (including software).
- Only personnel who need to work on the equipment are allowed to access the equipment.

1.2 Electrical Safety

DANGER

Before connecting cables, ensure that the equipment is intact. Otherwise, electric shocks or fire may occur.

DANGER

Non-standard and improper operations may result in fire or electric shocks.

DANGER

Prevent foreign matter from entering the equipment during operations. Otherwise, equipment damage, load power derating, power failure, or personal injury may occur.

WARNING

For the equipment that needs to be grounded, install the ground cable first when installing the equipment and remove the ground cable last when removing the equipment.

 Copyright © Huawei Technologies Co., Ltd.

CAUTION

Do not route cables near the air intake or exhaust vents of the equipment.

General Requirements

- Follow the procedures described in the document for installation, operation, and maintenance. Do not reconstruct or alter the equipment, add components, or change the installation sequence without permission.
- Obtain approval from the national or local electric utility company before connecting the equipment to the grid.
- Observe the power plant safety regulations, such as the operation and work ticket mechanisms.
- Install temporary fences or warning ropes and hang "No Entry" signs around the operation area to keep unauthorized personnel away from the area.
- Before installing or removing power cables, turn off the switches of the equipment and its upstream and downstream switches.
- Before performing operations on the equipment, check that all tools meet the requirements and record the tools. After the operations are complete, collect all of the tools to prevent them from being left inside the equipment.
- Before installing power cables, check that cable labels are correct and cable terminals are insulated.
- When installing the equipment, use a torque tool of a proper measurement range to tighten the screws. When using a wrench to tighten the screws, ensure that the wrench does not tilt and the torque error does not exceed 10% of the specified value.
- Ensure that bolts are tightened with a torque tool and marked in red and blue after double-check. Installation personnel mark tightened bolts in blue. Quality inspection personnel confirm that the bolts are tightened and then mark them in red. (The marks should cross the edges of the bolts.)

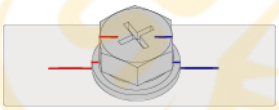

- If the equipment has multiple inputs, disconnect all the inputs before operating the equipment.
- Before maintaining a downstream electrical or power distribution device, turn off the output switch on the power supply equipment.
- During equipment maintenance, attach "Do not switch on" labels near the upstream and downstream switches or circuit breakers as well as warning signs to prevent accidental connection. The equipment can be powered on only after troubleshooting is complete.
- Do not open equipment panels.
- Check equipment connections periodically, ensuring that all screws are securely tightened.
- Only qualified professionals can replace a damaged cable.
- Do not scrawl, damage, or block any labels or nameplates on the equipment. Promptly replace labels that have worn out.

- Do not use solvents such as water, alcohol, or oil to clean electrical components inside or outside of the equipment.

Grounding

- Ensure that the grounding impedance of the equipment complies with local electrical standards.
- Ensure that the equipment is connected permanently to the protective ground. Before operating the equipment, check its electrical connection to ensure that it is reliably grounded.
- Do not work on the equipment in the absence of a properly installed ground conductor.
- Do not damage the ground conductor.

Cabling Requirements

- When selecting, installing, and routing cables, follow local safety regulations and rules.
- When routing power cables, ensure that there is no coiling or twisting. Do not join or weld power cables. If necessary, use a longer cable.
- Ensure that all cables are properly connected and insulated, and meet specifications.
- Ensure that the slots and holes for routing cables are free from sharp edges, and that the positions where cables are routed through pipes or cable holes are equipped with cushion materials to prevent the cables from being damaged by sharp edges or burrs.
- Ensure that cables of the same type are bound together neatly and straight and that the cable sheath is intact. When routing cables of different types, ensure that they are away from each other without entanglement and overlapping.
- Secure buried cables using cable supports and cable clips. Ensure that the cables in the backfill area are in close contact with the ground to prevent cable deformation or damage during backfilling.
- If the external conditions (such as the cable layout or ambient temperature) change, verify the cable usage in accordance with the IEC-60364-5-52 or local laws and regulations. For example, check that the current-carrying capacity meets requirements.
- When routing cables, reserve at least 30 mm clearance between the cables and heat-generating components or areas. This prevents deterioration or damage to the cable insulation layer.

1.3 Environment Requirements

DANGER

Do not expose the equipment to flammable or explosive gas or smoke. Do not perform any operation on the equipment in such environments.

 Copyright © Huawei Technologies Co., Ltd.

DANGER

Do not store any flammable or explosive materials in the equipment area.

DANGER

Do not place the equipment near heat sources or fire sources, such as smoke, candles, heaters, or other heating devices. Overheat may damage the equipment or cause a fire.

WARNING

Install the equipment in an area far away from liquids. Do not install it under areas prone to condensation, such as under water pipes and air exhaust vents, or areas prone to water leakage, such as air conditioner vents, ventilation vents, or feeder windows of the equipment room. Ensure that no liquid enters the equipment to prevent faults or short circuits.

WARNING

To prevent damage or fire due to high temperature, ensure that the ventilation vents or heat dissipation systems are not obstructed or covered by other objects while the equipment is running.

General Requirements

- Ensure that the equipment is stored in a clean, dry, and well ventilated area with proper temperature and humidity and is protected from dust and condensation.
- Keep the installation and operating environments of the equipment within the allowed ranges. Otherwise, its performance and safety will be compromised.
- Do not install, use, or operate outdoor equipment and cables (including but not limited to moving equipment, operating equipment and cables, inserting connectors to or removing connectors from signal ports connected to outdoor facilities, working at heights, performing outdoor installation, and opening doors) in harsh weather conditions such as lightning, rain, snow, and level 6 or stronger wind.
- Do not install the equipment in an environment with dust, smoke, volatile or corrosive gases, infrared and other radiations, organic solvents, or salty air.
- Do not install the equipment in an environment with conductive metal or magnetic dust.
- Do not install the equipment in an area conducive to the growth of microorganisms such as fungus or mildew.
- Do not install the equipment in an area with strong vibration, noise, or electromagnetic interference.

 Copyright © Huawei Technologies Co., Ltd.

- Ensure that the site complies with local laws, regulations, and related standards.
- Ensure that the ground in the installation environment is solid, free from spongy or soft soil, and not prone to subsidence. The site must not be located in a low-lying land prone to water or snow accumulation, and the horizontal level of the site must be above the highest water level of that area in history.
- Do not install the equipment in a position that may be submerged in water.
- If the equipment is installed in a place with abundant vegetation, in addition to routine weeding, harden the ground underneath the equipment using cement or gravel (recommended area: 3 m x 2.5 m).
- Do not install the equipment outdoors in salt-affected areas because it may be corroded. A salt-affected area refers to the region within 500 m of the coast or prone to sea breeze. Regions prone to sea breeze vary with weather conditions (such as typhoons and monsoons) or terrains (such as dams and hills).
- Before opening doors during the installation, operation, and maintenance of the equipment, clean up any water, ice, snow, or other foreign objects on the top of the equipment to prevent foreign objects from falling into the equipment.
- When installing the equipment, ensure that the installation surface is solid enough to bear the weight of the equipment.
- After installing the equipment, remove the packing materials such as cartons, foam, plastics, and cable ties from the equipment area.

1.4 Mechanical Safety

WARNING

Ensure that all necessary tools are ready and inspected by a professional organization. Do not use tools that have signs of scratches or fail to pass the inspection or whose inspection validity period has expired. Ensure that the tools are secure and not overloaded.

WARNING

Do not drill holes into the equipment. Doing so may affect the sealing performance and electromagnetic containment of the equipment and damage components or cables inside. Metal shavings from drilling may short-circuit boards inside the equipment.

General Requirements

- Repaint any paint scratches caused during equipment transportation or installation in a timely manner. Equipment with scratches cannot be exposed for an extended period of time.
- Do not perform operations such as arc welding and cutting on the equipment without evaluation by the Company.

 Copyright © Huawei Technologies Co., Ltd.

- Do not install other devices on the top of the equipment without evaluation by the Company.
- When performing operations over the top of the equipment, take measures to protect the equipment against damage.
- Use correct tools and operate them in the correct way.

Moving Heavy Objects

- Be cautious to prevent injury when moving heavy objects.

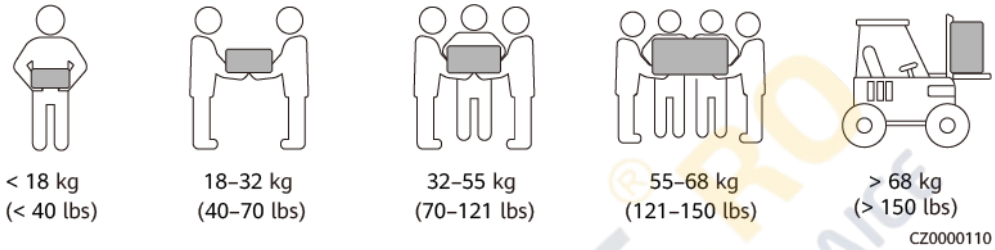

- If multiple persons need to move a heavy object together, determine the manpower and work division with consideration of height and other conditions to ensure that the weight is equally distributed.
- If two persons or more move a heavy object together, ensure that the object is lifted and landed simultaneously and moved at a uniform pace under the supervision of one person.
- Wear personal protective gears such as protective gloves and shoes when manually moving the equipment.
- To move an object by hand, approach to the object, squat down, and then lift the object gently and stably by the force of the legs instead of your back. Do not lift it suddenly or turn your body around.
- Do not quickly lift a heavy object above your waist. Place the object on a workbench that is half-waist high or any other appropriate place, adjust the positions of your palms, and then lift it.
- Move a heavy object stably with balanced force at an even and low speed. Put down the object stably and slowly to prevent any collision or drop from scratching the surface of the equipment or damaging the components and cables.
- When moving a heavy object, be aware of the workbench, slope, staircase, and slippery places. When moving a heavy object through a door, ensure that the door is wide enough to move the object and avoid bumping or injury.
- When transferring a heavy object, move your feet instead of turning your waist around. When lifting and transferring a heavy object, ensure that your feet point to the target direction of movement.
- When transporting the equipment using a pallet truck or forklift, ensure that the tynes are properly positioned so that the equipment does not topple. Before moving the equipment, secure it to the pallet truck or forklift using ropes. When moving the equipment, assign dedicated personnel to take care of it.
- Choose sea or roads in good conditions for transportation as transportation by railway or air is not supported. Avoid tilt or jolt during transportation.

Using Ladders

- Use wooden or insulated ladders when you need to perform live-line working at heights.
- Platform ladders with protective rails are preferred. Single ladders are not recommended.
- Before using a ladder, check that it is intact and confirm its load bearing capacity. Do not overload it.
- Ensure that the ladder is securely positioned and held firm.

CZ00000107

- When climbing up the ladder, keep your body stable and your center of gravity between the side rails, and do not overreach to the sides.
- When a step ladder is used, ensure that the pull ropes are secured.
- If a single ladder is used, the recommended angle for the ladder against the floor is 75 degrees, as shown in the following figure. A square can be used to measure the angle.

PI02SC0008

- If a single ladder is used, ensure that the wider end of the ladder is at the bottom, and take protective measures to prevent the ladder from sliding.
- If a single ladder is used, do not climb higher than the fourth rung of the ladder from the top.
- If you use a single ladder to climb up to a platform, ensure that the ladder is at least 1 m higher than the platform.

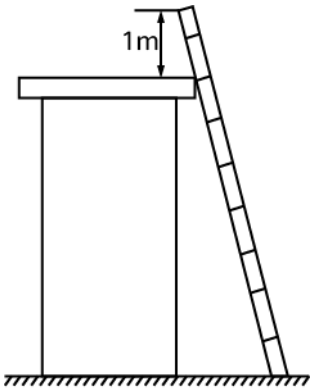

PI02SC0009

Hoisting

- Only trained and qualified personnel are allowed to perform hoisting operations.
- Install temporary warning signs or fences to isolate the hoisting area.
- Ensure that the foundation where hoisting is performed on meets the load-bearing requirements.
- Before hoisting objects, ensure that hoisting tools are firmly secured onto a fixed object or wall that meets the load-bearing requirements.
- During hoisting, do not stand or walk under the crane or the hoisted objects.
- Do not drag steel ropes and hoisting tools or bump the hoisted objects against hard objects during hoisting.
- Ensure that the angle between two hoisting ropes is no more than 90 degrees, as shown in the following figure.

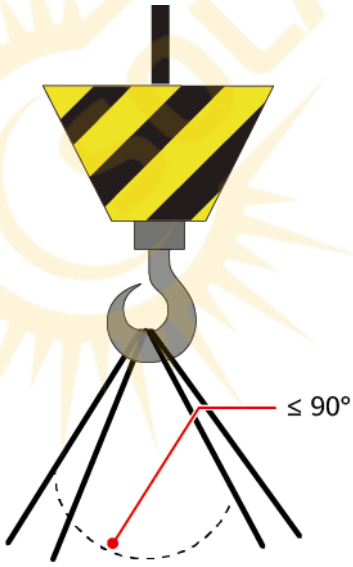

CZ00000106

Drilling Holes

- Obtain consent from the customer and contractor before drilling holes.
- Wear protective equipment such as safety goggles and protective gloves when drilling holes.

- To avoid short circuits or other risks, do not drill holes into buried pipes or cables.
- When drilling holes, protect the equipment from shavings. After drilling, clean up any shavings.

SOLARONE.RO® SISTEME FOTOVOLTAICE

2 Overview

2.1 Product Model

Model Description

NOTICE

The SUN2000-125KTL-M0, SUN2000-110KTL-M0, and SUN2000-100KTL-M0 are applicable only to the Chinese mainland. For other countries or regions, Huawei does not provide quality assurance.

This document covers the following product models:

- SUN2000-125KTL-M0
- SUN2000-110KTL-M0
- SUN2000-100KTL-M0
- SUN2000-100KTL-M1
- SUN2000-100KTL-INM0
- SUN2000-75KTL-M1

Figure 2-1 Model

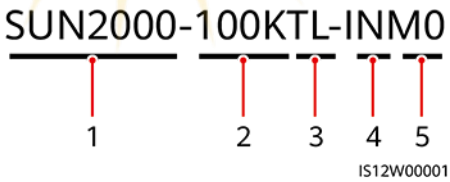

Table 2-1 Model description

No.	Description	Value
1	Product family	SUN2000: grid-tied solar inverter
2	Power	• 125K: The power level is 125 kW. • 110K: The power level is 110 kW. • 100K: The power level is 100 kW. • 75K: The power level is 75 kW.
3	Topology	TL: transformerless
4	Region	IN: India
5	Design code	M0 and M1: product series with an input voltage level of 1100 V DC1

Model Identification

You can obtain the solar inverter model from the model label on the external package and the nameplate on the side of the enclosure.

Figure 2-2 Position of the model label on the external package

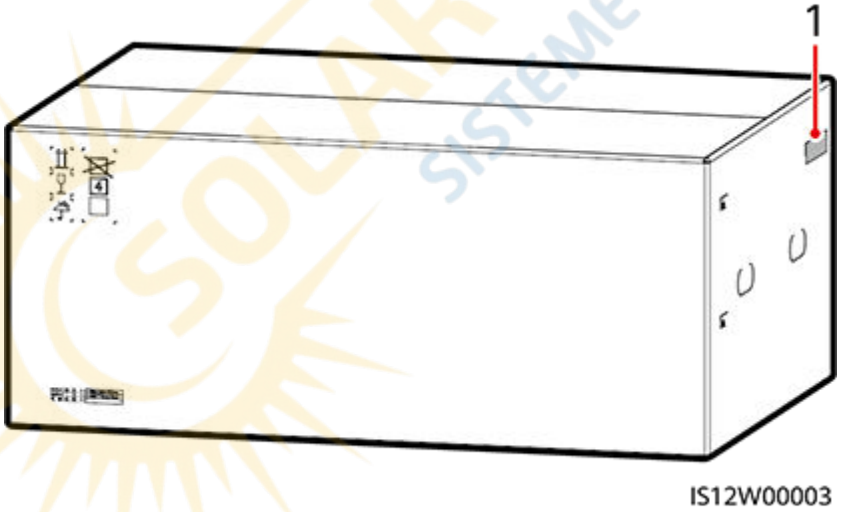

(1) Position of the model label

Figure 2-3 Nameplate

(1) Trademark and product model

(2) Key technical specifications

(3) Compliance symbols

(4) Company name and country of origin

NOTE

The nameplate figure is for reference only.

2.2 Overview

Description

SUN2000 solar inverters are grid-tied PV string inverters that convert the DC power generated by PV strings into AC power and feed the power into the power grid.

Characteristics

Smart

- Ten independent maximum power point tracking (MPPT) circuits and 20 PV string inputs. Flexible configuration of PV strings is supported.
- Smart PV module self-learning: Automatically detects PV module failures, helping rectify faults. Optimizes the working mode to obtain the optimal working mode of the system.
- Smart air cooling: Adjusts the fan speed based on the ambient temperature and load to ensure the service life of fans and avoid frequent maintenance.
- MBUS networking: Uses the existing power line for communication and does not require additional communications cable, which reduces the construction and maintenance costs and improves communication reliability and efficiency.
- Smart I-V curve diagnosis: Implements I-V scanning and health diagnosis for PV strings. In this way, potential risks and faults can be detected in time, improving the plant operation & maintenance (O&M) quality.

Safe

- Embedded DC and AC surge protection devices (SPDs): all-dimensional surge protection
- Embedded residual current monitoring unit: Immediately disconnects from the power grid upon detecting that the residual current exceeds the threshold.

Networking

SUN2000 solar inverters apply to grid-tied systems of large-scale PV plants and commercial distributed grid-tied systems. Typically, a grid-tied PV system consists of the PV string, solar inverter, AC combiner box, and transformer station.

Figure 2-4 Networking

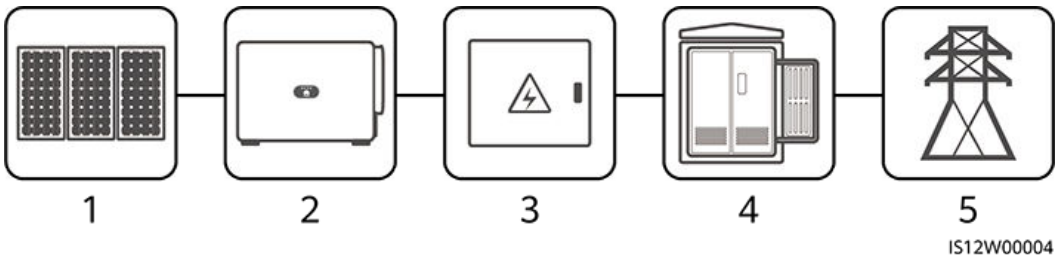

(1) PV string (2) SUN2000 (3) AC combiner box

(4) Transformer station	(5) Power grid	-

NOTE

- Connect the SUN2000-125KTL-M0 to a dedicated power transformer instead of a low-voltage overhead power cable.
- In a non-low-voltage grid-connected scenario, the SUN2000-100KTL-M1, SUN2000-100KTL-INM0, and SUN2000-75KTL-M1 need to connect to an isolation transformer and avoid overhead cabling.

Supported Power Grids

- SUN2000-110KTL-M0, SUN2000-100KTL-M0, SUN2000-100KTL-M1, SUN2000-100KTL-INM0, and SUN2000-75KTL-M1 solar inverters support the TN-S, TN-C, TN-C-S, TT, and IT power grids.
- The SUN2000-125KTL-M0 supports only the IT power grid.

Figure 2-5 Supported power grids

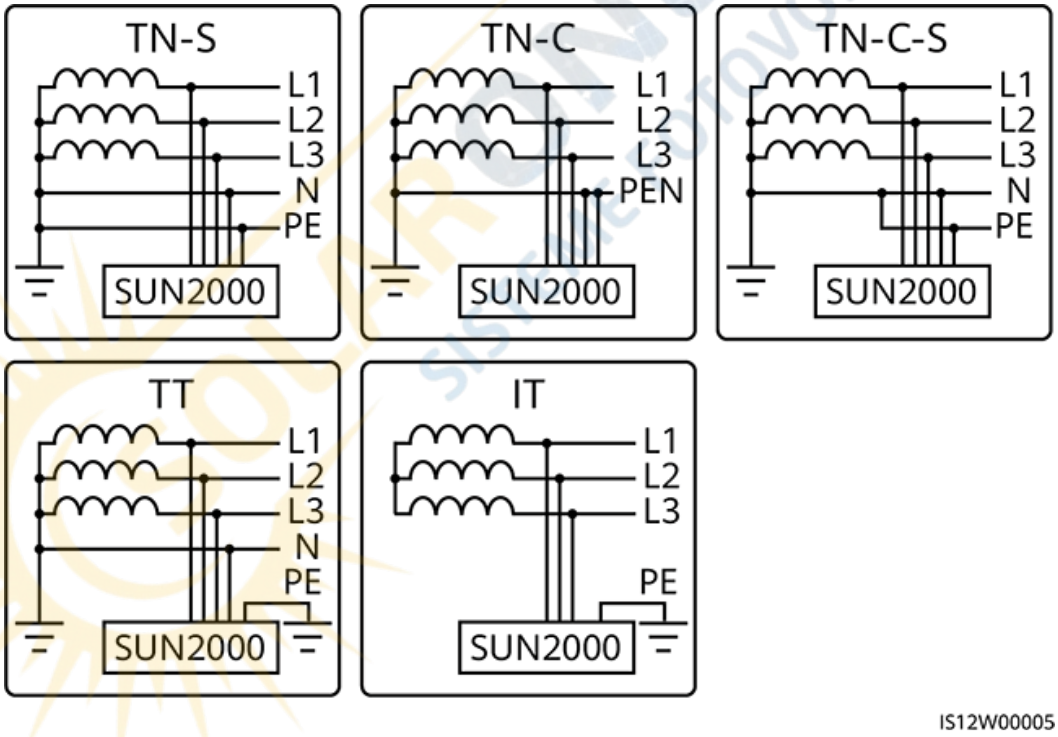

2.3 Label Description

Symbol	Name	Meaning
	Running warning	Potential hazards exist after the inverter is powered on. Take protective measures when operating the inverter.

Symbol	Name	Meaning
	Burn warning	Do not touch a running inverter, as the shell becomes hot during operation.
	Large current warning	Before powering on the inverter, ensure that the inverter is grounded because there is a large contact current after the inverter is powered on.
	Delayed discharge	• High voltage exists after the inverter is powered on. Only qualified and trained electrical technicians are allowed to perform operations on the inverter. • Residual voltage exists after the inverter is powered off. It takes 15 minutes for the inverter to discharge to the safe voltage.
	Refer to documentation	Reminds operators to refer to the documents shipped with the inverter.
	Grounding	Indicates the position for connecting the protective earthing (PE) cable.
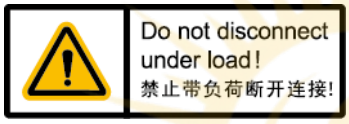	Operation warning	Do not remove the DC input connector when the inverter is running.
	Switching operation warning	The DC switch may fail to switch off automatically when it is not completely closed.
	Switch unloaded warning	This position indicates that the DC switch is in unloaded state. Do not set the DC switch to this position.
	Fan operation warning	High voltage exists after the inverter is powered on. Do not touch the fans when the inverter is working.
	Fan replacement warning	Before replacing a fan, disconnect its power connectors.

Symbol	Name	Meaning
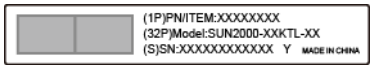	Inverter ESN label	Indicates the inverter serial number.
	Weight label	The inverter needs to be carried by four persons or using a pallet truck.

2.4 Product Appearance

2.4.1 Appearance

Front View

Figure 2-6 Front view

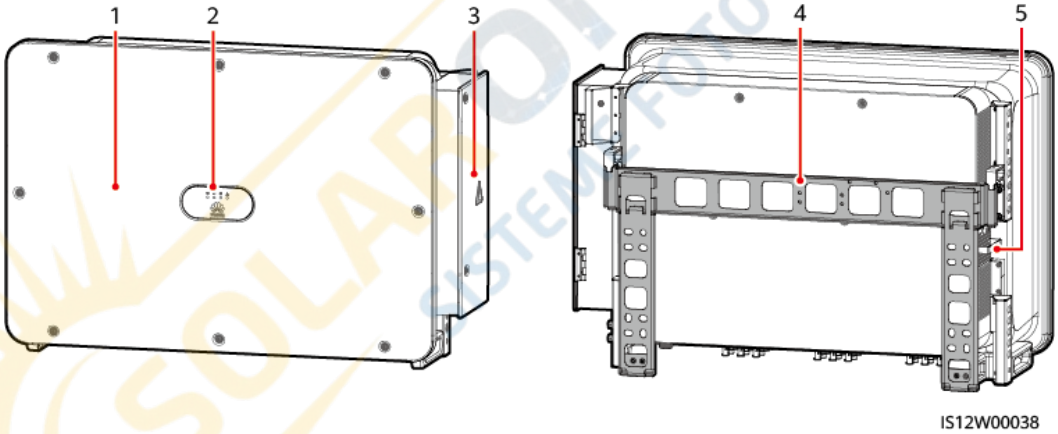

(1) Panel

(2) LED indicators

(3) Maintenance compartment door

(4) Mounting bracket

(5) External fan tray

-

Bottom View

NOTE

- The DC switch of the current model can be manual or automatic.
- According to Australian standards, the screws for DC switches are delivered with SUN2000s. The screws are used to secure DC switches (DC SWITCH 1, DC SWITCH 2, and DC SWITCH 3) to prevent them from being turned on by mistake.

 Copyright © Huawei Technologies Co., Ltd.

Figure 2-7 Port description (manual DC switch)

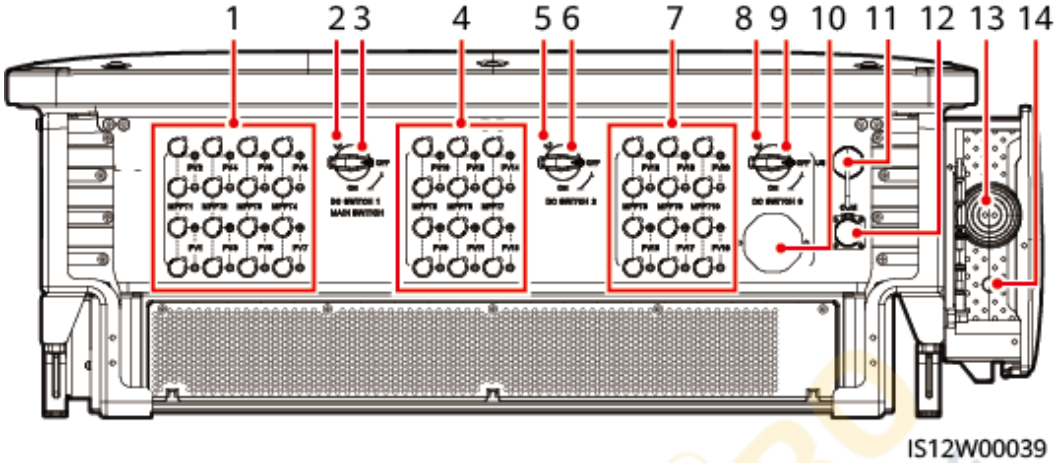

(1) DC input terminal group 1 (PV1–PV8, controlled by DC SWITCH 1)

(2) (Optional) Screw hole for DC switch 1

(3) DC switch 1 (DC SWITCH 1)

(4) DC input terminal group 2 (PV9–PV14, controlled by DC SWITCH 2)

(5) (Optional) Screw hole for DC switch 2

(6) DC switch 2 (DC SWITCH 2)

(7) DC input terminal group 3 (PV15–PV20, controlled by DC SWITCH 3)

(8) (Optional) Screw hole for DC switch 3

(9) DC switch 3 (DC SWITCH 3)

(10) Ventilation valve

(11) USB port

(12) Communications port (COM)

(13) Hole for the AC output power cable

(14) Hole for the tracking system power cable

Figure 2-8 Port description (automatic DC switch)

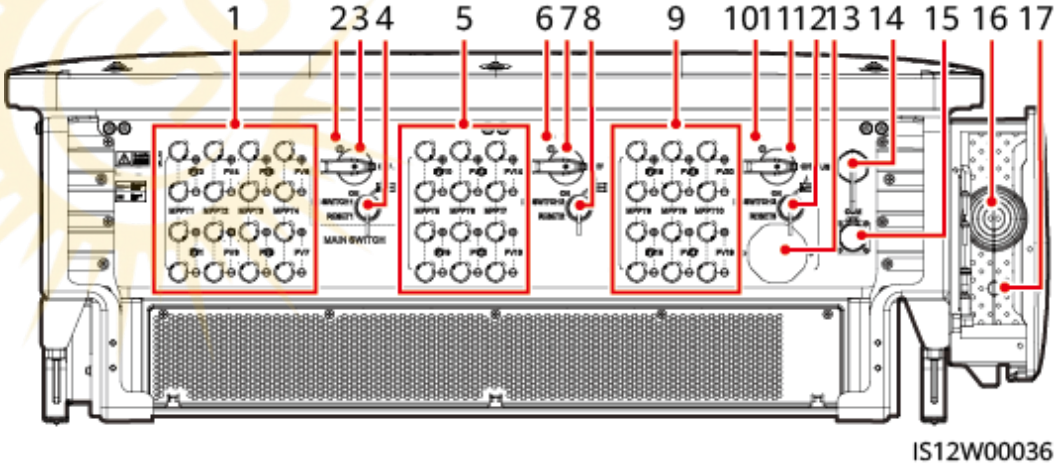

(1) DC input terminal group 1 (PV1–PV8, controlled by DC SWITCH 1)

(2) (Optional) Screw hole for DC switch 1

(3) DC switch 1 (DC SWITCH 1)

(4) Reset button 1 (RESET 1)

(5) DC input terminal group 2 (PV9–PV14, controlled by DC SWITCH 2)

(6) (Optional) Screw hole for DC switch 2

(7) DC switch 2 (DC SWITCH 2)	(8) Reset button 2 (RESET 2)
(9) DC input terminal group 3 (PV15–PV20, controlled by DC SWITCH 3)	(10) (Optional) Screw hole for DC switch 3
(11) DC switch 3 (DC SWITCH 3)	(12) Reset button 3 (RESET 3)
(13) Ventilation valve	(14) USB port
(15) Communications port (COM)	(16) Hole for the AC output power cable
(17) Hole for the tracking system power cable	-

DC Switch Description

DANGER

The DC switches automatically turn off when a fault occurs in the inverters (LED4 is steady red, and the three DC switches are OFF). In this case, contact your technical support. Do not turn on the DC switches by yourself.

Table 2-2 DC switch description

Switch Component	Description	
DC SWITCH	ON	The DC switch is ON and can automatically turn off for protection.
		The DC switch is ON but cannot automatically turn off for protection.
	OFF	The DC switch is OFF.
RESET	• When the DC switch automatically turns off for protection, the RESET button will be released. • When the RESET button is not pressed, the DC switch can only be turned to the unloaded position, and cannot be set to the ON position.	

Dimensions

Figure 2-9 Dimensions

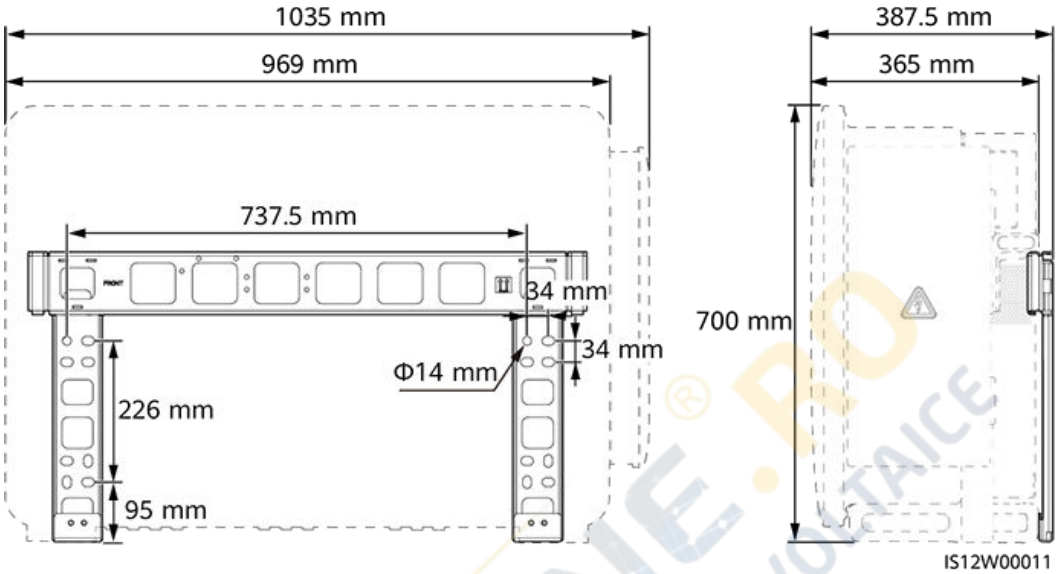

Wiring Area

Figure 2-10 Wiring port of a 3-pin model (SUN2000-125KTL-M0)

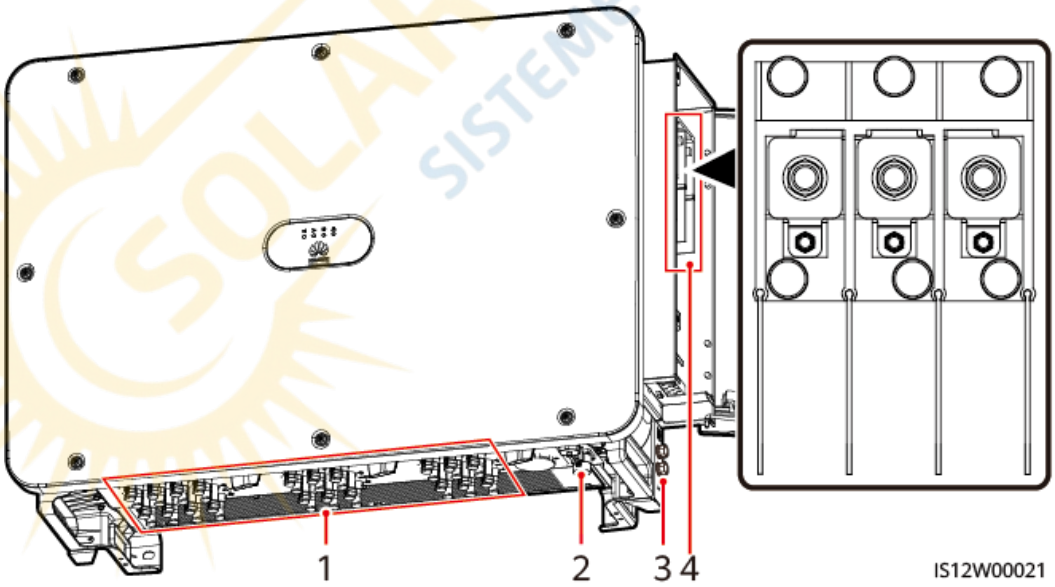

(1) DC input terminals

(2) RS485 port

(3) Ground point on the enclosure

(4) AC terminal block (3-pin)

Figure 2-11 Wiring port of 4-pin models (SUN2000-110KTL-M0, SUN2000-100KTL-M0, SUN2000-100KTL-M1, SUN2000-100KTL-INM0 and SUN2000-75KTL-M1)

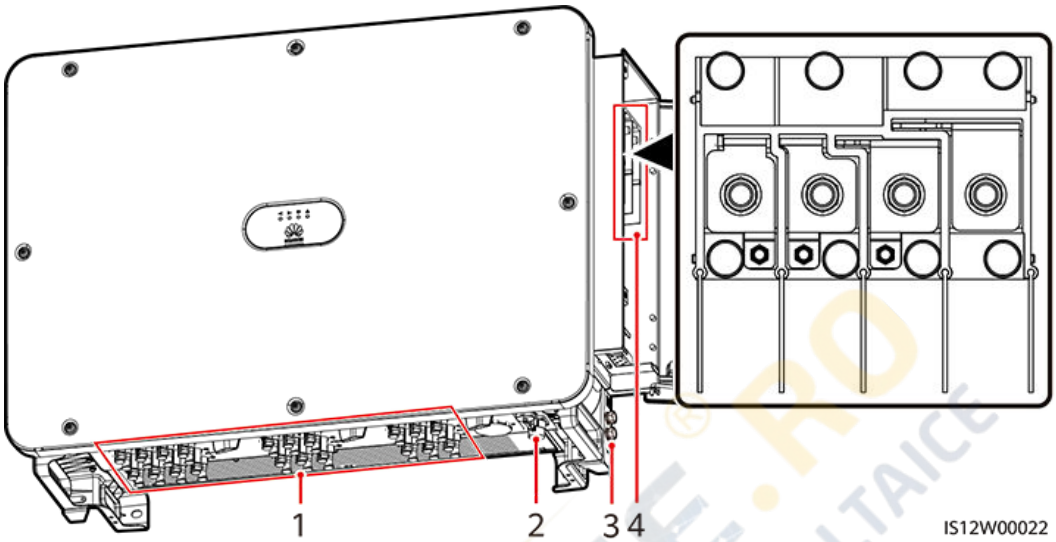

(1) DC input terminals
(2) RS485 port
(3) Ground point on the enclosure
(4) AC terminal block (4-pin)

2.4.2 Indicator Status

Figure 2-12 Indicator

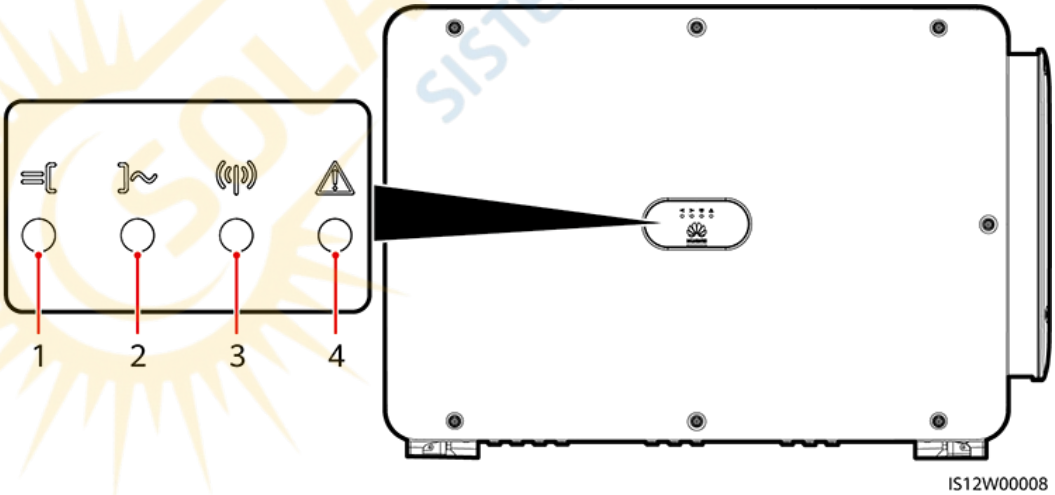

No.	Indicator	Status (Blinking Fast: On for 0.2s and then Off for 0.2s; Blinking Slowly: On for 1s and then Off for 1s)	Description
1	PV connection indicator	Steady green	At least one PV string is properly connected, and the DC input voltage of the corresponding MPPT circuit is at least 200 V.
		Blinking green fast	If the alarm/maintenance indicator is red, an environmental fault at the DC side of the solar inverter is generated.
		Off	The solar inverter disconnects from all PV strings, or the DC input voltage of all MPPT circuits is less than 200 V.
2	Grid connection indicator	Steady green	The solar inverter is in grid-tied mode.
		Blinking green fast	If the alarm/maintenance indicator is red, an environmental fault at the AC side of the solar inverter is generated.
		Off	The solar inverter is not in grid-tied mode.
3	Communications indicator	Blinking green fast	The solar inverter receives communication data normally.
		Off	The solar inverter has not received communication data for 10 seconds.

 Copyright © Huawei Technologies Co., Ltd.

No.	Indicator	Status (Blinking Fast: On for 0.2s and then Off for 0.2s; Blinking Slowly: On for 1s and then Off for 1s)		Description
4	Alarm/ Maintenance indicator	Alarm status	Steady red	A major alarm is generated. ● If the PV connection indicator or grid connection indicator is blinking green fast, troubleshoot DC or AC environmental faults as instructed by the SUN2000 app. ● If the PV connection indicator and grid connection indicator are both not blinking green fast, replace components or the solar inverter as instructed by the SUN2000 app.
			Blinking red fast	A minor alarm is generated.
			Blinking red slowly	A warning alarm is generated.
		Local maintenance status	Steady green	Local maintenance succeeds.
			Blinking green fast	Local maintenance fails.
			Blinking green slowly	In local maintenance or shuts down over a command.

NOTE

- The PV connection indicator and the grid connection indicator preferentially indicate environmental faults.
- Local maintenance refers to operations performed after a USB flash drive, a WLAN module, a Bluetooth module, or a USB data cable is inserted into the USB port of the solar inverter. For example, local maintenance includes data import and export using a USB flash drive, and connecting to the SUN2000 app over a WLAN module, a Bluetooth module, or a USB data cable.
- If an alarm is generated during local maintenance, the alarm/maintenance indicator shows the local maintenance state first. After the USB flash drive, WLAN module, Bluetooth module, or USB data cable is removed, the indicator shows the alarm state.

2.5 Working Principles

 Copyright © Huawei Technologies Co., Ltd.

2.5.1 Circuit Diagram

The solar inverter receives inputs from 20 PV strings. The inputs are grouped into 10 MPPT circuits inside the solar inverter to track the maximum power point of the PV strings. The DC power is then converted into three-phase AC power through an inverter circuit. Surge protection is supported on both the DC and AC sides.

Figure 2-13 Schematic diagram of a 3-pin model

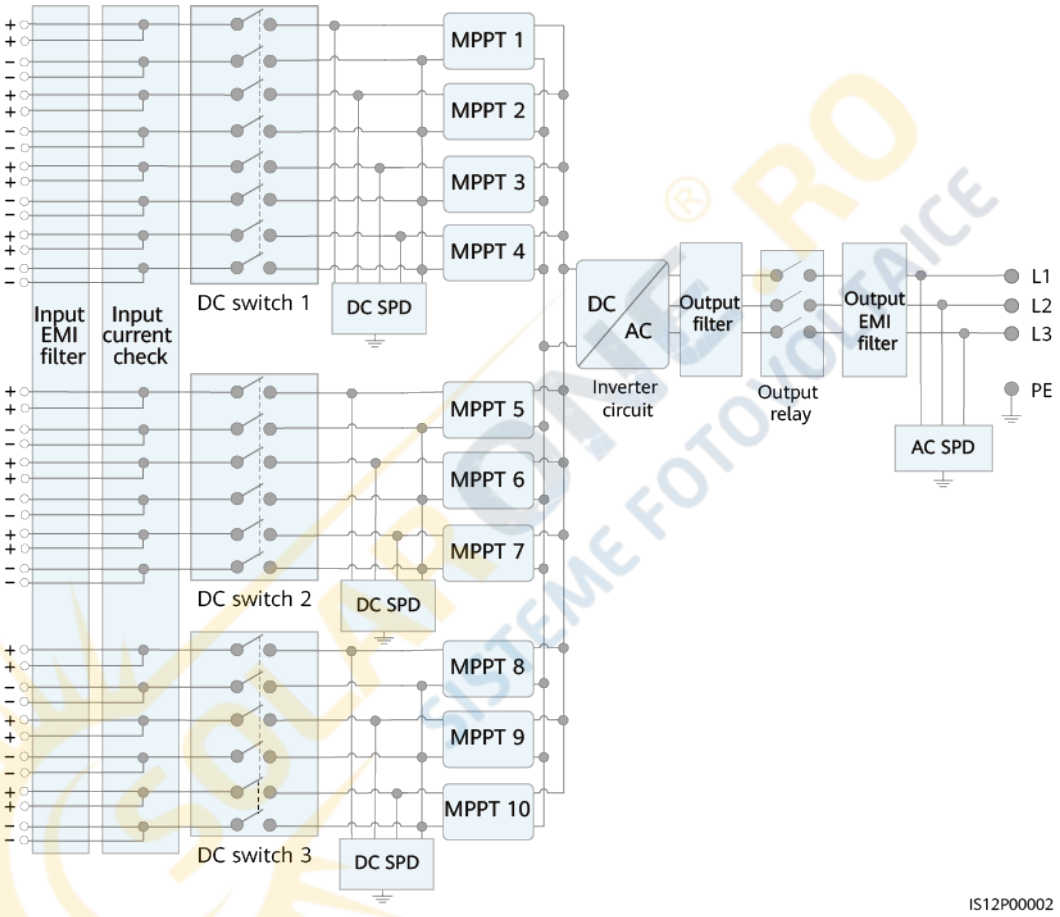

Figure 2-14 Schematic diagram of 4-pin models

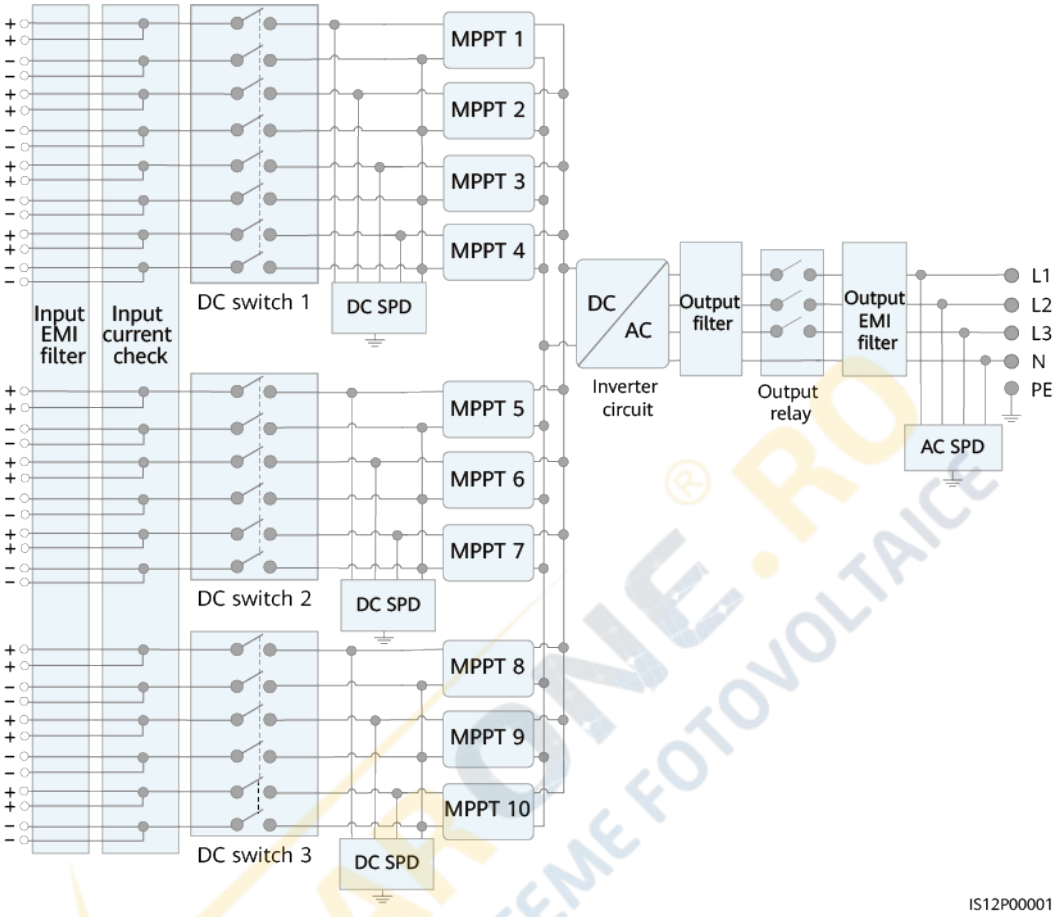

2.5.2 Working Modes

The SUN2000 can work in Standby, Operating, or Shutdown mode.

Figure 2-15 Working modes

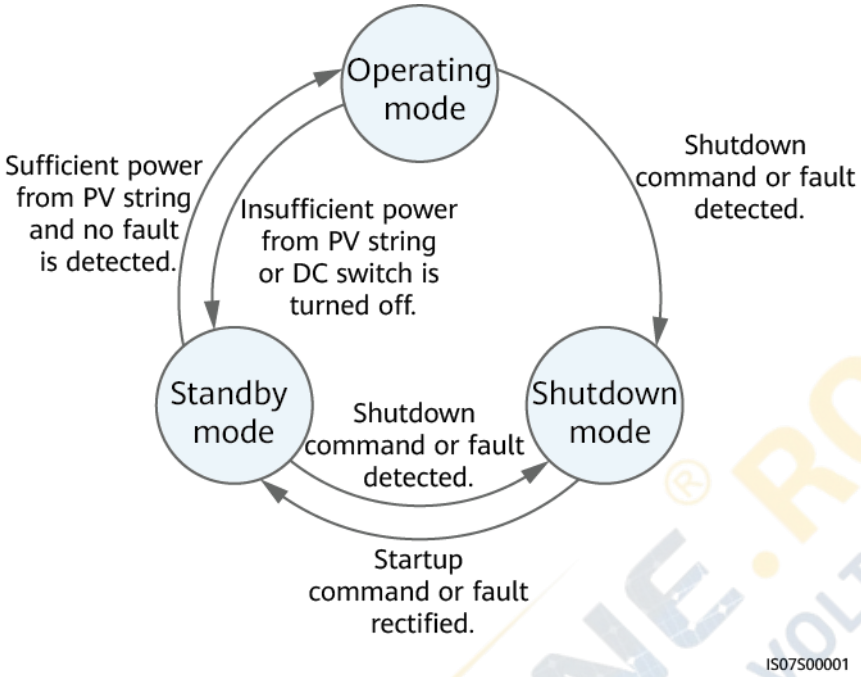

Table 2-3 Working mode description

Working Mode	Description
Standby	The SUN2000 enters Standby mode when the external environment does not meet the operating requirements. In Standby mode: ● The SUN2000 continuously performs status check and enters the Operating mode once the operating requirements are met. ● The SUN2000 enters Shutdown mode after detecting a shutdown command or a fault after startup.
Operating	In Operating mode: ● The SUN2000 converts DC power from PV strings into AC power and feeds the power to the power grid. ● The SUN2000 tracks the maximum power point to maximize the PV string output. ● If the SUN2000 detects a fault or a shutdown command, it enters the Shutdown mode. ● The SUN2000 enters Standby mode after detecting that the PV string output power is not suitable for connecting to the power grid for generating power.
Shutdown	● In Standby or Operating mode, the SUN2000 enters Shutdown mode after detecting a fault or shutdown command. ● In Shutdown mode, the SUN2000 enters Standby mode after detecting a startup command or that the fault is rectified.

3 Solar Inverter Storage

The following requirements should be met if the solar inverter is not put into use immediately:

- Do not remove the packing materials, and check the packing materials regularly (recommended: every three months). If any rodent bites are found, replace the packing materials immediately. If the solar inverter is unpacked but not put into use immediately, put it inside the original package with the desiccant bag, and seal it using tape.
- The ambient temperature and humidity should be suitable for the storage. The air must not contain corrosive or flammable gases.

Figure 3-1 Storage temperature and humidity

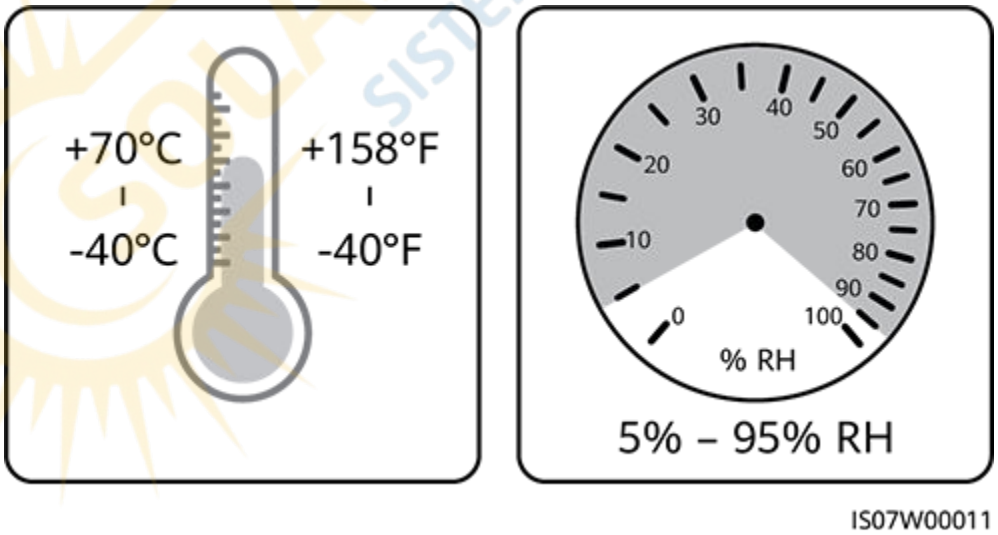

- The solar inverter should be stored in a clean and dry place and be protected from dust and water vapor corrosion. The solar inverter must be protected against rain and water.
- Do not tilt the package or place it upside down.
- To avoid personal injury or device damage, stack inverters with caution to prevent them from falling over.

Figure 3-2 Maximum number of pile-up layers allowed

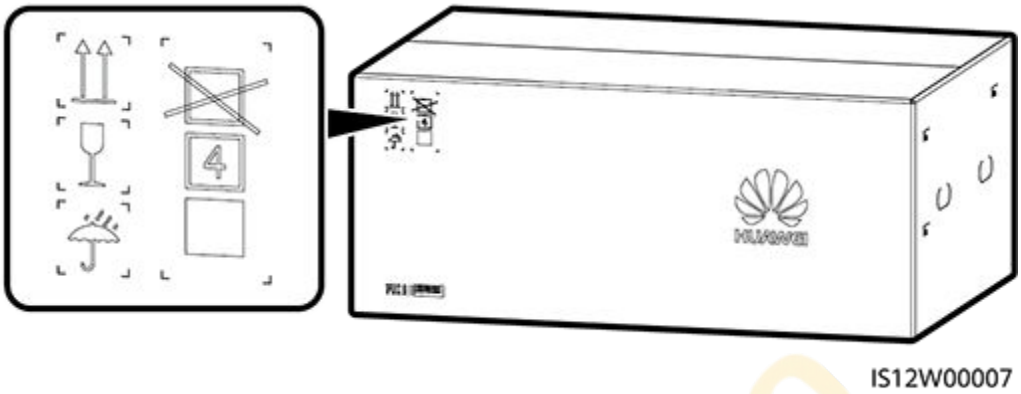

- If the solar inverter has been stored for more than two years, it must be checked and tested by professionals before being put into use.

SOLARONE.RO SISTEME FOTOVOLTAICE

4 Installation

4.1 Check Before Installation

Checking Outer Packing Materials

Before unpacking the solar inverter, check the outer packing materials for damage, such as holes and cracks, and check the solar inverter model. If any damage is found or the solar inverter model is not what you requested, do not unpack the package and contact your supplier as soon as possible.

NOTE

You are advised to remove the packing materials within 24 hours before installing the solar inverter.

Checking Accessories

After unpacking the solar inverter, check that the components are intact and complete. If any damage is found or any component is missing, contact your dealer.

NOTE

For details about the number of accessories delivered with the solar inverter, see the *Packing List* in the packing case.

 Copyright © Huawei Technologies Co., Ltd.

4.2 Tools

Category	Tool			
Installation tools	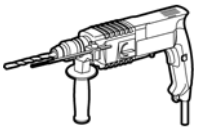 Hammer drill	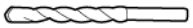 Drill bit (Φ14 mm and Φ16 mm)	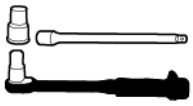 Insulated torque socket wrench (including an extension bar ≥ 50 mm)	Phillips insulated torque screwdriver
	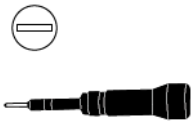 Flat-head insulated torque screwdriver	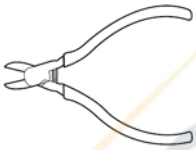 Diagonal pliers	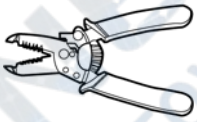 Wire strippers	Rubber mallet
	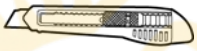 Utility knife	Cable cutter	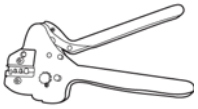 Crimping tool Model: H4TC0003 Manufacturer: AMPHENOL (For Amphenol Helios H4 connectors only)	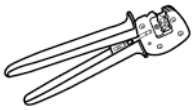 Crimping tool Model: PV-CZM-22100 Manufacturer: Staubli (For Staubli MC4 connectors only)

Category	Tool			
	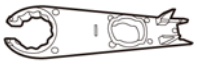 Open-end wrench Model: H4TW0001 Manufacturer: AMPHENOL (For Amphenol Helios H4 connectors only)	Open-end wrench Model: PV-MS-HZ Manufacturer: Staubli (For Staubli MC4 connectors only)	Multimeter (DC voltage measurement range ≥ 1100 V DC)	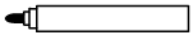 Marker
	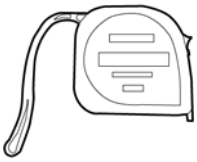 Measuring tape	Level	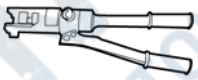 Hydraulic pliers	Heat shrink tubing
	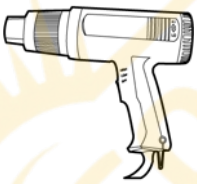 Heat gun	Cable tie	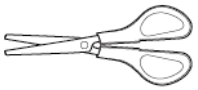 Scissors	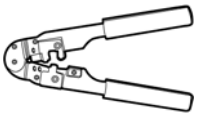 RJ45 crimping tool
	Vacuum cleaner	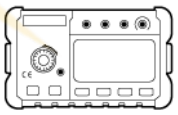 Insulation resistance tester (Output voltage > 1500 V)	-	-

SOLARONE.RO® SISTEME FOTOVOLTAICE

Category	Tool			
Personal protective equipment (PPE)	Insulated gloves	Safety goggles	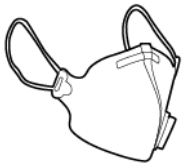 Dust mask	Work shoes
	Safety helmet	Reflective vest	Protective gloves	-

4.3 Determining the Installation Position

Installation Environment Requirements

- Do not install the inverter in working or living areas.
- If the device is installed in public places (such as parking lots, stations, and factories) other than working and living areas, install a protective net outside the device, set up a safety warning sign to isolate the device, and prevent unauthorized personnel from approaching the inverter. This is to avoid personal injury or property loss caused by accidental contact or other reasons during device operation.
- If inverters are installed in a place with abundant vegetation, in addition to routine weeding, harden the ground underneath the inverters using cement or gravel (recommended area: 3 m x 2.5 m).
- Do not install the inverter in areas with flammable materials.
- Do not install the inverter in areas with explosive materials.
- Do not install the inverter in areas with corrosive materials.
- Do not install the inverter where its enclosure and heat sinks are easily accessible, because the voltage is high and these parts are hot during operation.
- Install the inverter in a well-ventilated environment for heat dissipation
- If the inverter is installed in an airtight environment, a heat dissipation device or ventilation device must be installed to ensure that the indoor ambient temperature is not higher than the external ambient temperature during operation.
- You are advised to install the inverter in a sheltered place or install an awning over it.
- The inverter will be corroded in salt areas. Before installing the inverter outdoors in salt areas, consult Huawei. A salt area refers to the region within

500 meters from the coast or prone to sea breeze. The regions prone to sea breeze vary with weather conditions (such as typhoons and monsoons) or terrains (such as dams and hills).

NOTE

The SUN2000-125KTL-M0 should be physically separated from third-party wireless communication facilities and residential environments by distance greater than 30 m.

Mounting Structure Requirements

- The mounting structure where the solar inverter is installed must be fire resistant. Do not install the solar inverter on flammable building materials.
- Ensure that the installation surface is solid enough to bear the solar inverter.
- In residential areas, do not install the solar inverter on drywalls or walls made of similar materials with a weak sound insulation performance because the noise generated by the solar inverter may interfere with residents.

Figure 4-1 Mounting structure

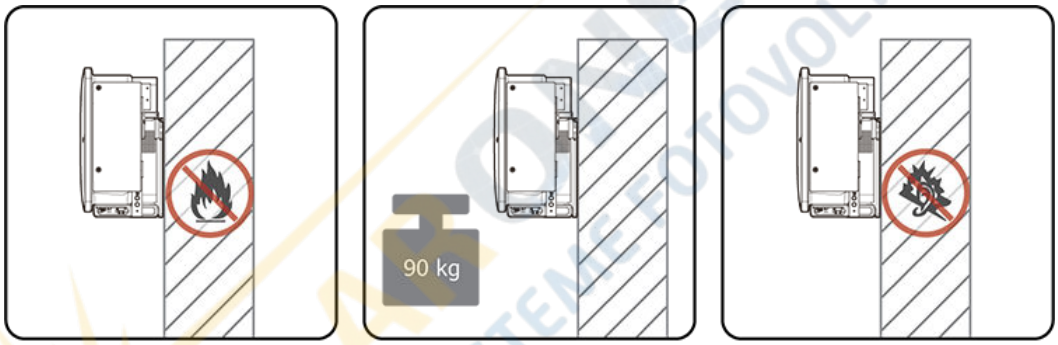

IS12H00004

Installation Angle Requirements

The solar inverter can be support-mounted or wall-mounted. The installation angle requirements are as follows:

- Install the solar inverter vertically or at a maximum back tilt of 75 degrees to facilitate heat dissipation.
- Do not install the solar inverter at forward tilted, excessive back tilted, side tilted, horizontal, or upside down positions.

 Copyright © Huawei Technologies Co., Ltd.

Figure 4-2 Angle

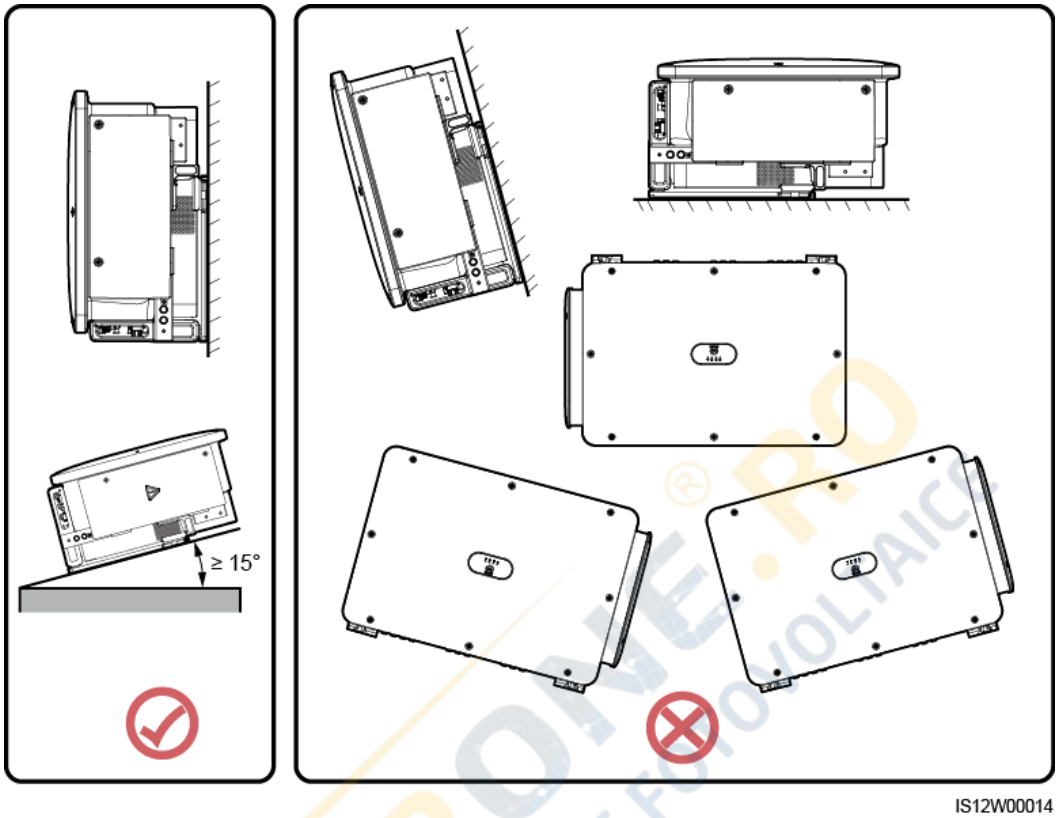

Installation Dimensions Requirements

Reserve enough space around the solar inverter for installation and heat dissipation.

Figure 4-3 Installation clearance

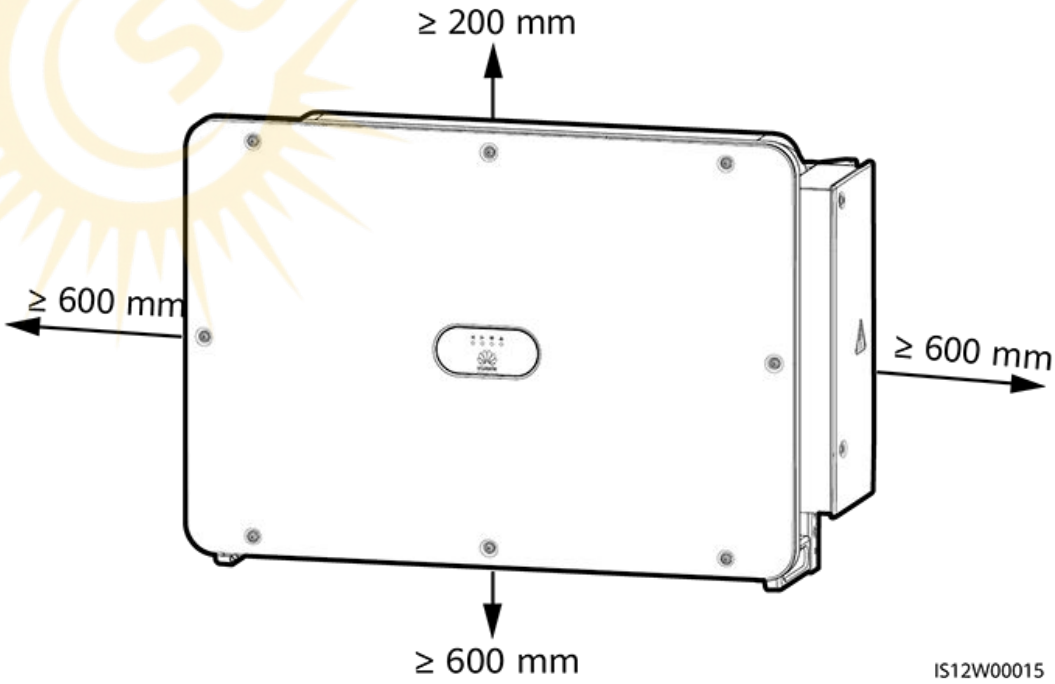

NOTE

For ease of installing the solar inverter on the mounting bracket, connecting cables to the bottom of the solar inverter, and maintaining the solar inverter in future, it is recommended that the bottom clearance be between 600 mm and 730 mm. If you have any question about the clearance, consult the local technical support engineers.

When installing multiple solar inverters, install them in horizontal mode if sufficient space is available and install them in triangle mode if no sufficient space is available. Stacked installation is not recommended.

Figure 4-4 Horizontal installation mode (recommended)

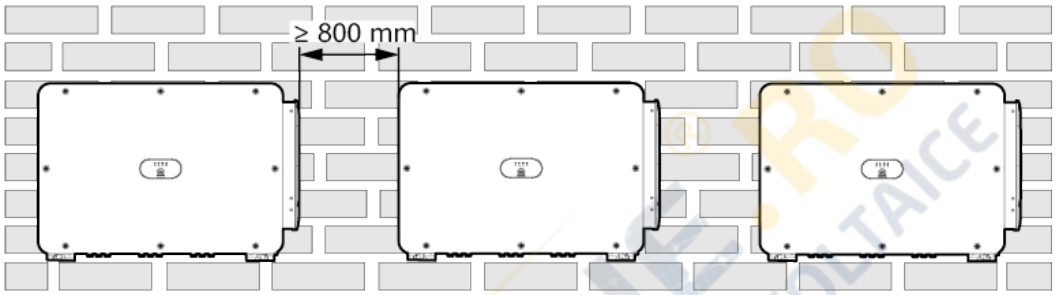

Figure 4-5 Triangle installation mode (recommended)

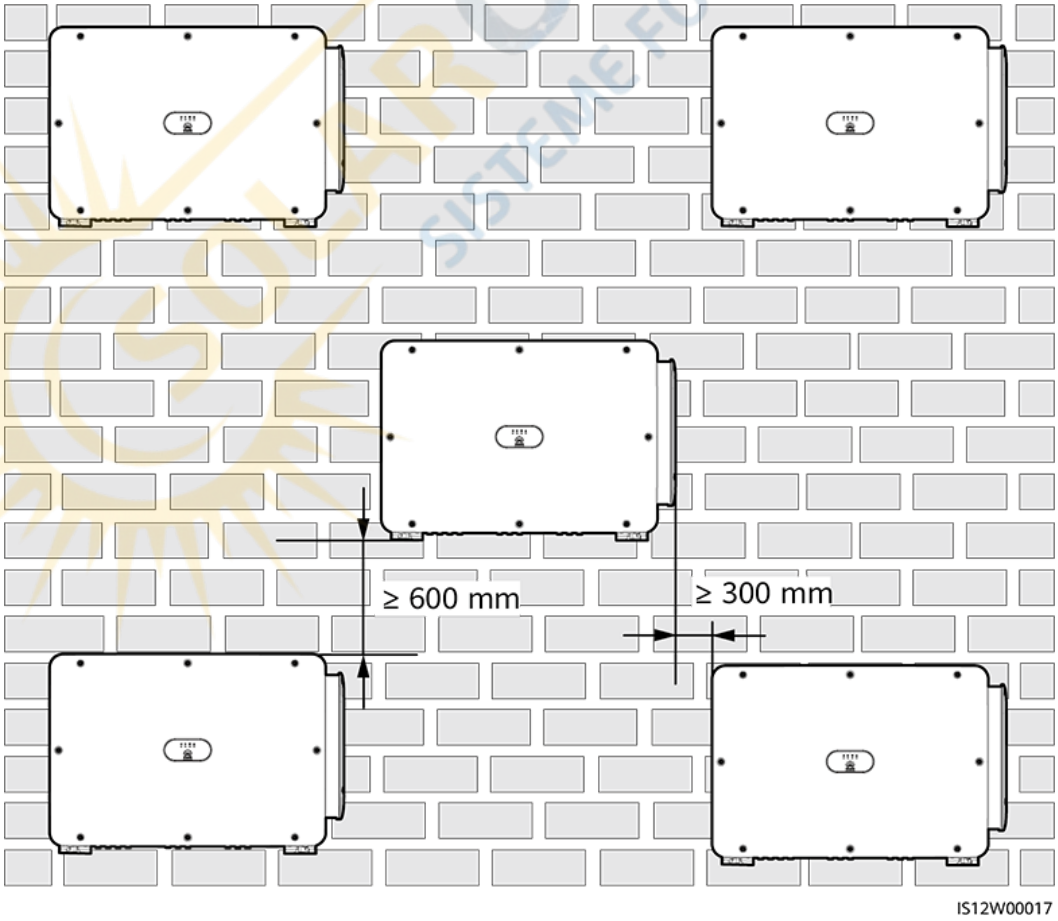

Figure 4-6 Stacked installation mode (not recommended)

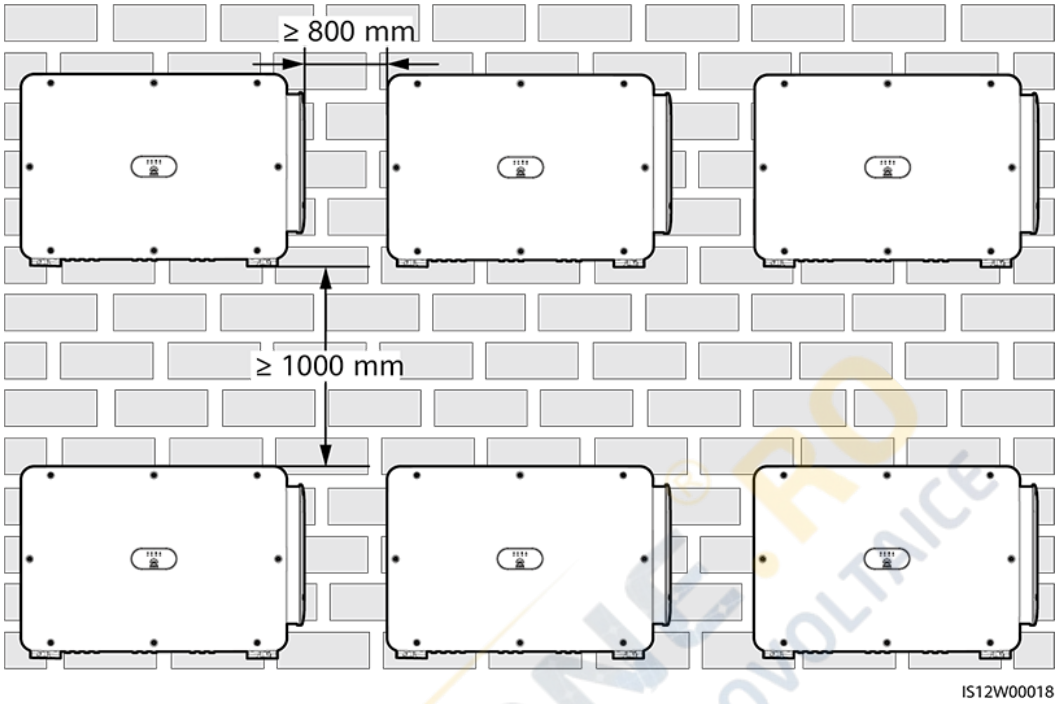

4.4 Installing the Mounting Bracket

Before installing the mounting bracket, remove the security Torx wrench and keep it for later use.

Figure 4-7 Position for binding the security Torx wrench

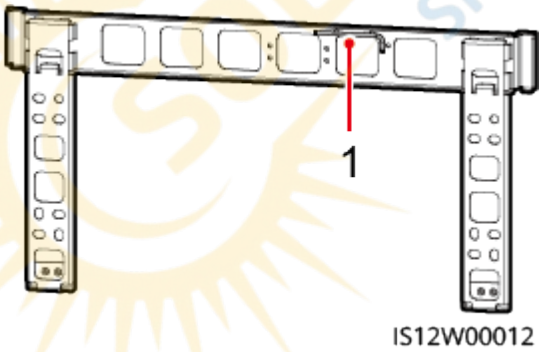

(1) Security Torx wrench

The mounting bracket of the solar inverter has four groups of tapped holes, each group containing four tapped holes. Mark any hole in each group based on site requirements and mark four holes in total. The two round holes are recommended.

Figure 4-8 Hole dimensions

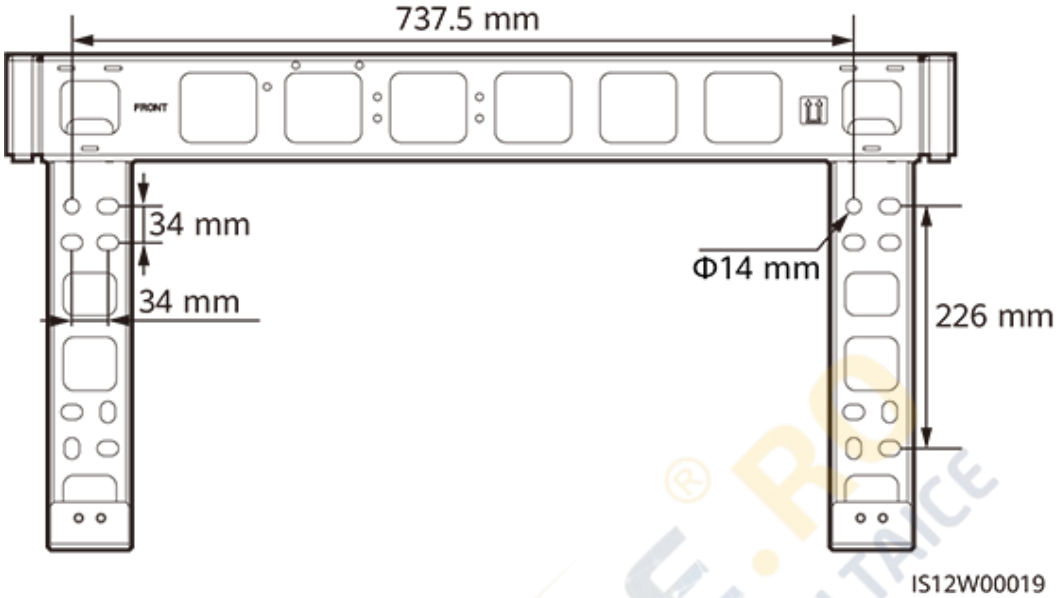

4.4.1 Support-mounted Installation

Prerequisites

M12x40 bolt assemblies are supplied with the mounting bracket. If the bolt length does not meet the installation requirements, prepare M12 bolt assemblies by yourself and use them together with the supplied M12 nuts.

Procedure

Step 1 Determine the positions for drilling holes using the mounting bracket. Level the positions of mounting holes using a bubble or digital level, and mark the positions with a marker.

Step 2 Drill holes using a hammer drill. It is recommended that anti-rust measures be taken on the positions for drilling holes.

Step 3 Secure the mounting bracket.

Figure 4-9 Installing the mounting bracket

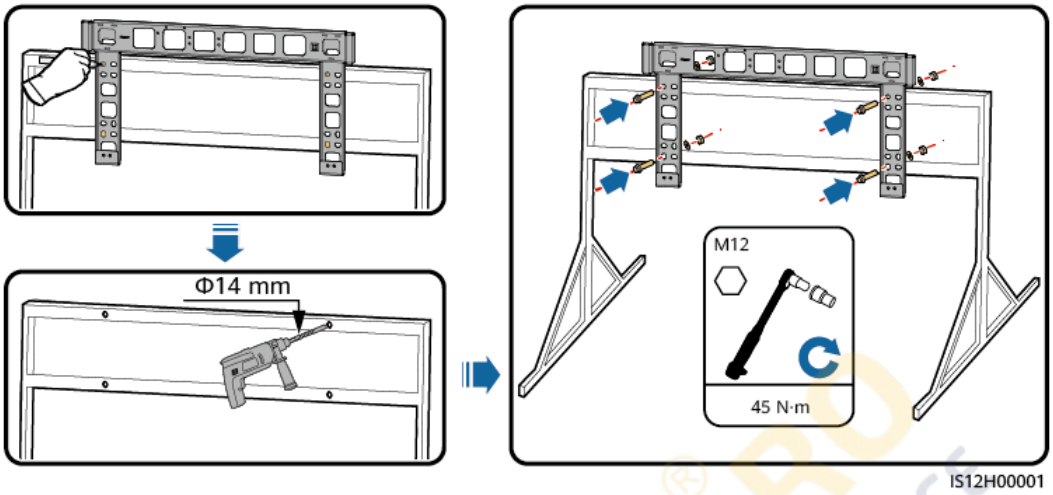

----End

4.4.2 Wall-mounted Installation

Prerequisites

You have prepared expansion bolts. M12x60 stainless steel expansion bolts are recommended.

Procedure

Step 1 Determine the positions for drilling holes using the mounting bracket. Level the positions of mounting holes using a bubble or digital level, and mark the positions with a marker.

Step 2 Drill holes using a hammer drill and install expansion bolts.

WARNING

Avoid drilling holes in the position of the wall with water pipes and power cables buried inside.

NOTICE

- To prevent dust inhalation or contact with eyes, wear safety goggles and an anti-dust respirator when drilling holes.
- Clean up any dust in and around the holes using a vacuum cleaner and measure the distance between holes. If the holes are inaccurately positioned, drill a new set of holes.
- Level the head of the expansion sleeve with the concrete wall after removing the bolt, spring washer, and flat washer. Otherwise, the mounting bracket will not be securely installed on the wall.

 Copyright © Huawei Technologies Co., Ltd.

Step 3 Secure the mounting bracket.

Figure 4-10 Installing the mounting bracket

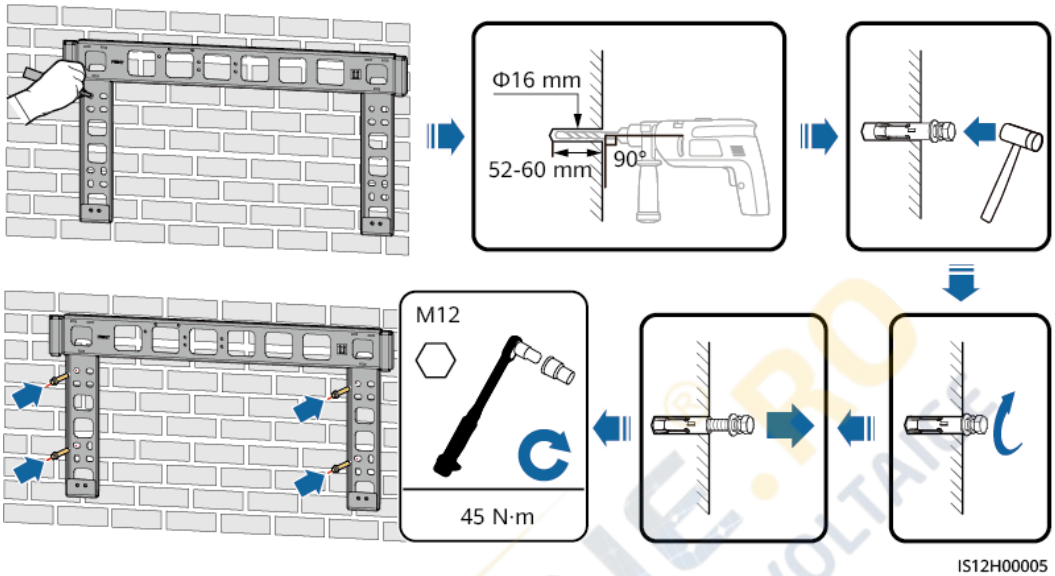

----End

4.5 Installing a Solar Inverter

Context

NOTICE

- Move the solar inverter with care to prevent device damage and personal injury.
- It takes multiple persons or a pallet truck to move the solar inverter.
- Do not use the ports and wiring terminals at the bottom to support any weight of the solar inverter.
- When you need to temporally place the solar inverter on the ground, use foam, paper, or other protection material to prevent damage to its cover.
- Use lifting handles to facilitate installation, which are optional and delivered separately. Ensure that the lifting handles are securely installed. After the installation is complete, remove the lifting handles and keep them properly.
- To avoid damage to the equipment, do not lift or hoist a solar inverter with an improper hold as shown in **Figure 4-12**.

 Copyright © Huawei Technologies Co., Ltd.

Figure 4-11 Positions for installing the lifting handles

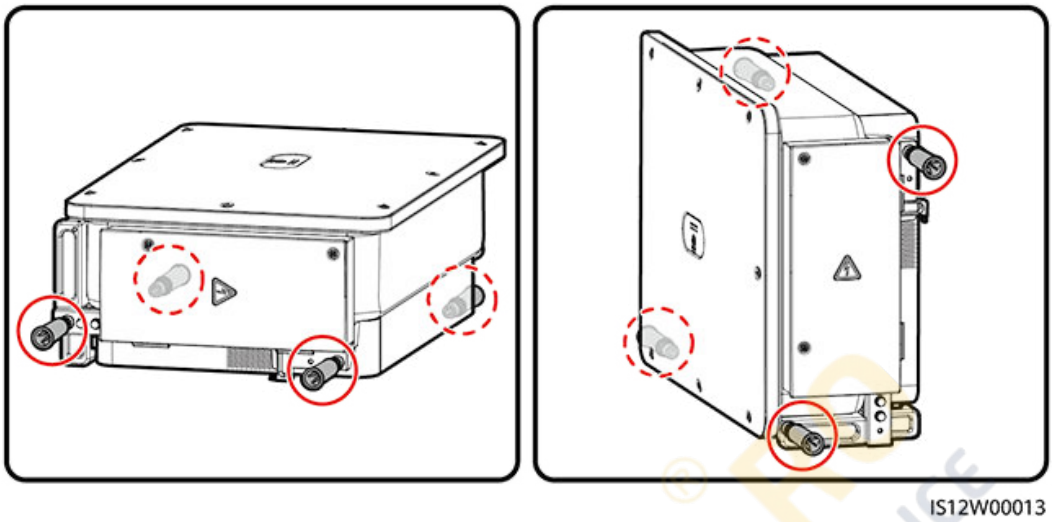

(A) Transportation scenario (B) Installation scenario

Figure 4-12 Lifting positions

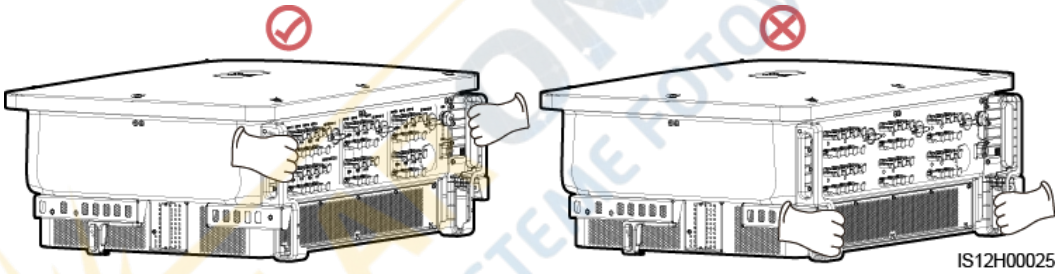

Procedure

Step 1 Lift the solar inverter from the packing case and move it to the installation position.

Figure 4-13 Taking out the solar inverter

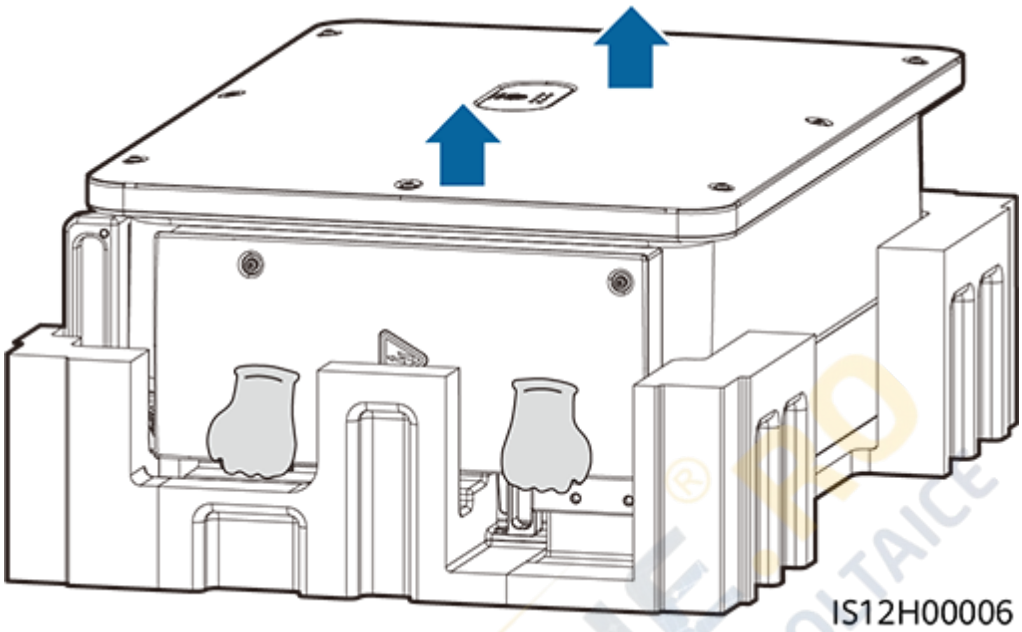

Step 2 (Optional) Install screws for locking DC switches.

NOTE

For the model used in Australia, perform this step to meet the local standards

Figure 4-14 Install screws for locking DC switches

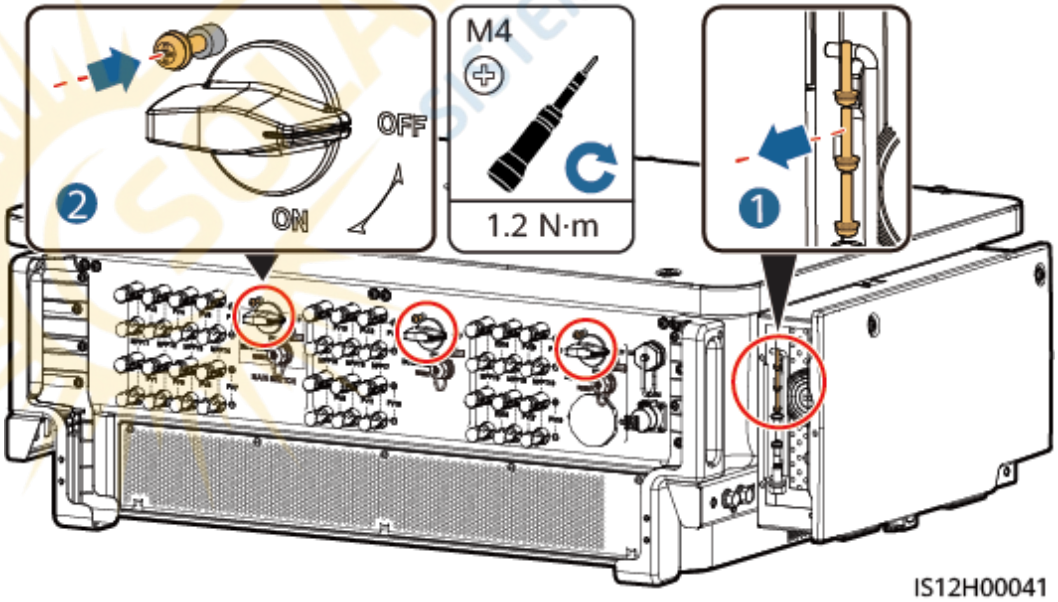

Step 3 Lift the solar inverter and keep it upright.

Figure 4-15 Lifting the solar inverter and keeping it upright

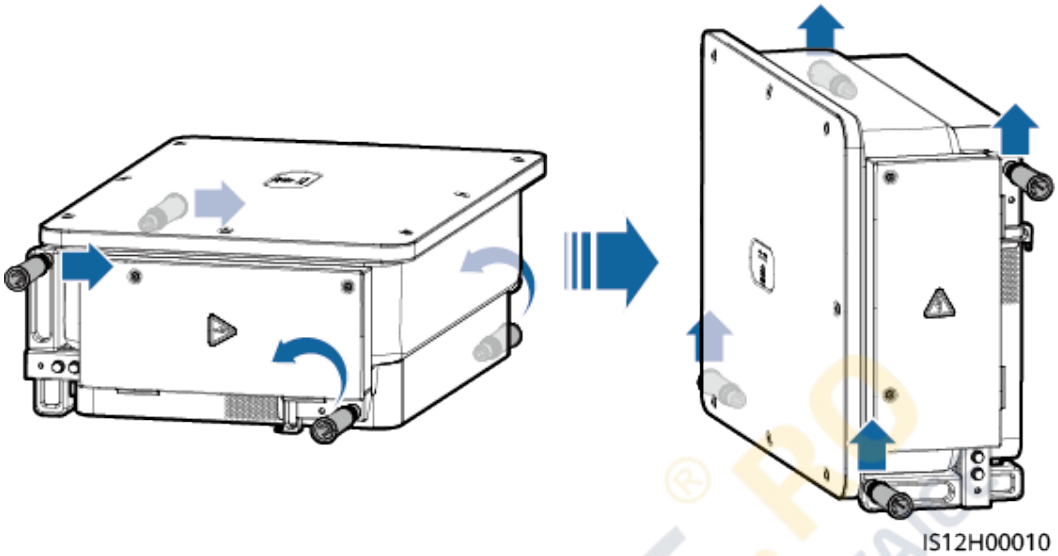

Step 4 If the installation position is too high to install the solar inverter on the mounting bracket, run a rope that is strong enough to bear the solar inverter through the two lifting eyes, and hoist the solar inverter.

NOTICE

Hoist the solar inverter with care to protect it from colliding with the wall or other objects.

 Copyright © Huawei Technologies Co., Ltd.

Figure 4-16 Hoisting the solar inverter

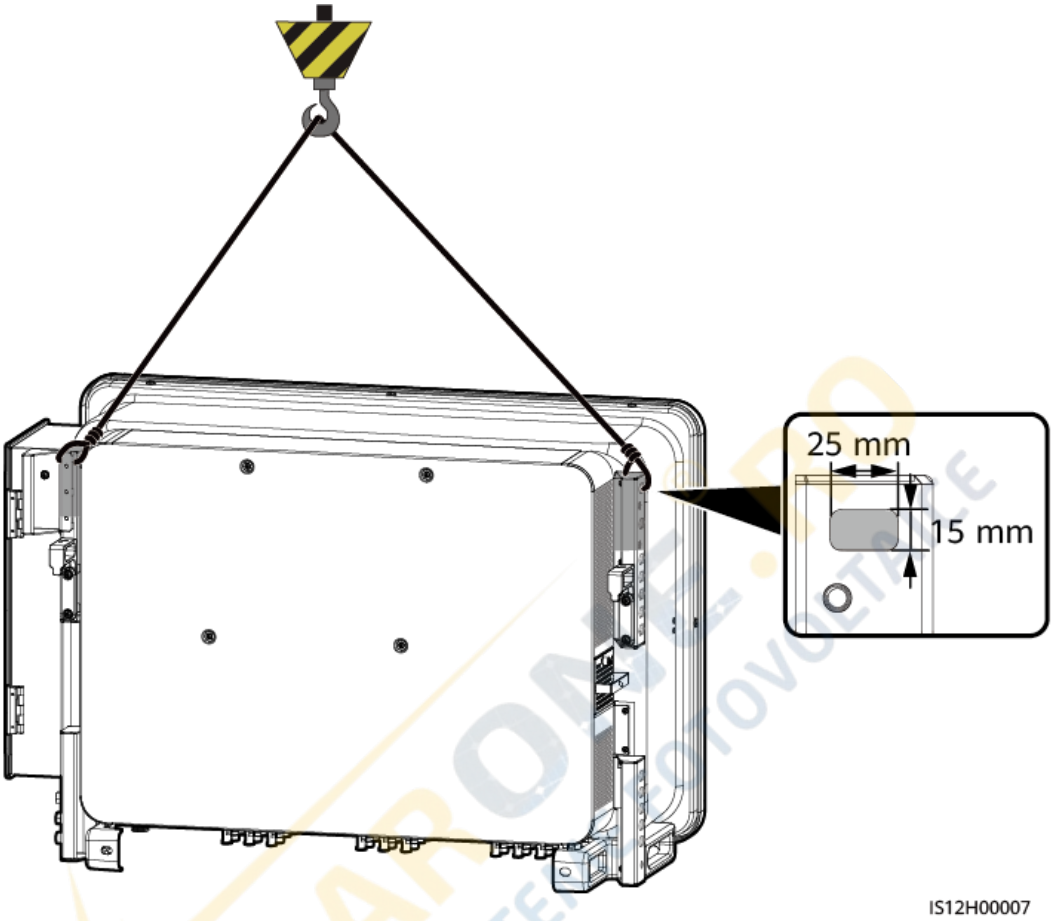

Step 5 Install the solar inverter on the mounting bracket and align the solar inverter enclosure with the mounting bracket.

Figure 4-17 Mounting the solar inverter

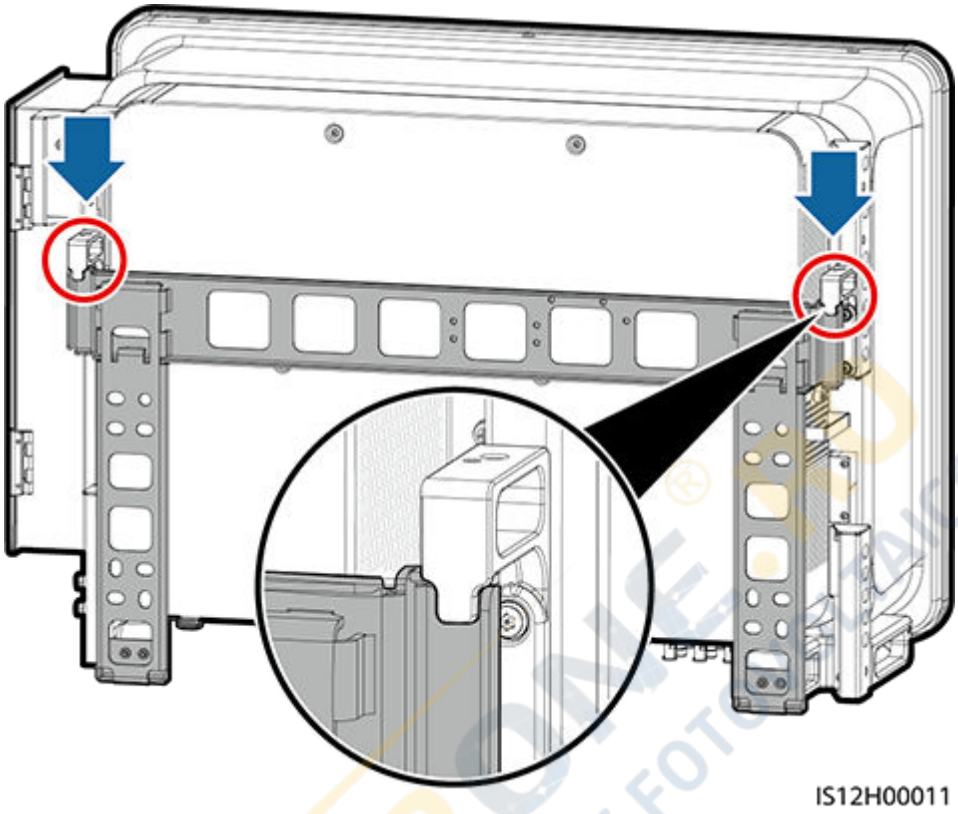

Step 6 Secure the solar inverter.

Figure 4-18 Tightening security Torx screws

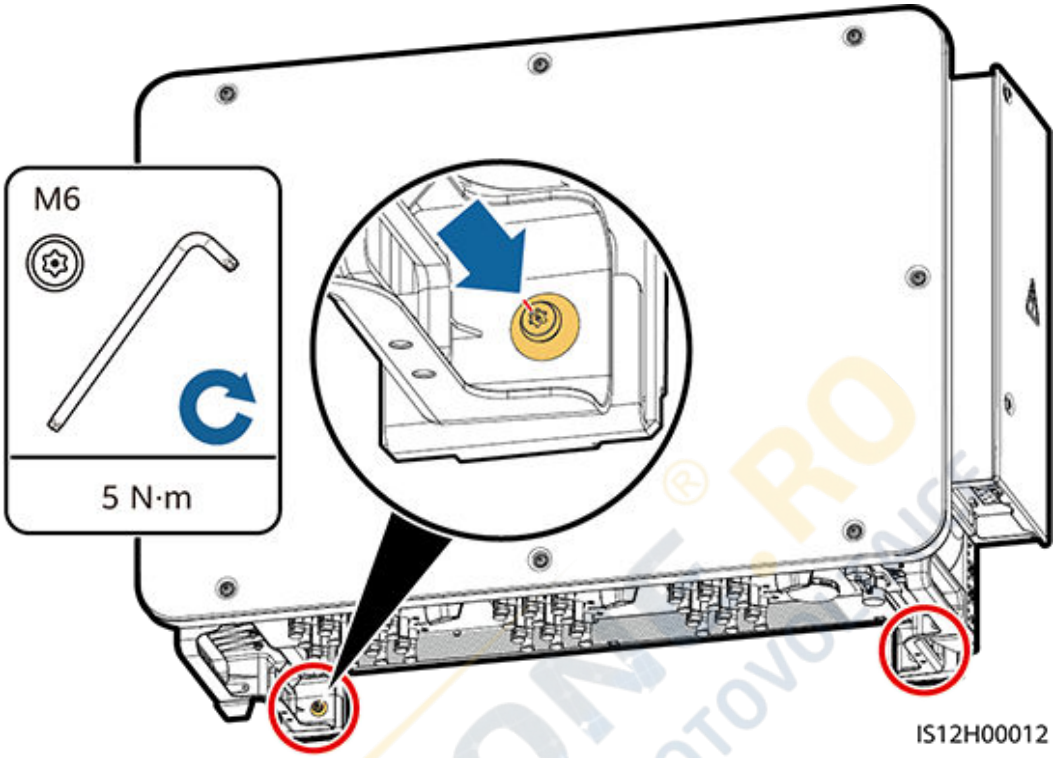

----End

5 Electrical Connections

5.1 Precautions

DANGER

After the PV array receives solar irradiance, it transmits the DC voltage to the solar inverter. Before connecting cables, ensure that the three DC switches on the solar inverter are set to OFF. Otherwise, the high voltage of the solar inverter may result in electric shocks.

WARNING

- The device damage caused by incorrect cable connections is beyond the warranty scope.
- Only qualified technicians can perform operations about electrical connection.
- Wear proper PPE at all time when connecting cables.
- To prevent poor cable connection due to overstress, leave enough slack before connecting the cables to the appropriate ports.

NOTE

The cable colors shown in the electrical connection diagrams provided in this chapter are for reference only. Select cables in accordance with local cable specifications (green-and-yellow cables are only used for protective earthing).

5.2 Preparing Cables

SUN2000 solar inverters support RS485 communication and MBUS communication.

 Copyright © Huawei Technologies Co., Ltd.

NOTICE

The MBUS communication is applicable to medium-voltage grid connection scenarios and non-low-voltage public grid connection scenarios (industrial environment).

NOTE

In the networking diagram, — indicates the power cable, → indicates the power flow direction, and — and ∧∧∧ indicate the signal flow.

Figure 5-1 RS485 networking (SmartLogger)

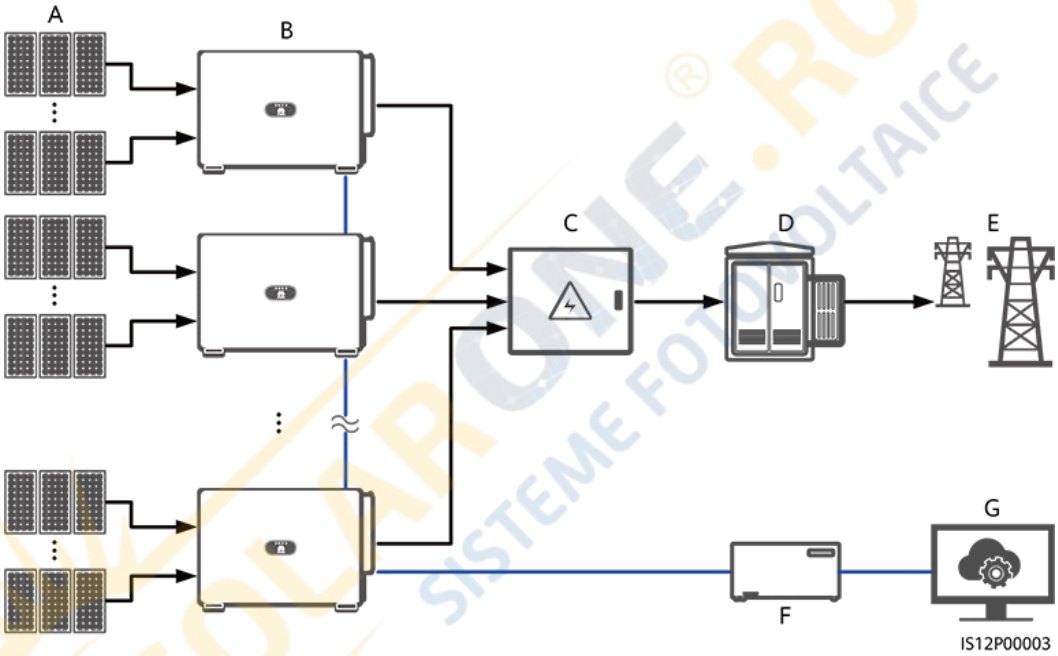

(A) PV string	(B) SUN2000	(C) AC combiner box
(D) Transformer station	(E) Power grid	(F) SmartLogger
(G) Management system	-	-

Figure 5-2 RS485 networking (SDongle)

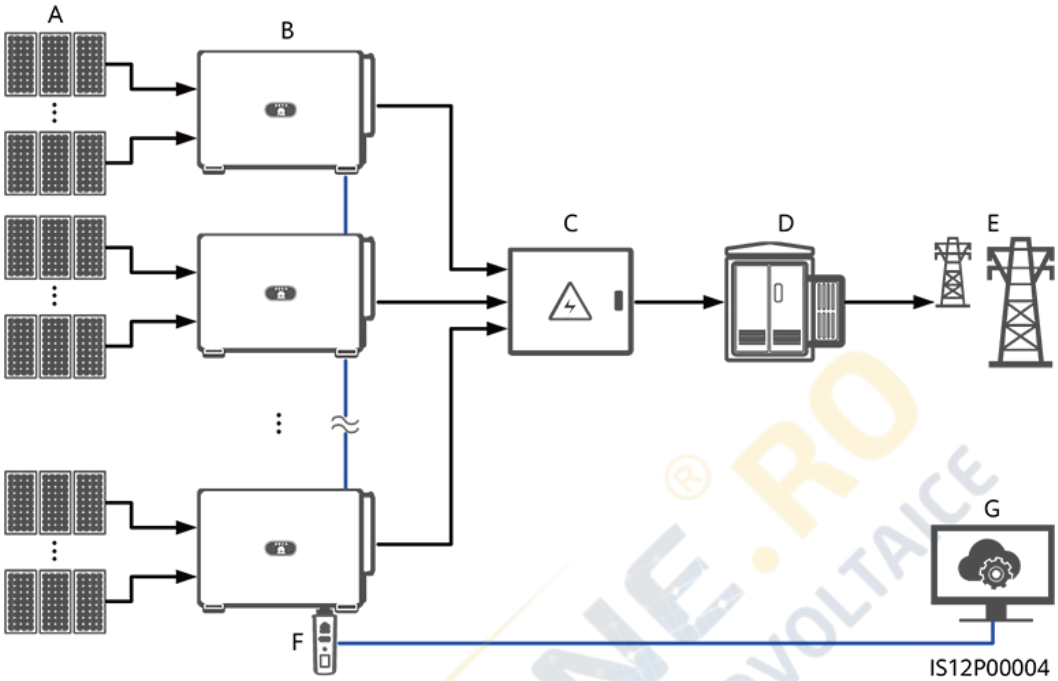

(A) PV string	(B) SUN2000	(C) AC combiner box
(D) Transformer station	(E) Power grid	(F) SDongle
(G) Management system	-	-

Figure 5-3 MBUS networking (SmartLogger)

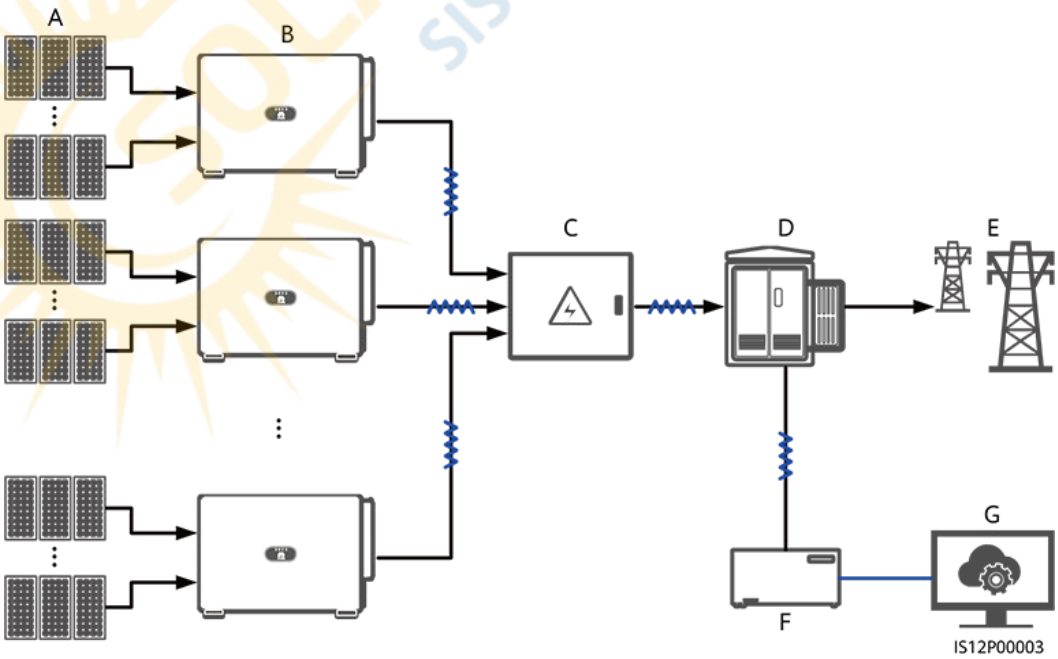

(A) PV string	(B) SUN2000	(C) AC combiner box
(D) Transformer station	(E) Power grid	(F) SmartLogger

(G) Management system	-	-

Figure 5-4 MBUS networking (SDongle)

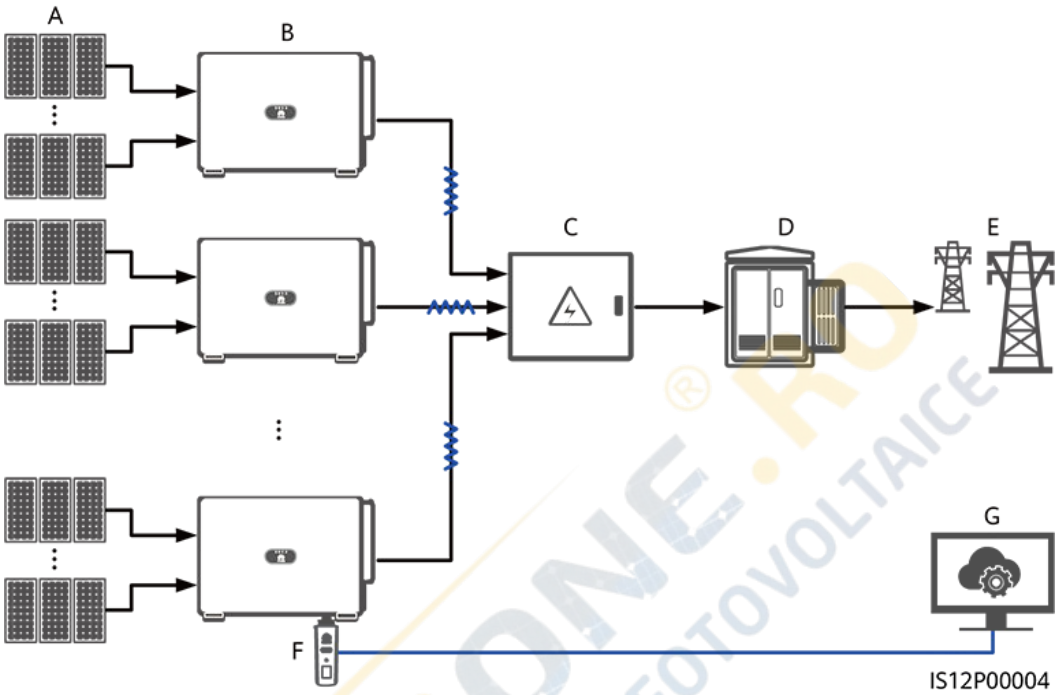

(A) PV string	(B) SUN2000	(C) AC combiner box
(D) Transformer station	(E) Power grid	(F) SDongle
(G) Management system	-	-

NOTICE

- To ensure the system response speed, it is recommended that less than 30 solar inverters be connected to each COM port on the SmartLogger and that less than 10 solar inverters be cascaded over the SDongle.
- The RS485 communication distance between the last solar inverter and the SmartLogger cannot exceed 1000 m.

Figure 5-5 Cable connections (configure the components in the dotted box as required)

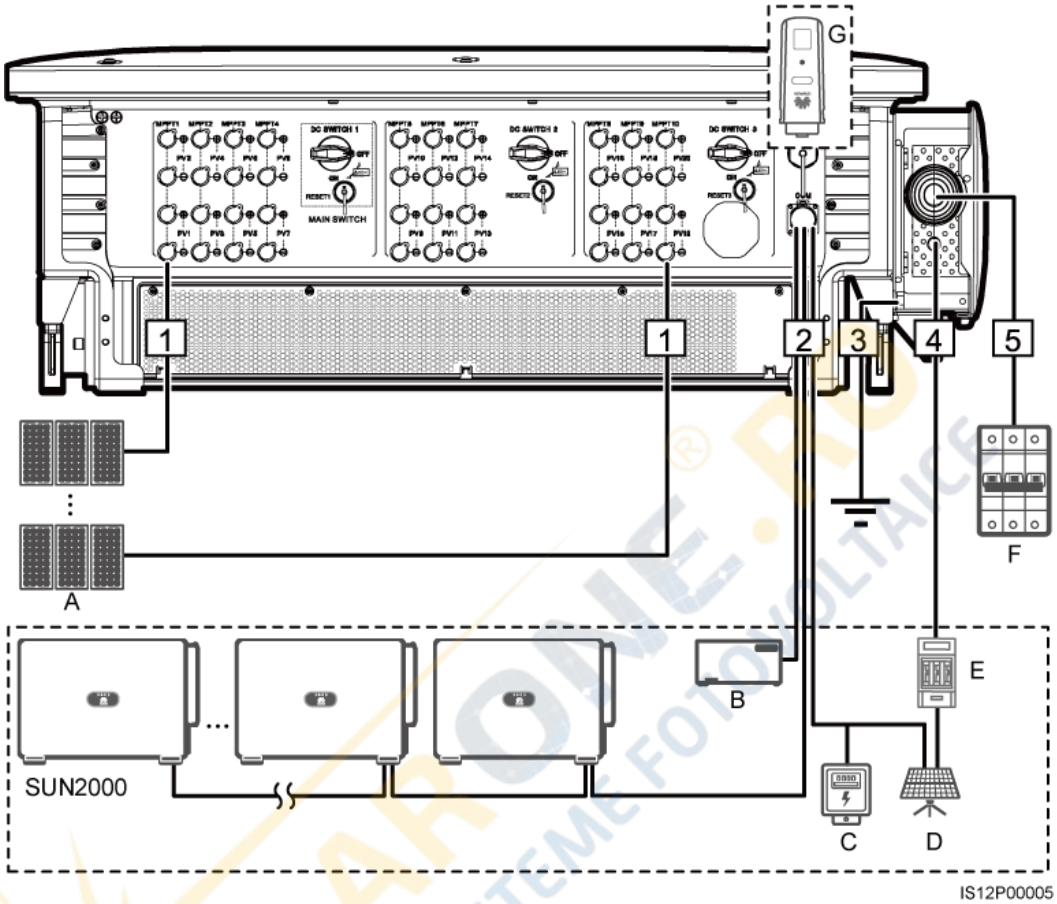

Table 5-1 Components

No.	Component	Description	Source
A	PV string	• PV strings consist of PV modules in series. • A solar inverter supports 20 PV string inputs.	Prepared by the customer
B	SmartLogger	The solar inverter communicates with the management system through the SmartLogger.	Purchased from Huawei
C	Power Meter	Implements power control at the grid-tied point in low voltage scenarios using a power meter.	Prepared by the customer
D	Support tracking system	Adjusts the angle of the supports.	Prepared by the customer

No.	Component	Description	Source
E	Fuse/Circuit breaker	The tracking system should be equipped with an overcurrent protection device or component. The power cable between the device or component and the wiring terminal should be no longer than 2.5 m. Therefore, a fuse or a circuit breaker is recommended. ● Installed between the solar inverter and tracking control box ● Fuse specifications: rated voltage ≥ 500 V; rated current: 16 A; protection: gG ● Circuit breaker specifications: rated voltage ≥ 500 V; rated current: 16 A; tripping: C	Prepared by the customer
F	AC switch	To ensure that the inverter can be safely disconnected from the power grid when an exception occurs, connect an AC switch to the AC side of the inverter. Select an appropriate AC switch in accordance with local industry standards and regulations. Huawei recommends the following switch specifications: ● Installed in the AC combiner box ● Recommended: a three-phase AC circuit breaker with a rated voltage greater than or equal to 500 V AC and a rated current of 250 A	Prepared by the customer
G	SDongle	The solar inverter communicates with the management system through the SDongle.	Purchased from Huawei

NOTICE

The solar inverter has an RCMU inside. Its external AC switch should be a three-phase circuit breaker or other AC load circuit breakers to safely disconnect the solar inverter from the power grid.

NOTE

- The cable diameter must comply with local cable standards.
- The factors that affect cable selection include the rated current, cable type, routing mode, ambient temperature, and maximum expected line loss.

 Copyright © Huawei Technologies Co., Ltd.

Table 5-2 Cable description of a 3-pin model (S: cross-sectional area of the AC cable conductor; S_p: cross-sectional area of the protective earthing cable conductor)

No.	Cable	Category	Conductor Cross-Sectional Area Range	Outer Diameter	Source
1	DC input power cable	PV cable that meets the 1100 V standard	4–6 mm^2	5.5–9 mm	Prepared by the customer
2	RS485 communications cable	Outdoor shielded twisted pair that meets the local standard	0.25–1 mm^2	• One or two communications cables: 4–11 mm • Three communications cables: 4–8 mm	Prepared by the customer
3	Protective earthing (PE) cable[1]	Single-core outdoor copper cable and M10 OT/DT terminals	$S_p \geq S/2$	N/A	Prepared by the customer
4	Tracking system power cable	Three-core outdoor copper cable with dual-layer protection	10 mm^2	15–18 mm	Prepared by the customer

 Copyright © Huawei Technologies Co., Ltd.

No.	Cable	Category	Conductor Cross-Sectional Area Range	Outer Diameter	Source
5	AC output power cable (multi-core)	• If you connect a PE cable to the ground point on the enclosure, you are advised to use a three-core (L1, L2, and L3) outdoor cable and M12 OT/DT terminals (L1, L2, and L3). • If you connect a PE cable to the ground point in the maintenance compartment, you are advised to use a four-core (L1, L2, L3, and PE) outdoor cable, M12 OT/DT terminals (L1, L2, and L3), and M10 OT/DT terminals (PE). You do not need to prepare a PE cable.	• Copper cable: – S: 70–240 mm^2 – $S_p \geq S/2$ • Aluminum alloy cable or copper-clad aluminum cable: – S: 95–240 mm^2 – $S_p \geq S/2$	24–66 mm	Prepared by the customer
	AC output power cable (single-core)[2]	You are advised to use a single-core outdoor cable and M12 OT/DT terminals.	• Copper cable: – S: 70–240 mm^2 • Aluminum alloy cable or copper-clad aluminum cable: – S: 95–240 mm^2	14–32 mm	Prepared by the customer

Note [1]: The value of S_p is valid only if the conductors of the PE cable and AC power cable use the same material. If the materials are different, ensure that the conductor of the PE cable with a proper cross-sectional area produces a conductance equivalent to that of the cable specified in the table. The specifications of the PE cable are subject to this table or calculated according to IEC 60364-5-54.

Note [2]: For some models, the outer diameter of a single-core cable ranges from 14 mm to 36 mm based on the label in the maintenance compartment.

 Copyright © Huawei Technologies Co., Ltd.

Table 5-3 Cable description of 4-pin models (S: cross-sectional area of the AC cable conductor; S_p: cross-sectional area of the PE cable conductor)

No.	Cable	Category	Conductor Cross-Sectional Area Range	Outer Diameter	Source
1	DC input power cable	PV cable that meets the 1100 V standard	4–6 mm^2	5.5–9 mm	Prepared by the customer
2	RS485 communications cable	Outdoor shielded twisted pair that meets the local standard	0.25–1 mm^2	• One or two communications cables: 4–11 mm • Three communications cables: 4–8 mm	Prepared by the customer
3	PE cable[1]	Single-core outdoor copper cable and M10 OT/DT terminals	$S_p \geq S/2$	N/A	Prepared by the customer
4	Tracking system power cable	Three-core outdoor copper cable with dual-layer protection	10 mm^2	15–18 mm	Prepared by the customer

 Copyright © Huawei Technologies Co., Ltd.

No.	Cable	Category	Conductor Cross-Sectional Area Range	Outer Diameter	Source
5	AC output power cable (multi-core)	• If you connect a PE cable to the ground point on the enclosure and the neutral wire is not used, you are advised to use a three-core (L1, L2, and L3) outdoor cable and M12 OT/DT terminals (L1, L2, and L3). • If you connect a PE cable to the ground point in the maintenance compartment and the neutral wire is not used, you are advised to use a four-core (L1, L2, L3, and PE) outdoor cable, M12 OT/DT terminals (L1, L2, and L3), and M10 OT/DT terminals (PE). • If you connect a PE cable to the ground point on the enclosure and the neutral wire is used, you are advised to use a four-core (L1, L2, L3, and N) outdoor cable and M12 OT/DT terminals (L1, L2, L3, and N). • If you connect a PE cable to the ground point in the maintenance compartment and the neutral wire is used, you are advised to use a five-core (L1, L2, L3, N, and PE) outdoor cable, M12 OT/DT terminals (L1, L2, L3, and N), and M10 OT/DT terminals (PE).	• Copper cable: – S: 70–240 mm^2 – $S_p \geq S/2$ • Aluminum alloy cable or copper-clad aluminum cable: – S: 95–240 mm^2 – $S_p \geq S/2$	24–66 mm	Prepared by the customer

No.	Cable	Category	Conductor Cross-Sectional Area Range	Outer Diameter	Source
	AC output power cable (single-core)	You are advised to use a single-core outdoor cable and M12 OT/DT terminals.	• Copper cable: – S: 70–240 mm^2 • Aluminum alloy cable or copper-clad aluminum cable: – S: 95–240 mm^2	14–32 mm	Prepared by the customer
Note [1]: The value of S_p is valid only if the conductors of the PE cable and AC power cable use the same material. If the materials are different, ensure that the conductor of the PE cable with a proper cross-sectional area produces a conductance equivalent to that of the cable specified in the table. The specifications of the PE cable are subject to this table or calculated according to IEC 60364-5-54.					

5.3 Connecting the PE Cable

Context

NOTICE

- Proper grounding is helpful for resisting the impact of surge voltage and improving the electromagnetic interference (EMI) performance. Before connecting the AC power cable, DC power cables, and communications cable, connect the PE cable to the PE point.
- You are advised to choose the ground point on the enclosure. The ground point in the maintenance compartment is used for connecting to the PE cable contained in the multi-core AC power cable.
- It is recommended that the PE cable of the solar inverter be connected to a nearby ground point. Connect the PE points of all solar inverters in the same array to ensure equipotential connections to PE cables.

Procedure

Step 1 Connect the PE cable to the PE point.

 Copyright © Huawei Technologies Co., Ltd.

Figure 5-6 Connecting the PE cable to the PE point (on the enclosure)

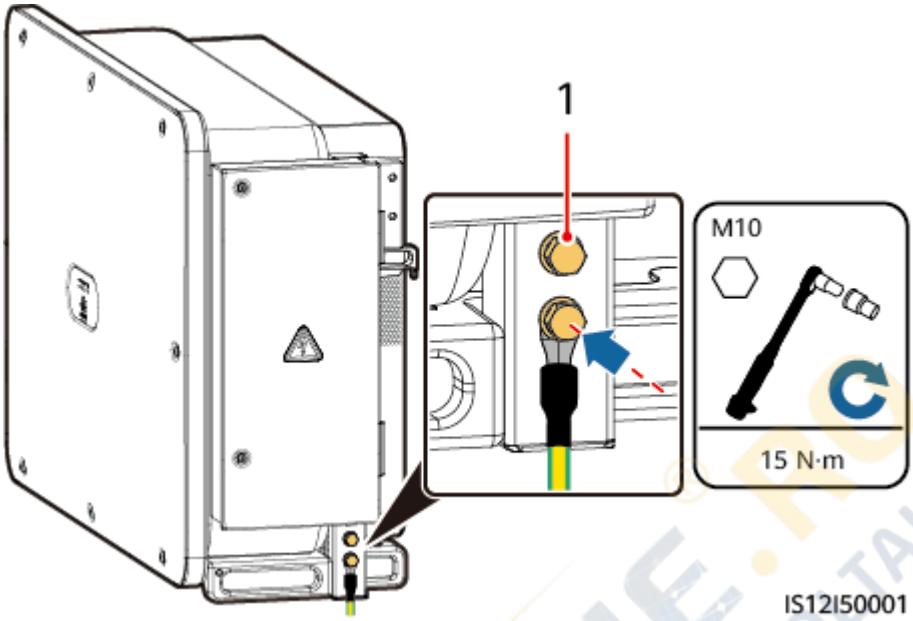

(1) Reserved PE point

----End

Follow-up Procedure

To enhance the corrosion resistance of a ground terminal, apply silica gel or paint on it after connecting the PE cable.

5.4 Opening the Maintenance Compartment Door

Precautions

CAUTION

- Do not open the panel of the solar inverter.
- Before opening the maintenance compartment door, ensure that no electrical connections are made for the solar inverter on the AC or DC side.
- If you need to open the maintenance compartment door in rainy or snowy days, take protective measures to prevent rain or snow from entering the maintenance compartment. If unavoidable, do not open the maintenance compartment door.
- Do not leave unused screws in the maintenance compartment.

Procedure

Step 1 Open the maintenance compartment door and install the support bar.

Figure 5-7 Opening the maintenance compartment door

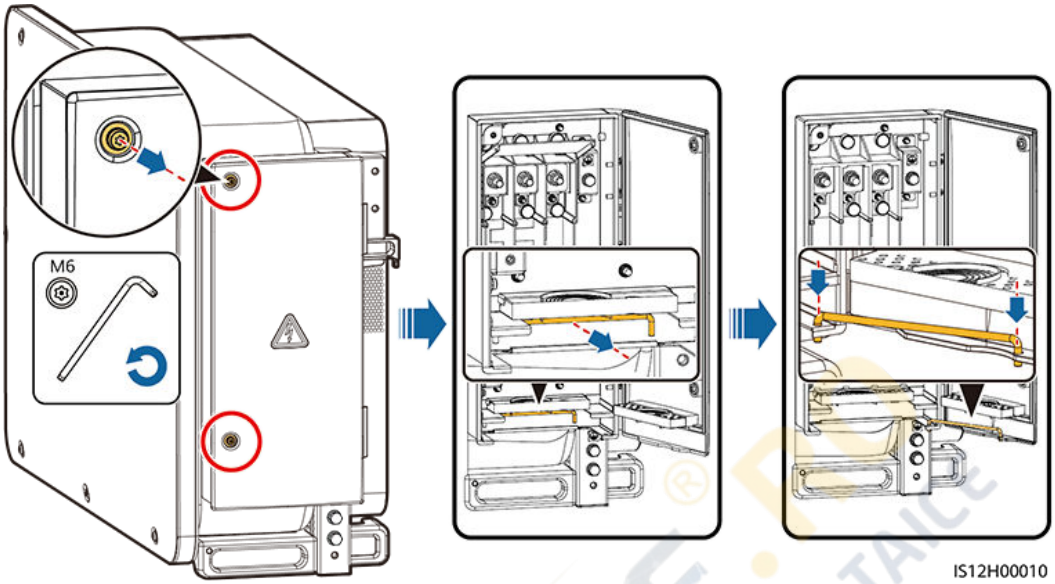

Step 2 Remove the accessories and keep them properly.

Figure 5-8 Removing the accessories

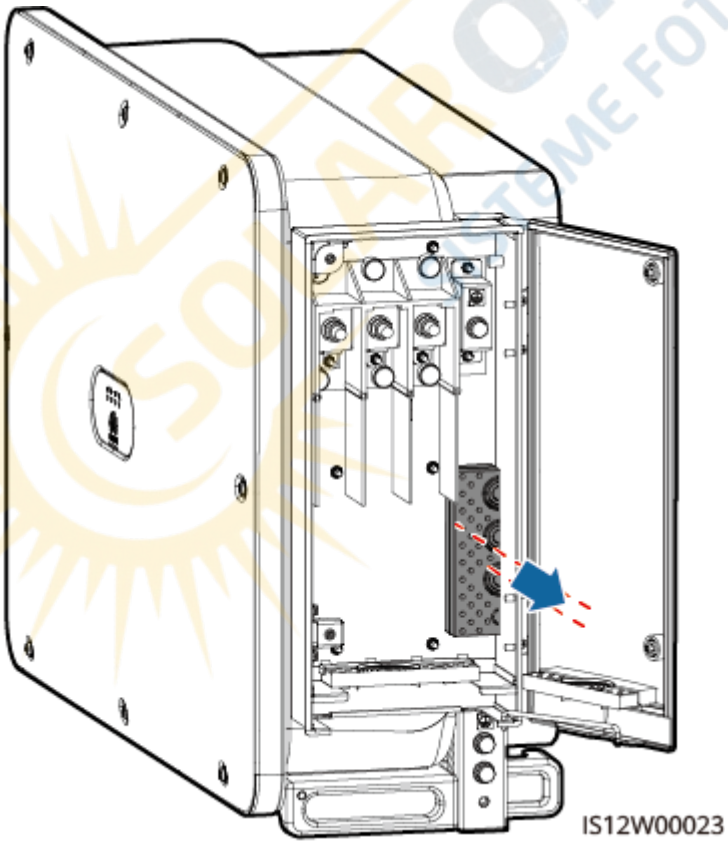

Step 3 Select a crimping module according to the type of the AC output power cable.

Figure 5-9 Select the crimping module

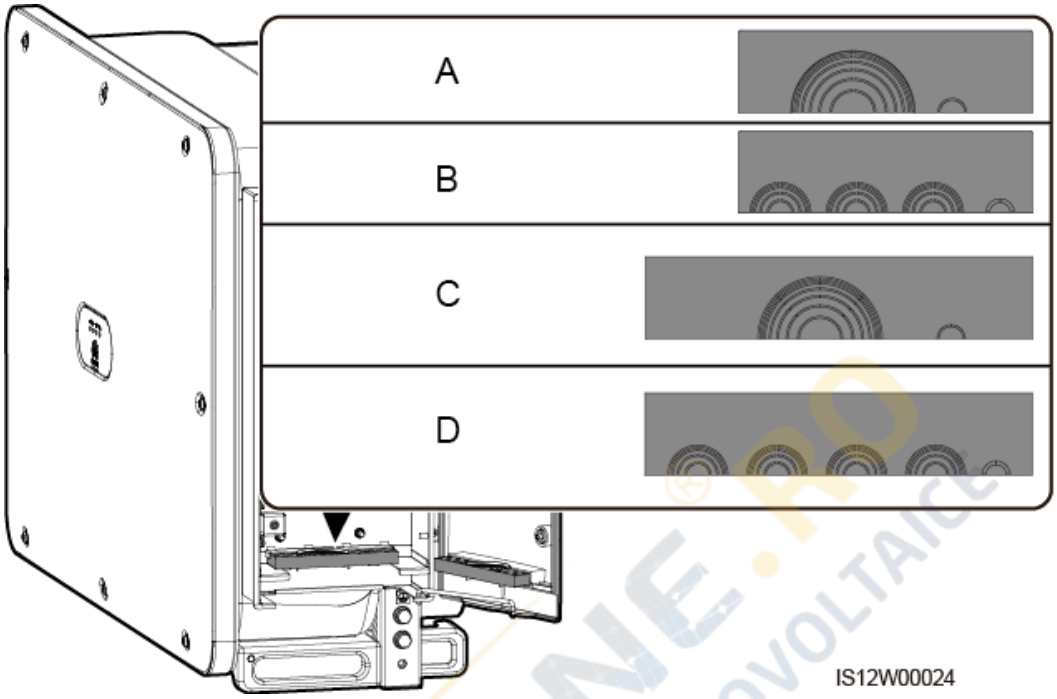

(A) Crimping module for multi-core cables of a 3-pin model
(B) Crimping module for single-core cables of a 3-pin model
(C) Crimping module for multi-core cables of 4-pin models
(D) Crimping module for single-core cables of 4-pin models

----End

Follow-up Procedure

Use scissors to cut off the joints of the rubber rings to remove them. All rubber rings are removed in the same way.

NOTICE

Remove the corresponding rubber rings in strict accordance with the cable diameter, and ensure that the crimping module is not damaged. Otherwise the protection level of the solar inverter will be affected.

Figure 5-10 Remove the rubber ring

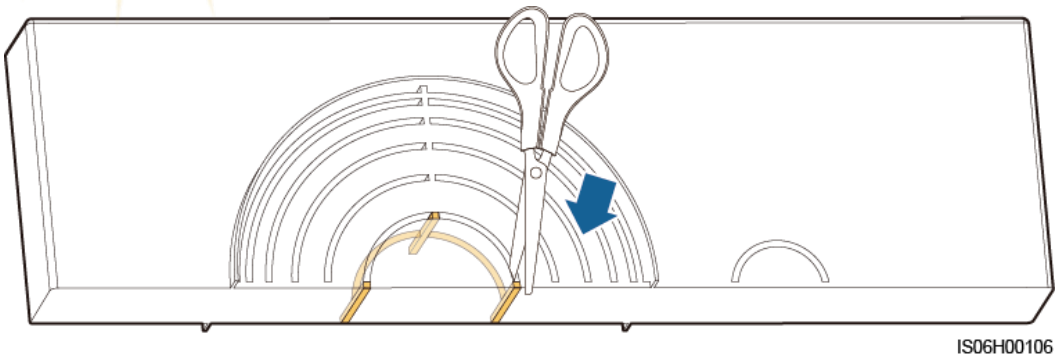

5.5 (Optional) Installing the Power Cable of the Tracking System

Precautions

WARNING

- The tracking system obtains power from the AC three-phase power grid. The rated voltage of the power supply is the rated output voltage of the solar inverter.
- Keep flammable materials away from the power cable.
- The power cable must be protected with a conduit to prevent short circuits caused by insulation layer damage.
- Connect the power cable of the tracking system before the AC output power cable. Otherwise, reworking will be caused.

Procedure

Step 1 Prepare a cable.

Step 2 Remove the corresponding rubber rings.

Step 3 Connect the power cable of the tracking system.

Figure 5-11 Connecting the power cable of the tracking system

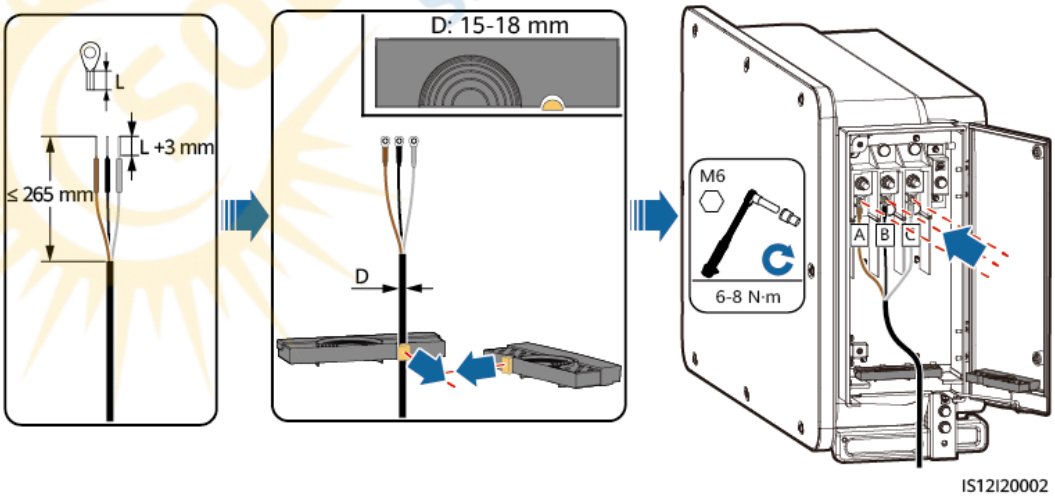

----End

5.6 Connecting an AC Output Power Cable

Prerequisites

- To ensure that the inverter can be safely disconnected from the power grid when an exception occurs, connect an AC switch to the AC side of the inverter. Select an appropriate AC switch in accordance with local industry standards and regulations.
- Connect the AC output power cable according to the requirements specified by local power grid operators.
- Connect the power cable of the tracking system before the AC output power cable. Otherwise, reworking will be caused.

Figure 5-12 Cable connection sequence

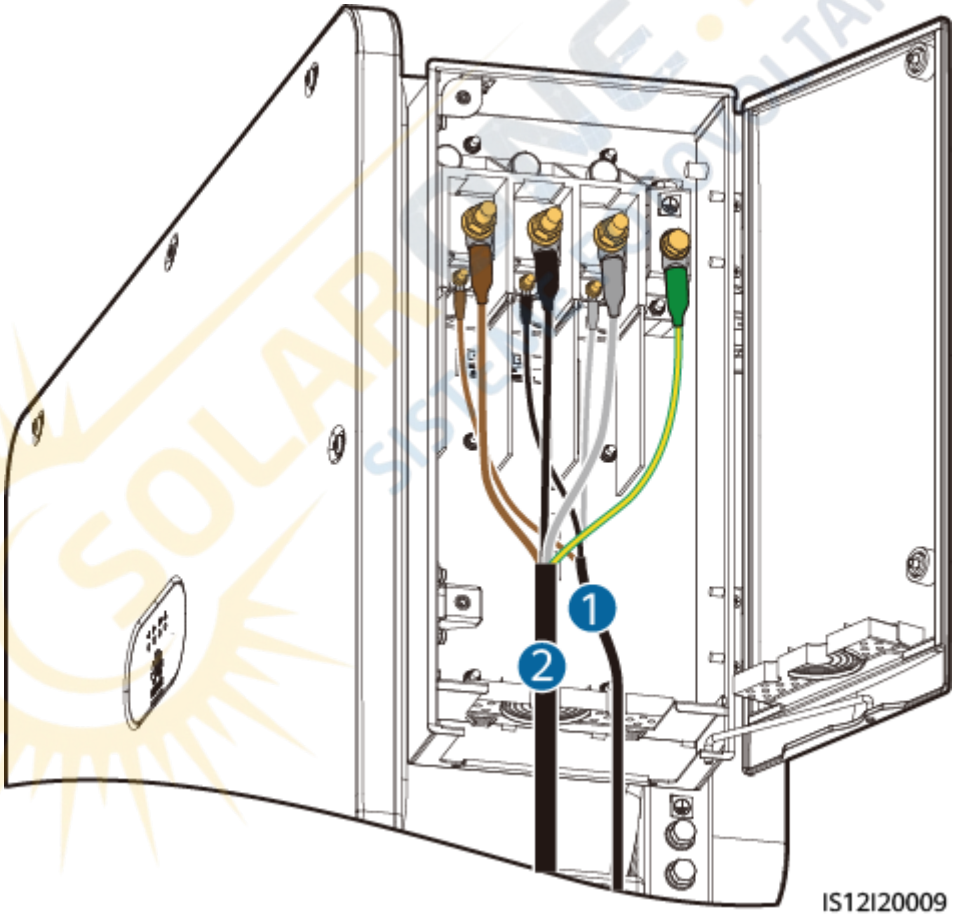

(1) Power cable of the tracking system (2) AC output power cable

WARNING

- Do not connect loads between the inverter and the AC switch that directly connects to the inverter. Otherwise, the switch may trip by mistake.
- If an AC switch is used with specifications beyond local standards, regulations, or the Company's recommendations, the switch may fail to turn off in a timely manner in case of exceptions, causing serious faults.

CAUTION

Each inverter must be equipped with an AC output switch. Multiple inverters cannot connect to the same AC output switch.

Requirements for the OT/DT Terminal

- If a copper cable is used, use copper wiring terminals.
- If a copper-clad aluminum cable is used, use copper wiring terminals.
- If an aluminum alloy cable is used, use copper-aluminum transition wiring terminals, or aluminum wiring terminals along with copper-aluminum transition spacers.

NOTICE

- Do not connect aluminum wiring terminals to the AC terminal block. Otherwise the electrochemical corrosion will occur and affect the reliability of cable connections.
- Comply with the IEC61238-1 requirements when using copper-aluminum transition wiring terminals, or aluminum wiring terminals along with copper-aluminum transition spacers.
- If copper-aluminum transition spacers are used, pay attention to the front and rear sides. Ensure that the aluminum sides of spacers are in contact with aluminum wiring terminals, and copper sides of spacers are in contact with the AC terminal block.

 Copyright © Huawei Technologies Co., Ltd.

Figure 5-13 Requirements for the OT/DT terminal

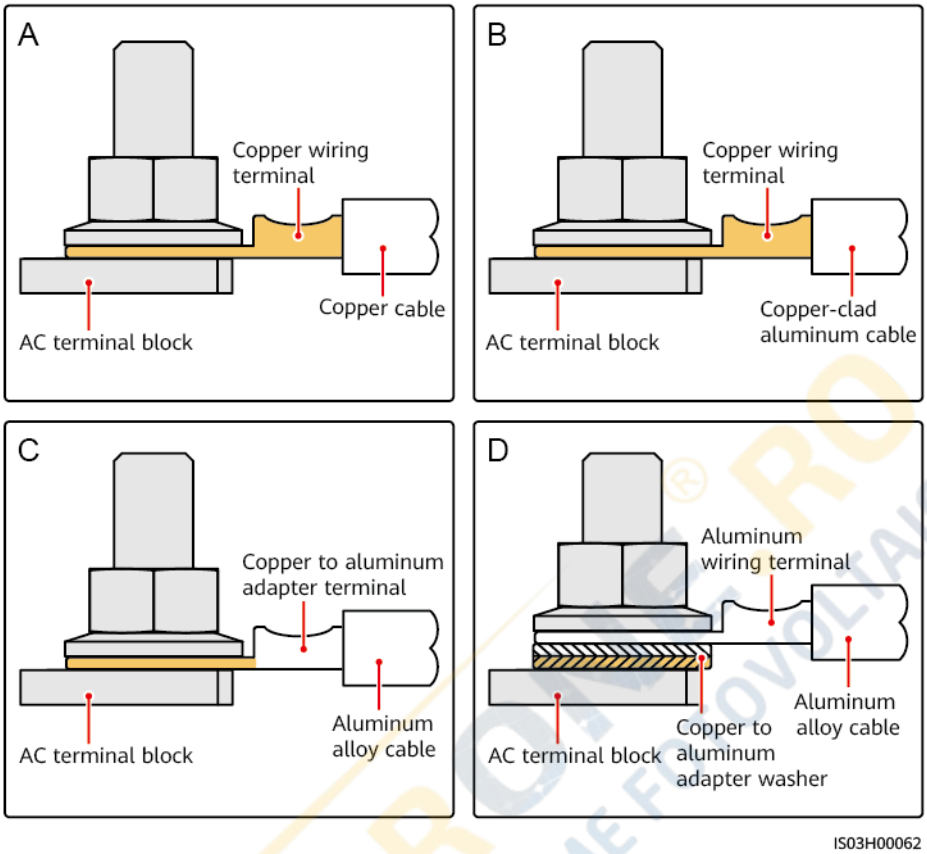

Figure 5-14 AC terminal block dimensions of a 3-pin model

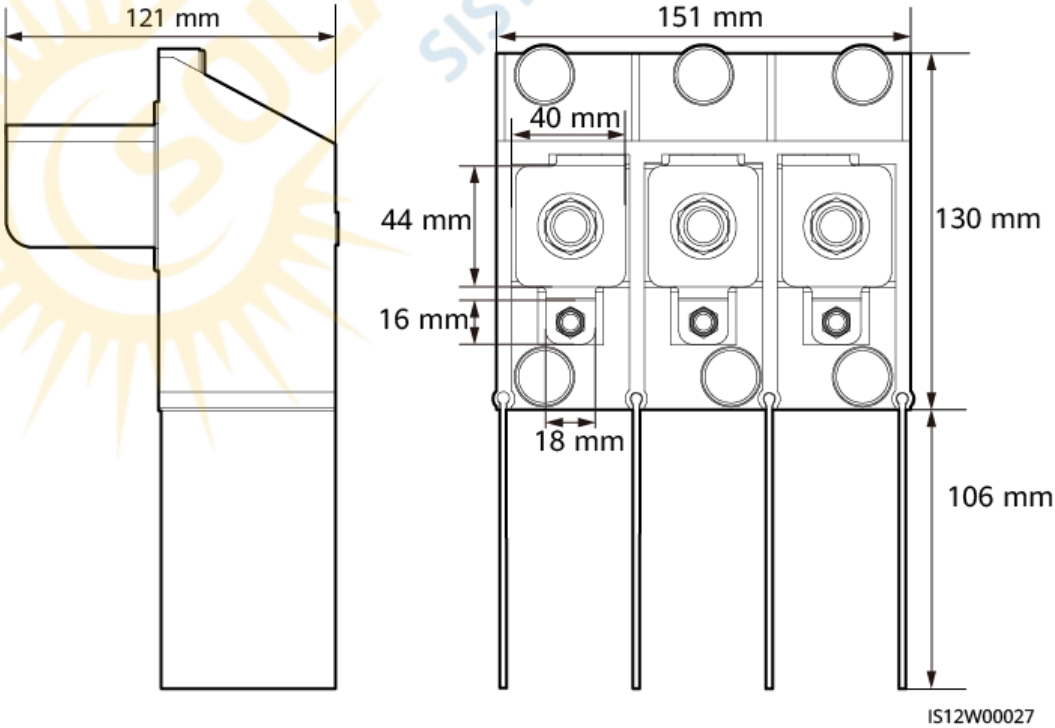

Figure 5-15 AC terminal block dimensions of 4-pin models

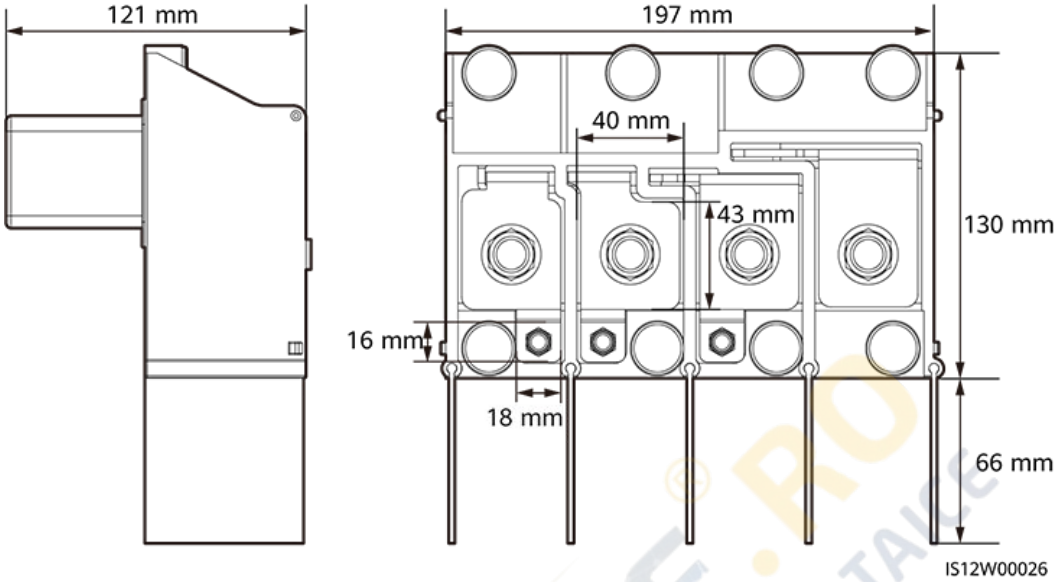

NOTE

This section describes how to install an AC output power cable for the 3-pin model.

Procedure

Step 1 Prepare a cable.

Step 2 Remove rubber rings according to the cable diameter range.

Step 3 Secure the AC output power cable and PE cable.

Step 4 Install the support bar.

Step 5 Close the maintenance compartment door and tighten the two screws on the door.

NOTICE

- Sufficient slack should be provided in the PE cable to ensure that the last cable bearing the force is the PE cable when the AC output power cable bears pulling force due to force majeure.
- The cable outer diameter can be measured using the ruler sticker in the maintenance compartment.
- Ensure that the cable jacket is in the maintenance compartment.
- Ensure that the AC output power cable is secured. Failing to do so may cause the solar inverter to malfunction or damage to its terminal block by issues such as overheating.
- Before closing the maintenance compartment door, check that the cables are connected correctly and securely, and clean up the foreign matter from the maintenance compartment.
- If a screw on the maintenance compartment door is lost, obtain the spare screw from the fitting bag tied at the bottom of the maintenance compartment.

Figure 5-16 Multi-core cable connections

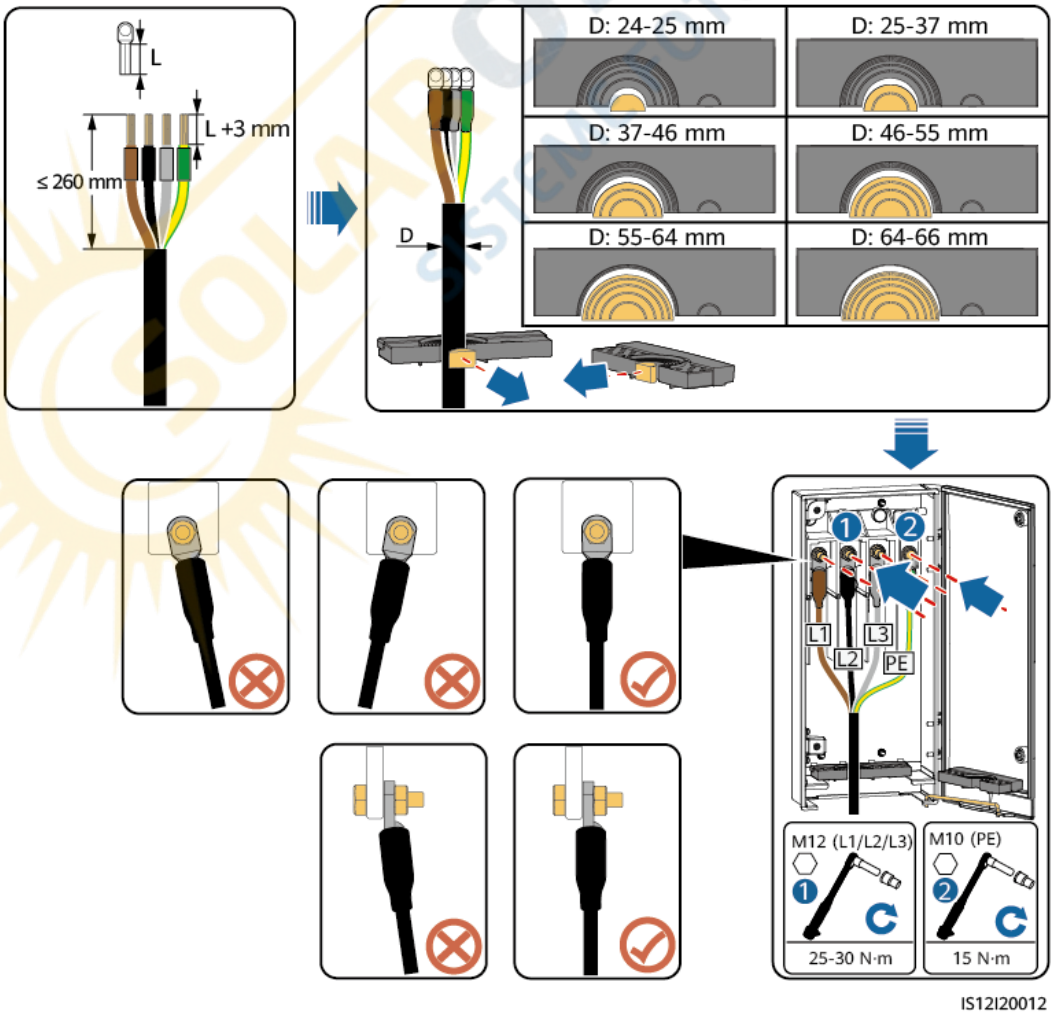

Copyright © Huawei Technologies Co., Ltd.

Figure 5-17 Single-core cable connections

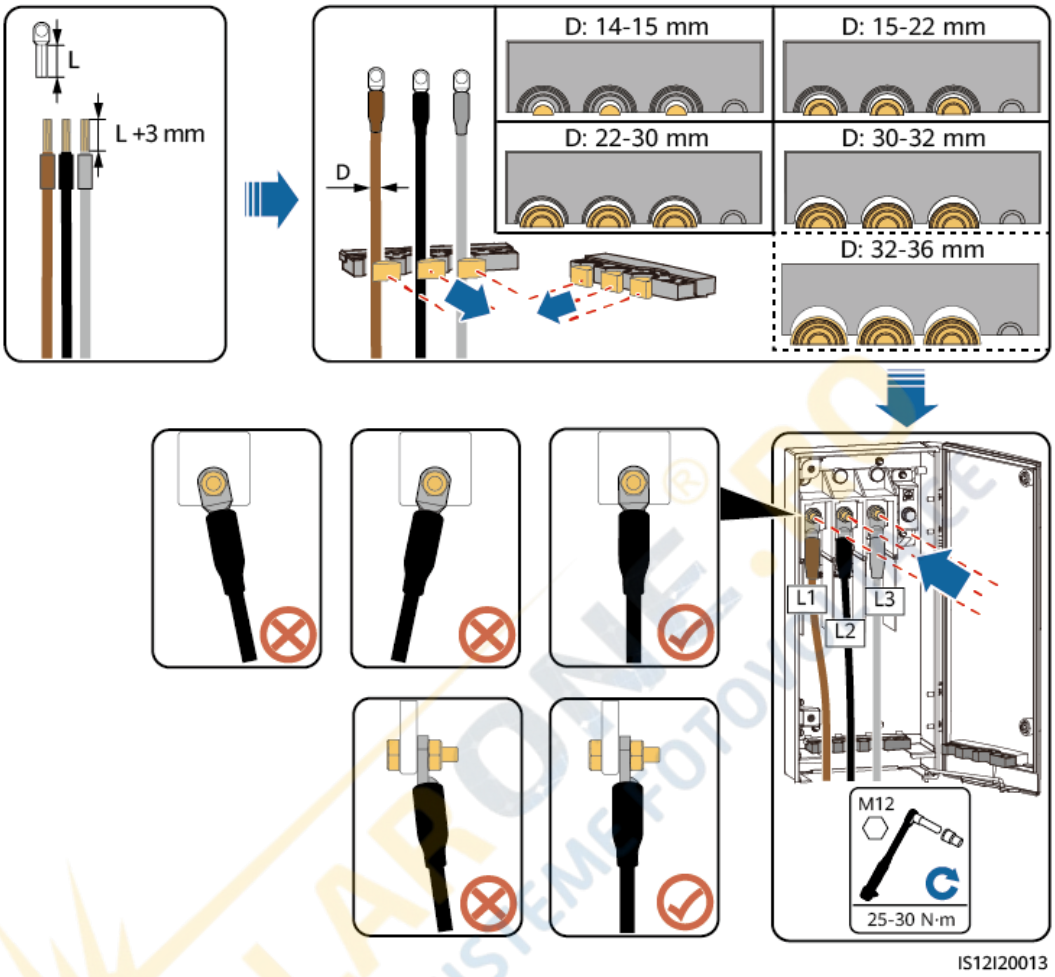

NOTE

The 32–36 mm cable is supported only by some models. Refer to the corresponding label to get the supported size.

Figure 5-18 3-pin model (125KTL) cable connections

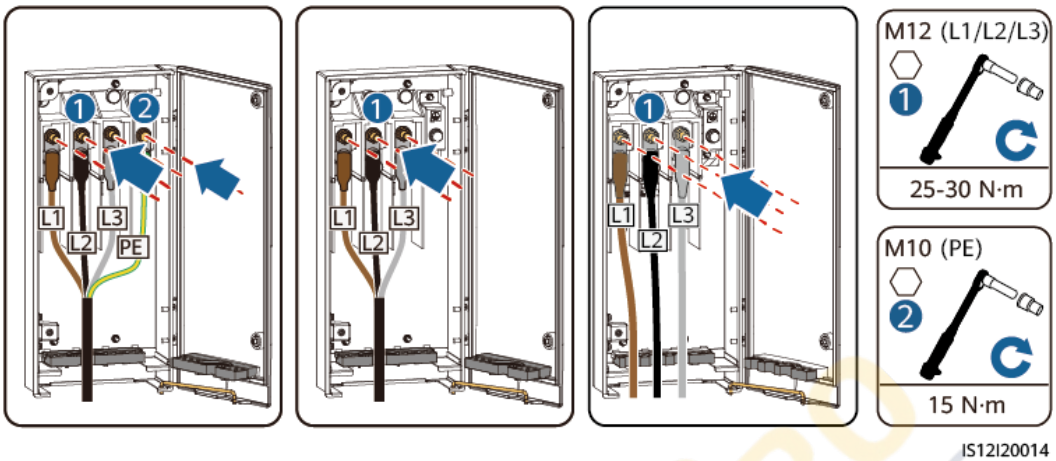

(A) Four-core cable (B) Three-core cable (C) Single-core cable

Figure 5-19 4-pin model (75KTL/100KTL/110KTL) cable connections

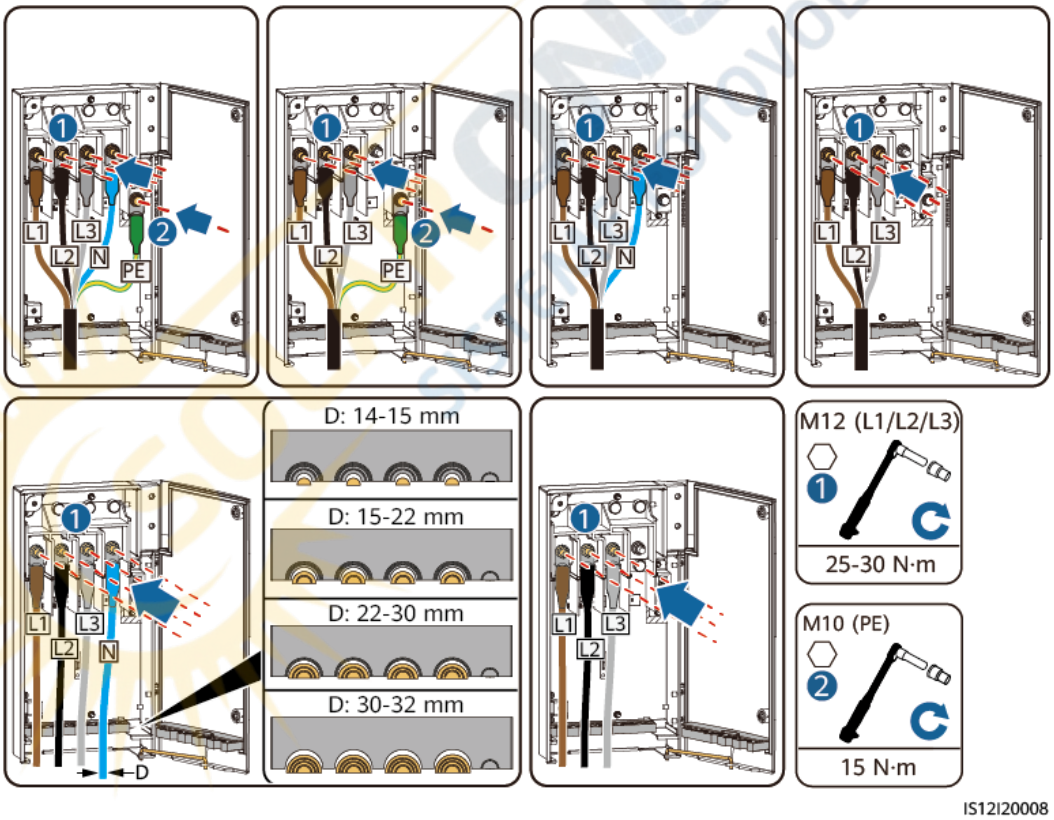

(A) Five-core cable (B) Four-core cable (including the PE cable) (C) Four-core cable (including the neutral wire)

(D) Three-core cable (E) Single-core cable (including the neutral wire) (F) Single-core cable (excluding the neutral wire)

 Copyright © Huawei Technologies Co., Ltd.

NOTE

The cable colors shown in figures are for reference only. Select an appropriate cable according to the local standards.

Figure 5-20 Closing the Maintenance Compartment Door

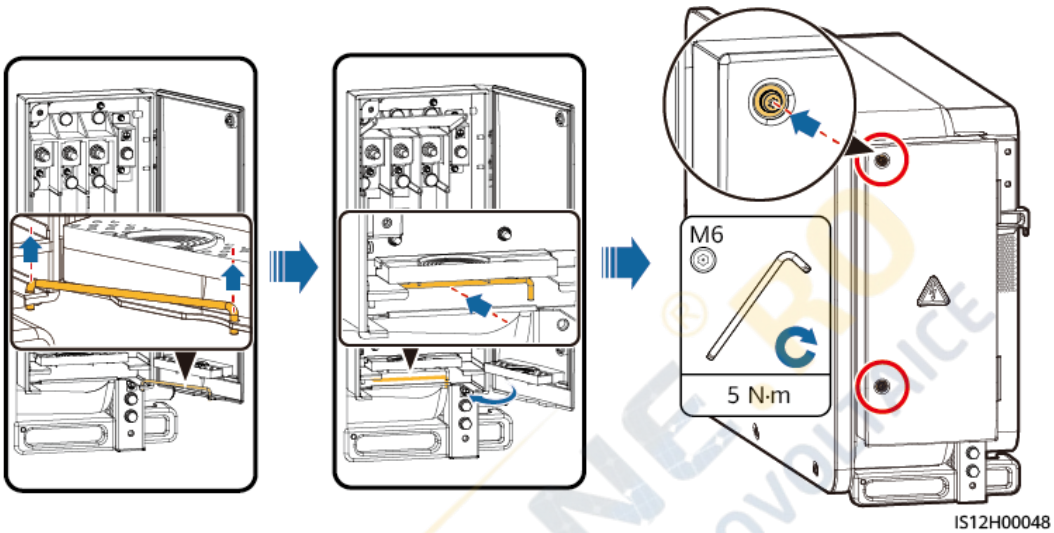

----End

5.7 Connecting DC Input Power Cables

CAUTION

Two models of PV connectors are delivered with the device: Amphenol Helios H4 and Staubli MC4. PV connectors of different models cannot be used together. Device damage caused by mixed use of different PV connectors is not covered by the warranty.

- For details about using Amphenol Helios H4 PV connectors, see **5.7.2 Connecting Cables to Amphenol Helios H4 Connectors**.
- For details about using Staubli MC4 PV connectors, see **5.7.3 Connecting Cables to Staubli MC4 Connectors**.

 Copyright © Huawei Technologies Co., Ltd.

5.7.1 Cable Connection Description

Precautions

DANGER

- Before connecting the DC input power cable, ensure that the DC voltage is within the safe range (lower than 60 V DC) and that the three DC switches on the solar inverter are set to OFF. Failing to do so may result in electric shocks.
- If you turn a DC SWITCH to ON by mistake when connecting or disconnecting DC input power cables, do not remove or insert DC input terminals. If you need to remove or insert a DC input terminal, perform the operations provided in **8.2 Power-Off for Troubleshooting**.
- When the solar inverter operates in grid-tied mode, do not perform maintenance or operations on the DC circuit, such as connecting or disconnecting a PV string or a PV module in the PV string. Failing to do so may cause electric shocks or arcing, which may also cause fire.

WARNING

Ensure that the following conditions are met. Otherwise, the solar inverter may be damaged, or even a fire could happen.

- According to IEC 62548, the maximum open-circuit voltage of each PV string cannot exceed 1100 V DC at the lowest average annual dry-bulb temperature.
- The polarities of electric connections are correct on the DC input side. The positive and negative terminals of a PV module connect to corresponding positive and negative DC input terminals of the solar inverter.

NOTICE

- Ensure that the PV module output is well insulated to ground.
- The PV strings connecting to the same MPPT circuit should contain the same number of identical PV modules.
- The solar inverter does not support full parallel connection for PV strings (full parallel connection: PV strings connect to one another in parallel outside the solar inverter and then connect to the solar inverter separately).
- During the installation of PV strings and the solar inverter, the positive or negative terminals of PV strings may be short-circuited to ground if the power cable is not properly installed or routed. In this case, an AC or DC short circuit may occur and damage the solar inverter. The caused device damage is not covered under any warranty.

 Copyright © Huawei Technologies Co., Ltd.

Terminal Description

The solar inverter has 20 DC input terminals. DC SWITCH 1 controls PV1–PV8 (MPPT1–MPPT4), DC SWITCH 2 controls PV9–PV14 (MPPT5–MPPT7), and DC SWITCH 3 controls PV15–PV20 (MPPT8–MPPT10).

Figure 5-21 DC terminals

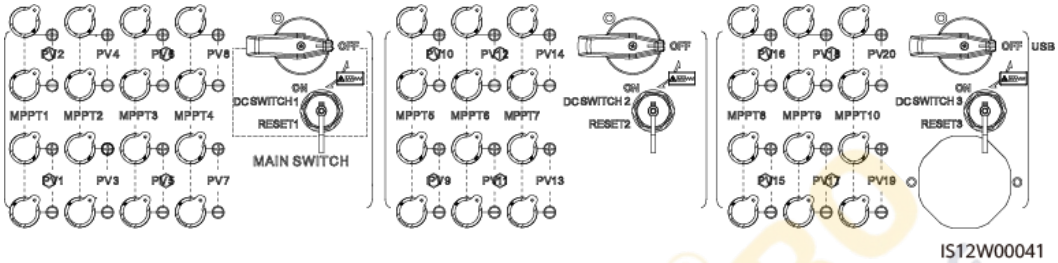

When the DC input is not fully configured, the DC input terminals must meet the following requirements:

1. Evenly distribute the DC input power cables on the DC input terminals controlled by the three DC switches. DC SWITCH 1 is preferred.
2. The even-numbered PV terminals are preferred to maximize the connections of MPPTs.
3. If the number of PV inputs is 11 to 19, connect cables to the odd-numbered PV terminals from PV1 and PV19, and avoid connections to adjacent MPPTs if possible.

If the number of PV inputs is 11 to 19, the DC input terminals are selected as follows.

Figure 5-22 DC input terminal connections

Number of PV Inputs	SWITCH 1				SWITCH 2			SWITCH 3		
	MPPT1	MPPT2	MPPT3	MPPT4	MPPT5	MPPT6	MPPT7	MPPT8	MPPT9	MPPT10
11	PV2	PV4	PV6	PV8	PV10	PV12	PV14	PV16	PV18	PV20
	PV1									
12	PV2	PV4	PV6	PV8	PV10	PV12	PV14	PV16	PV18	PV20
	PV1									PV19
13	PV2	PV4	PV6	PV8	PV10	PV12	PV14	PV16	PV18	PV20
	PV1		PV5							PV19
14	PV2	PV4	PV6	PV8	PV10	PV12	PV14	PV16	PV18	PV20
	PV1		PV5					PV15		PV19
15	PV2	PV4	PV6	PV8	PV10	PV12	PV14	PV16	PV18	PV20
	PV1		PV5		PV9			PV15		PV19
16	PV2	PV4	PV6	PV8	PV10	PV12	PV14	PV16	PV18	PV20
	PV1		PV5		PV9		PV13		PV17	PV19
17	PV2	PV4	PV6	PV8	PV10	PV12	PV14	PV16	PV18	PV20
	PV1	PV3		PV7	PV9		PV13		PV17	PV19
18	PV2	PV4	PV6	PV8	PV10	PV12	PV14	PV16	PV18	PV20
	PV1	PV3	PV5		PV9	PV11		PV15	PV17	PV19
19	PV2	PV4	PV6	PV8	PV10	PV12	PV14	PV16	PV18	PV20
	PV1	PV3	PV5	PV7	PV9		PV13	PV15	PV17	PV19

IS12P00012

 Copyright © Huawei Technologies Co., Ltd.

5.7.2 Connecting Cables to Amphenol Helios H4 Connectors

Specification Requirements

Cables with high rigidity, such as armored cables, are not recommended, because poor contact may be caused by the bending of cables.

CAUTION

Use the Amphenol Helios H4 connectors delivered with the solar inverter. If the PV connectors are lost or damaged, purchase the connectors of the same model. The device damage caused by incompatible PV connectors is beyond the warranty scope.

Procedure

Step 1 Prepare the DC input power cables.

Step 2 Crimp positive and negative metal contacts.

Step 3 Insert the contacts into the corresponding positive and negative connectors.

Step 4 Tighten the lock nuts on the positive and negative connectors.

Step 5 Use a multimeter to measure the voltage between the positive and negative terminals of the PV string (measurement range no less than 1100 V).

- If the voltage is a negative value, the DC input polarity is incorrect and needs correction.
- If the voltage is greater than 1100 V, too many PV modules configured to the same string. Remove some PV modules.

Step 6 Use an insulation resistance tester to test the insulation resistance between the PV– cables and the ground: Add 1500 V DC voltage between the PV– cables and the ground and check the insulation resistance.

- If the insulation resistance is greater than or equal to 1 MΩ, it is normal.
- If the insulation resistance is less than 1 MΩ, troubleshoot the cable insulation.

Figure 5-23 Testing the insulation resistance

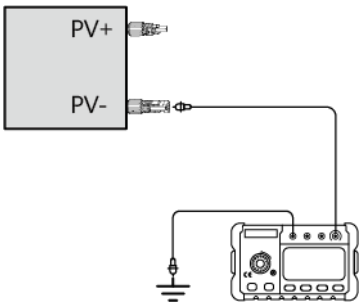

NOTE

You can use a self-made tool to connect all PV– cables together through an adapter to test the insulation resistance between all PV– cables of a device and the ground at a time.

Figure 5-24 Testing the insulation resistance between all PV– cables and the ground

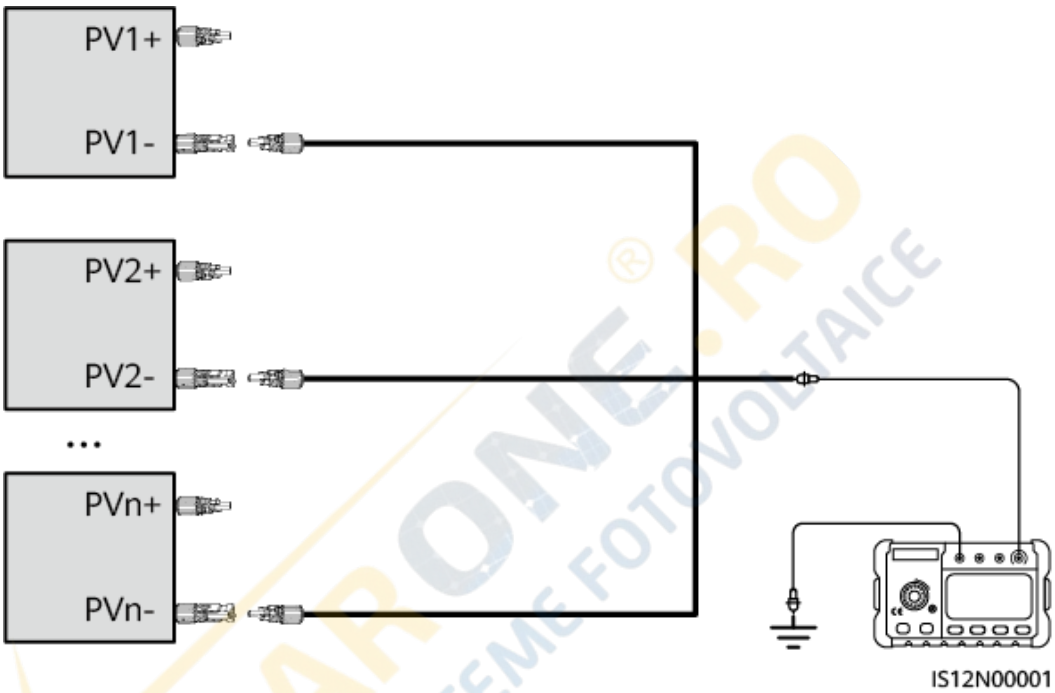

Step 7 Insert the positive and negative connectors into the corresponding DC positive and negative input terminals of the solar inverter.

Figure 5-25 Connecting DC input power cables

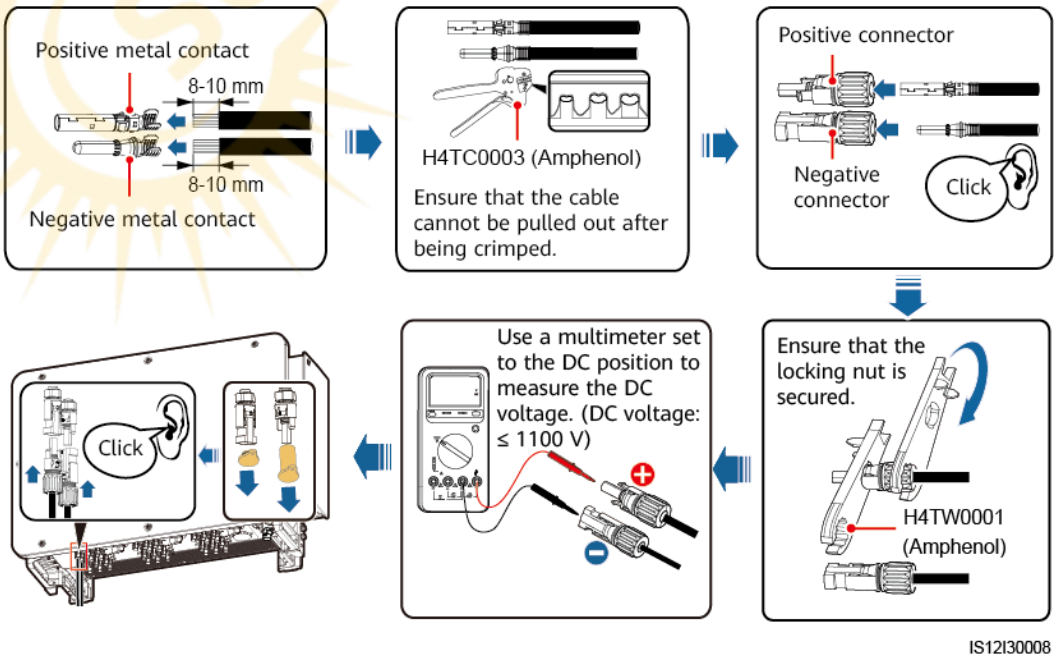

Figure 5-26 Connector connection

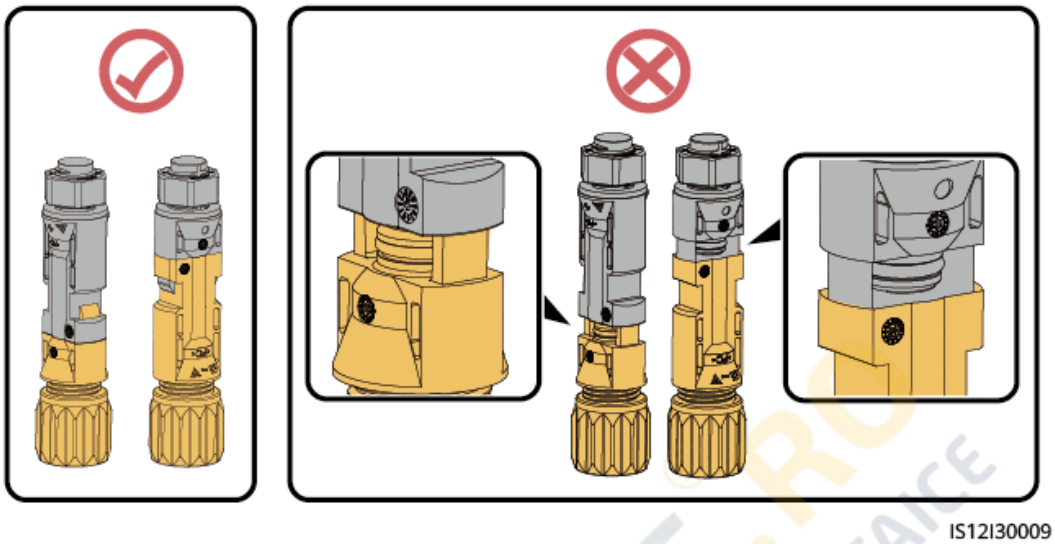

NOTICE

- If the DC input power cable is reversely connected and DC switches are set to ON, do not immediately turn off the DC switches or reconnect the positive and negative connectors. Otherwise, the device may be damaged. The caused device damage is not covered under any warranty. Wait until the solar irradiance declines at night and the PV string current reduces to below 0.5 A. Then, turn off the three DC switches, remove the positive and negative connectors, and rectify the connection of the DC input power cable.
- Connect the PV string connector to the inverter connector, and then pull back the PV string connector along the axial direction to check whether the connectors are securely connected.
- The connector must be securely connected. Damages caused by improper connection are not covered under the warranty.

Figure 5-27 DC input power cabling requirement

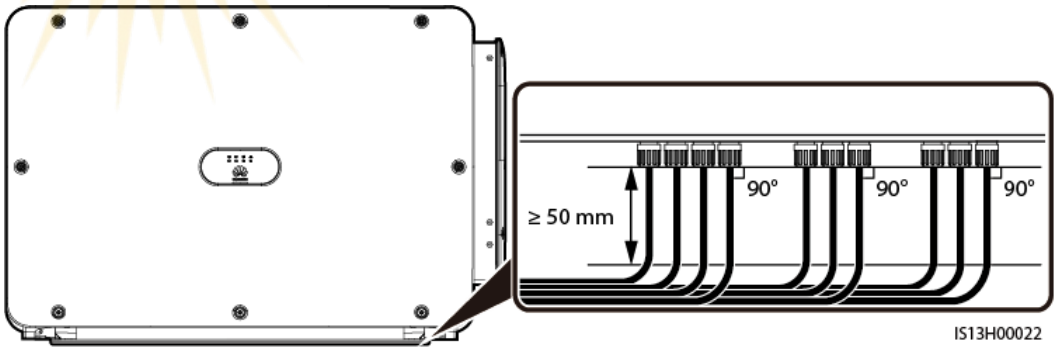

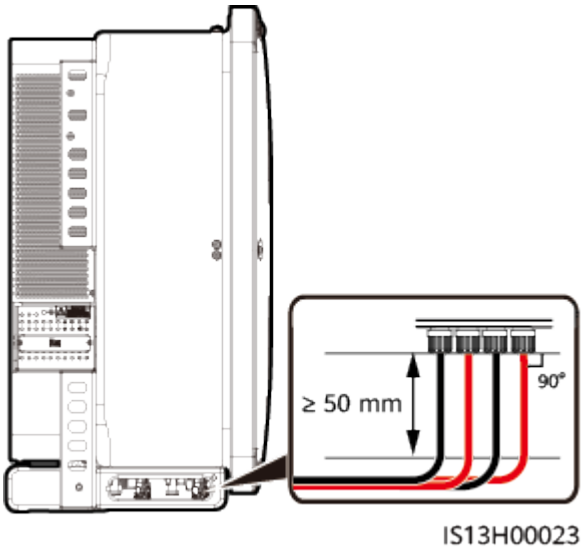

NOTICE

During DC input power cabling, leave at least 50 mm of slack. The axial tension on PV connectors must not exceed 80 N. Radial stress or torque must not be generated on PV connectors.

----End

5.7.3 Connecting Cables to Staubli MC4 Connectors

Specification Requirements

Cables with high rigidity, such as armored cables, are not recommended, because poor contact may be caused by the bending of cables.

⚠ CAUTION

Use the Staubli MC4 connectors delivered with the solar inverter. If the PV connectors are lost or damaged, purchase the connectors of the same model. The device damage caused by incompatible PV connectors is beyond the warranty scope.

Procedure

Step 1 Prepare the DC input power cables.

Step 2 Crimp positive and negative metal contacts.

Step 3 Insert the contacts into the corresponding positive and negative connectors.

Step 4 Tighten the lock nuts on the positive and negative connectors.

Step 5 Use a multimeter to measure the voltage between the positive and negative terminals of the PV string (measurement range no less than 1100 V).

- If the voltage is a negative value, the DC input polarity is incorrect and needs correction.
- If the voltage is greater than 1100 V, too many PV modules configured to the same string. Remove some PV modules.

Step 6 Use an insulation resistance tester to test the insulation resistance between the PV– cables and the ground: Add 1500 V DC voltage between the PV– cables and the ground and check the insulation resistance.

- If the insulation resistance is greater than or equal to 1 MΩ, it is normal.
- If the insulation resistance is less than 1 MΩ, troubleshoot the cable insulation.

Figure 5-28 Testing the insulation resistance

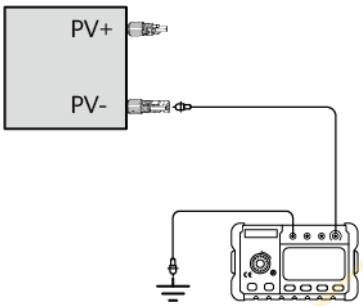

NOTE

You can use a self-made tool to connect all PV– cables together through an adapter to test the insulation resistance between all PV– cables of a device and the ground at a time.

Figure 5-29 Testing the insulation resistance between all PV– cables and the ground

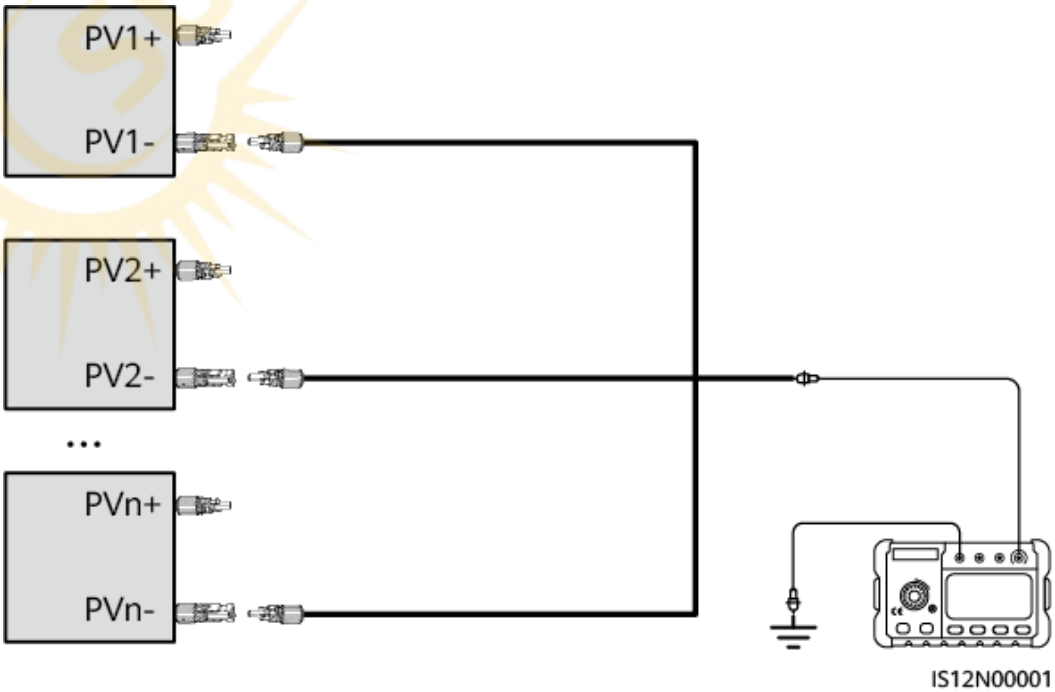

Step 7 Insert the positive and negative connectors into the corresponding DC positive and negative input terminals of the solar inverter.

Figure 5-30 Connecting DC input power cables

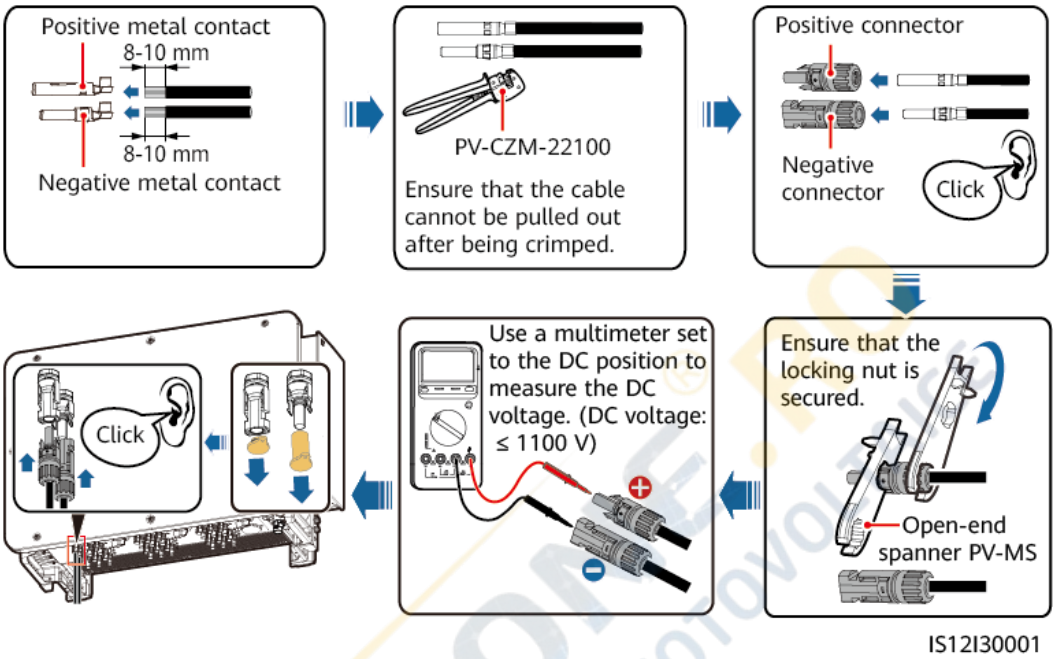

Figure 5-31 Connector connection

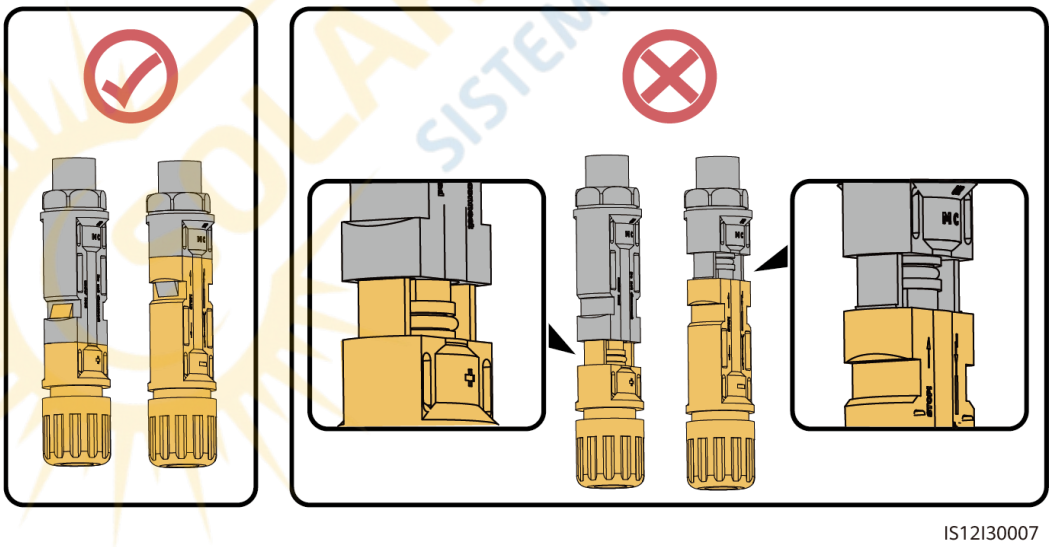

NOTICE

- If the DC input power cable is reversely connected and DC switches are set to ON, do not immediately turn off the DC switches or reconnect the positive and negative connectors. Otherwise, the device may be damaged. The caused device damage is not covered under any warranty. Wait until the solar irradiance declines at night and the PV string current reduces to below 0.5 A. Then, turn off the three DC switches, remove the positive and negative connectors, and rectify the connection of the DC input power cable.
- Connect the PV string connector to the inverter connector, and then pull back the PV string connector along the axial direction to check whether the connectors are securely connected.
- The connector must be securely connected. Damages caused by improper connection are not covered under the warranty.

Figure 5-32 DC input power cabling requirement

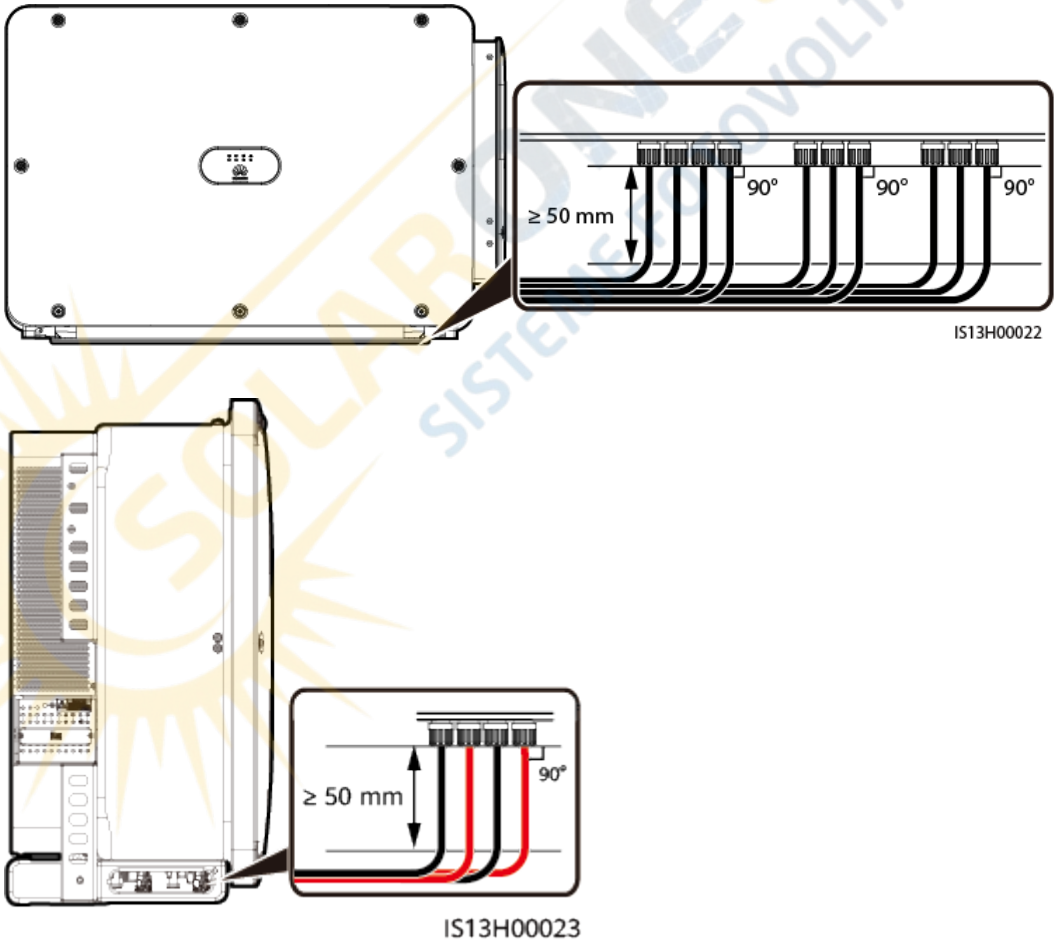

NOTICE

During DC input power cabling, leave at least 50 mm of slack. The axial tension on PV connectors must not exceed 80 N. Radial stress or torque must not be generated on PV connectors.

----End

5.8 Connecting the RS485 Communications Cables

Pin Definitions of the Communications Port

Figure 5-33 Communications port

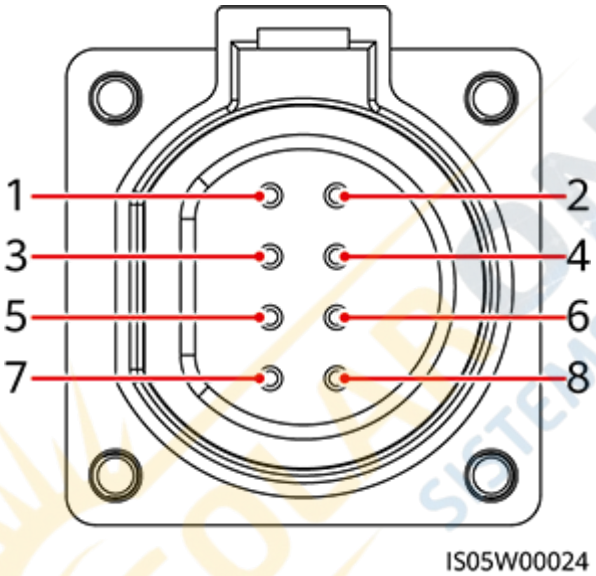

Port	Pin	Definition	Pin	Definition	Description
RS485-1	1	RS485A IN, RS485 differential signal+	2	RS485A OUT, RS485 differential signal+	Used for cascading solar inverters or connecting to devices such as the SmartLogger.
	3	RS485B IN, RS485 differential signal–	4	RS485B OUT, RS485 differential signal–	
Protection ground	5	PE, shielding ground	6	PE, shielding ground	N/A

 Copyright © Huawei Technologies Co., Ltd.

Port	Pin	Definition	Pin	Definition	Description
RS485-2	7	RS485A, RS485 differential signal+	8	RS485B, RS485 differential signal–	Used for connecting to an RS485 slave device. ● In the scenario of SDongle networking or a single solar inverter, the RS485-2 port is connected to a power meter to collect information about power at the grid-tied point for grid-tied point power control. ● In the scenario of intelligent support tracking control, the RS485-2 port is connected to the support tracking system to collect support information.

Connecting the RS485 Communications Cables

When routing the communications cable, separate it from power cables to prevent communication from being affected. Connect the shield layer to the PE point. This section describes how to connect three communications cables.

 Copyright © Huawei Technologies Co., Ltd.

Figure 5-34 Connecting RS485 communications cables (4–8 mm four-hole rubber plug)

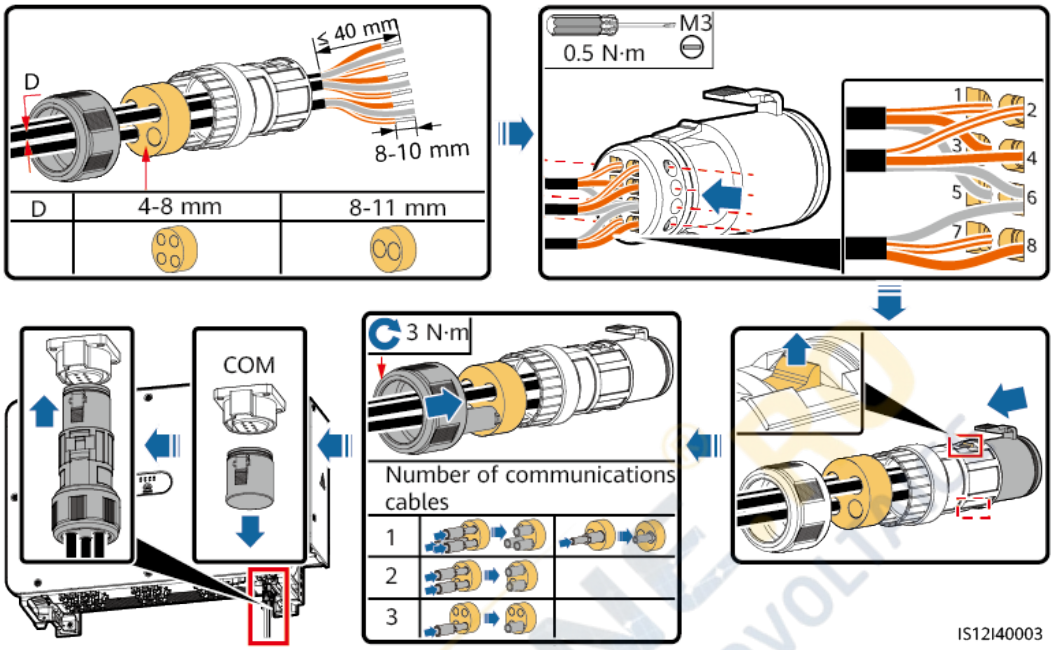

Figure 5-35 Connecting RS485 communications cables (4–8 mm two-hole or three-hole rubber plug)

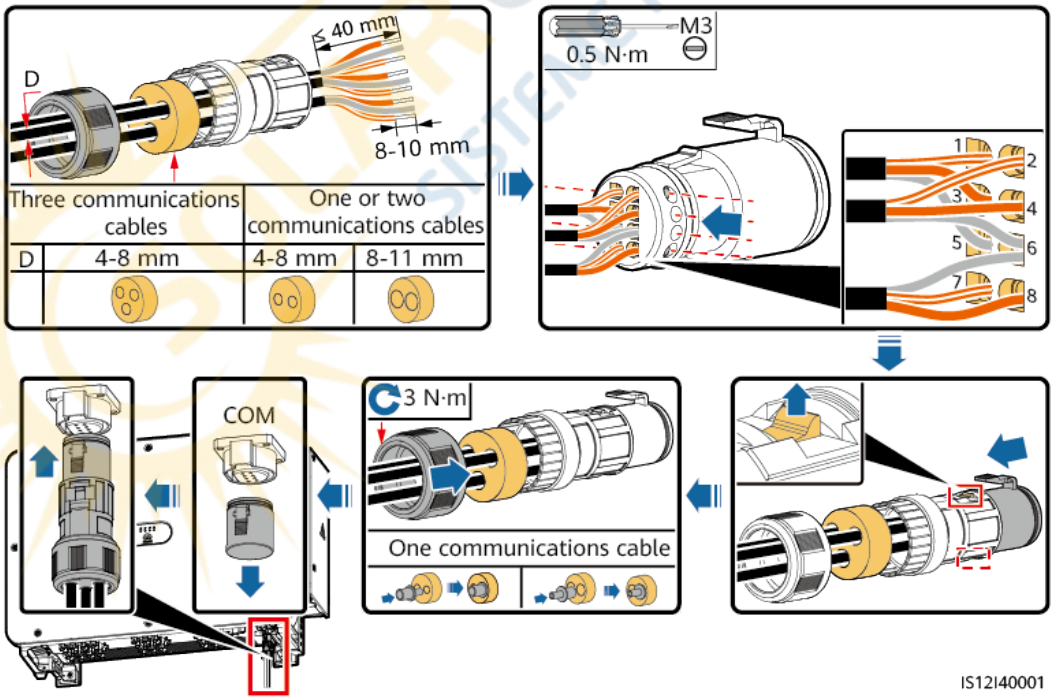

5.9 (Optional) Installing a Smart Dongle

- 4G Smart Dongle

NOTICE

- If your Smart Dongle is not equipped with a SIM card, prepare a standard SIM card (size: 25 mm x 15 mm) with the capacity greater than or equal to 64 KB.
- When installing the SIM card, determine its installation direction based on the silk screen and arrow on the card slot.
- Press the SIM card in place to lock it, indicating that the SIM card is correctly installed.
- When removing the SIM card, push it inwards to eject it.
- When reinstalling the cover of the Smart Dongle, ensure that the buckle springs back in place.

Figure 5-36 Installing a 4G Smart Dongle (SDongleA-03)

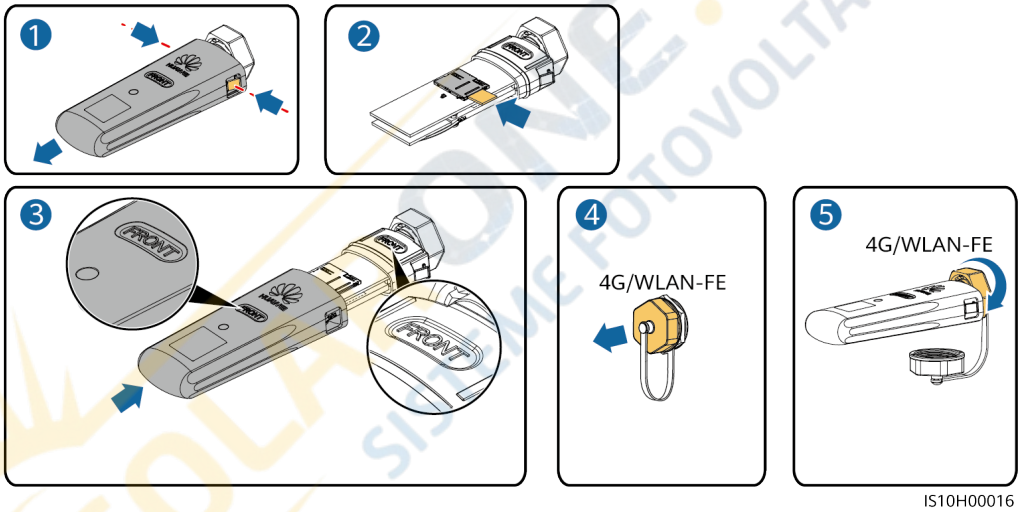

Figure 5-37 Installing a 4G Smart Dongle (SDongleB-06)

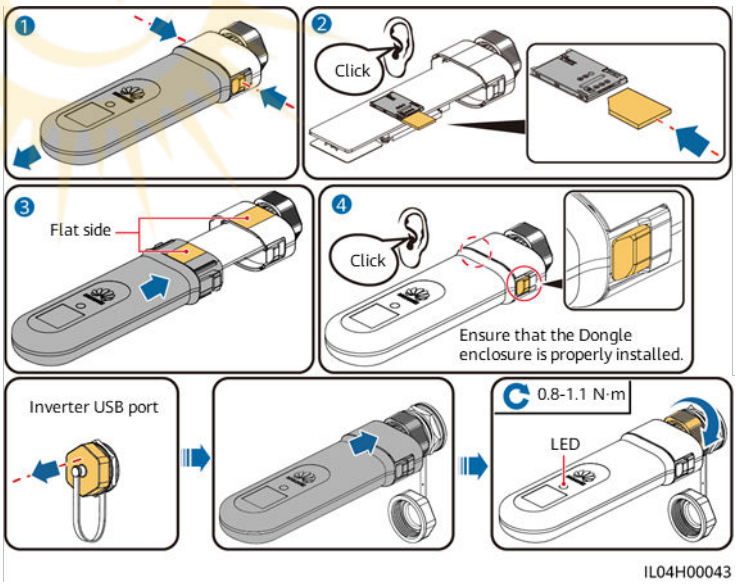

- WLAN-FE Smart Dongle (WLAN Communication)

Figure 5-38 Installing a WLAN-FE Smart Dongle (WLAN communication)

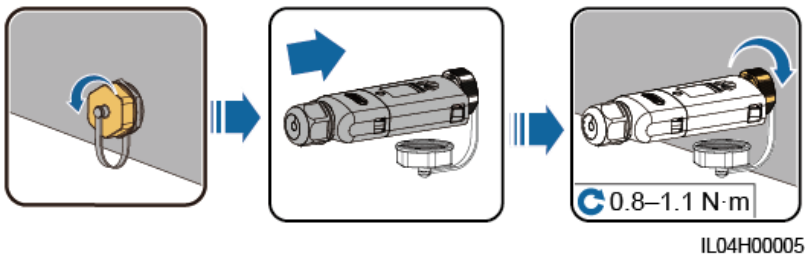

- WLAN-FE Smart Dongle (FE Communication)

Figure 5-39 Installing a WLAN-FE Smart Dongle (FE communication)

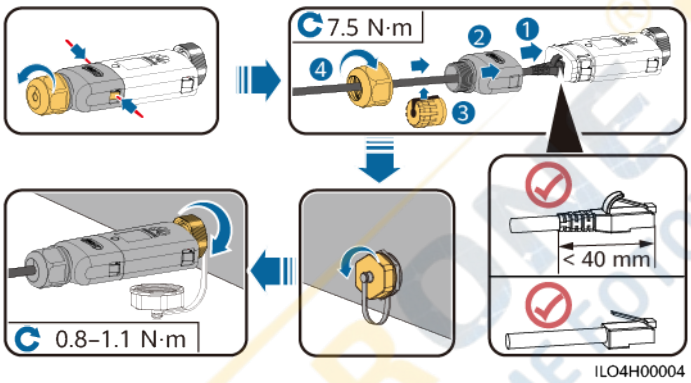

NOTICE

Install the network cable before installing the Smart Dongle on the solar inverter.

NOTE

- For details about how to operate the WLAN-FE Smart Dongle SDongleA-05, see ***SDongleA-05 Smart Dongle Quick Guide (WLAN-FE)***. You can scan the QR code below to obtain the document.
- For details about how to operate the 4G Smart Dongle SDongleA-03, see ***SDongleA-03 Quick Guide (4G)***. You can scan the QR code below to obtain the document.
- For details about how to operate the 4G Smart Dongle SDongleB-06, see ***SDongleB-06 Smart Dongle Quick Guide (4G)***. You can scan the QR code below to obtain the document.

The quick guide is delivered with the Smart Dongle.

SOLARONE.RO SISTEME FOTOVOLTAICE

6 Commissioning

Prerequisites

DANGER

- Wear personal protective equipment and use dedicated insulated tools to avoid electric shocks or short circuits.

6.1 Check Before Power-on

No.	Acceptance Criteria
1	The solar inverter is installed correctly and securely.
2	The DC switches and the downstream AC switch are OFF.
3	All cables are connected correctly and securely.
4	The installation space is proper, and the installation environment is clean and tidy.
5	The maintenance compartment door is closed and the door screws are tightened.
6	Unused DC input terminals are sealed.
7	Unused USB and RESET ports are plugged with watertight caps.

 Copyright © Huawei Technologies Co., Ltd.

6.2 Powering On the SUN2000

Precautions

DANGER

- Wear personal protective equipment and use dedicated insulated tools to avoid electric shocks or short circuits.

WARNING

When LED2 is steady green (meaning that the inverter is grid-tied), do not turn on any DC switch. Otherwise, the inverter may be damaged because the insulation resistance is not detected.

NOTICE

- Before turning on the AC switch between the SUN2000 and the power grid, use a multimeter set to the AC position to check that the AC voltage is within the specified range.
- Do not turn the DC switch to the unloaded position.
- When the system is powered on or running, do not place obstacles (such as cables) to block the rotation of the handle or manually hold the handle. Otherwise, the DC switch cannot be automatically disconnected.
- If the solar inverter has been stored for more than two years, it must be checked and tested by professionals before being put into use.

Procedure

Step 1 Turn on the AC switch between the SUN2000 and the power grid.

NOTICE

If you perform **Step 3** before **Step 1**, the SUN2000 reports a fault about abnormal shutdown. You can start the SUN2000 only after the fault is automatically rectified.

Step 2 (Optional) Remove the screws that secure DC SWITCH 1, DC SWITCH 2, and DC SWITCH 3. Store the screws properly for future power-off maintenance.

NOTE

For the model used in Australia, perform this step based on the local standards.

 Copyright © Huawei Technologies Co., Ltd.

Figure 6-1 Remove the screws

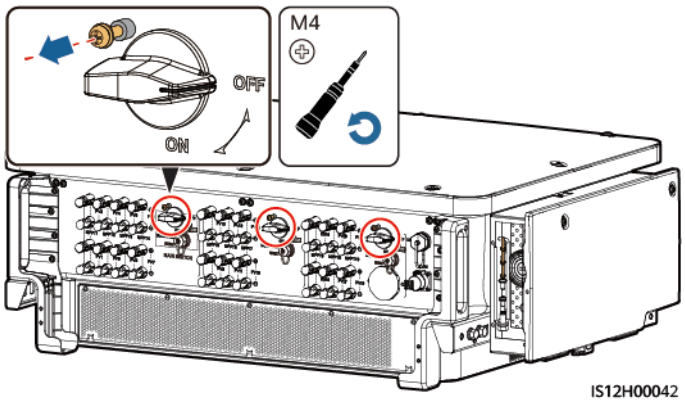

Step 3 Set DC SWITCH 1 (MAIN SWITCH) at the bottom of the solar inverter chassis to ON. When you hear a click, the switch is ON.

Step 4 Check the status of the PV connection indicator. If it is steady green, set DC SWITCH 2 and DC SWITCH 3 to ON.

Step 5 Observe the LED indicators to check the SUN2000 operating status.

Step 6 Perform quick settings on the SUN2000 app. For details, see **7.1 Operations with the SUN2000 App**.

----End

7 Man-Machine Interactions

7.1 Operations with the SUN2000 App

7.1.1 App Introduction

Functions

- The FusionSolar app is recommended when the SUN2000 is connected to the FusionSolar hosting cloud. The SUN2000 app is recommended when the SUN2000 is connected to other management systems.
- The SUN2000 or FusionSolar app (app for short) is a mobile phone app that communicates with the SUN2000 over a WLAN/Bluetooth module or a USB data cable to allow for querying alarms, setting parameters, and performing routine maintenance as an easy-to-use maintenance platform.

Connection Mode

After the DC or AC side of the SUN2000 is powered on, you can connect the app to it through a WLAN module, a Bluetooth module or a USB data cable.

NOTICE

- Over a WLAN module: The USB-Adapter2000-C WLAN module is supported.
- Over a Bluetooth module: The USB-Adapter2000-B Bluetooth module is supported.
- Over a USB data cable: The USB 2.0 port is supported. Use the USB data cable delivered with the mobile phone.
- Mobile phone operating system: Android 4.0 or later.
- Recommended phone brands: Huawei and Samsung.

 Copyright © Huawei Technologies Co., Ltd.

Figure 7-1 Connection over a WLAN module or a Bluetooth module

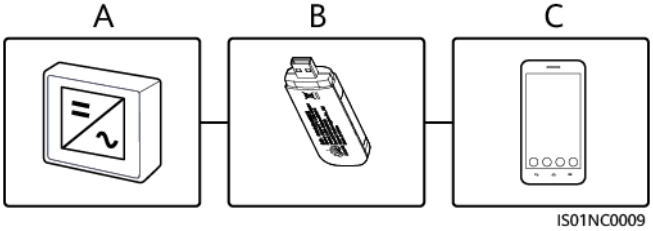

(A) SUN2000 (B) WLAN module or Bluetooth module (C) Mobile phone

Figure 7-2 Connection over a USB data cable

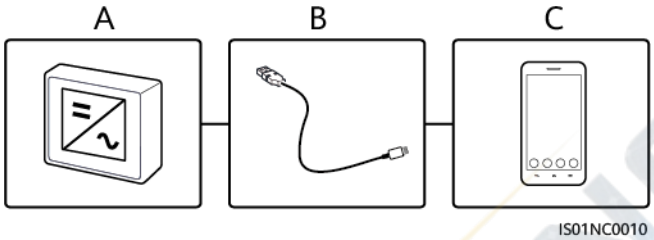

(A) SUN2000 (B) USB data cable (C) Mobile phone

Disclaimer

NOTICE

- The configurable parameters of the SUN2000 vary with the device model and grid code.
- If you change the grid code, some parameters may be restored to factory defaults. After the grid code is changed, check whether the previously set parameters are affected.
- Delivering a reset, factory reset, shutdown, or upgrade command to the solar inverters may cause power grid connection failure, which affects the energy yield.
- Only professionals are allowed to set the grid parameters, protection parameters, feature parameters, and power adjustment parameters of the solar inverters. If the grid parameters, protection parameters, and feature parameters are incorrectly set, the solar inverters may not connect to the power grid. If the power adjustment parameters are incorrectly set, the solar inverters may not connect to the power grid as required. In these cases, the energy yield will be affected.
- The parameter names, value ranges, and default values are subject to change.

7.1.2 Downloading and Installing the App

- FusionSolar app: Scan the QR code and download the latest installation package.

- SUN2000 app: Log in to Huawei AppGallery (https://appstore.huawei.com), search for **SUN2000**, and download the app installation package. You can also scan the QR code to download the installation package.

QR code:

FusionSolar SUN2000 (Android) SUN2000 (iOS)

7.1.3 Logging In to the App

Prerequisites

- The DC or AC side of the SUN2000 has been energized.
- Connection over a WLAN module or a Bluetooth module:
  a. The WLAN module or Bluetooth module is connected to the **USB** port at the bottom of the SUN2000.
  b. The WLAN or Bluetooth function is enabled.
  c. Keep the mobile phone within 5 m from the SUN2000. Otherwise, the communication between them would be affected.
- Connection over a USB cable:
  a. The USB data cable is connected from the USB port at the bottom of the SUN2000 to the port on the mobile phone.
  b. If the USB data cable is successfully connected, the message **Connected to USB Accessory** will pop up on the phone. Otherwise, the cable is not connected.

Procedure

1. Run the app and select a connection mode.

NOTE

- When the WLAN connection is used, scan the QR code of the WLAN module to access the login screen.
- When the WLAN connection is used, the initial name of the WLAN hotspot is **Adapter-WLAN module SN**, and the initial password is **Changeme**. Use the initial password upon first power-on and change it immediately after login. To ensure account security, change the password periodically and keep the new password in mind. Not changing the initial password may cause password disclosure. A password left unchanged for a long period of time may be stolen or cracked. If a password is lost, devices cannot be accessed. In these cases, the user is liable for any loss caused to the PV plant.
- When the Bluetooth connection is used, the connected Bluetooth device is named after **last 8 digits of the SN barcode+HWAPP**.
- After you select **Use by default for this USB accessory**, a message that asks you to confirm the USB access will not appear if you log in to the app again without removing the USB data cable.

a. (Scenario in which the SUN2000 is connected to the FusionSolar hosting cloud) Run the FusionSolar app and access the **Device Commissioning** screen.

Figure 7-3 Selecting a connection mode (with network access)

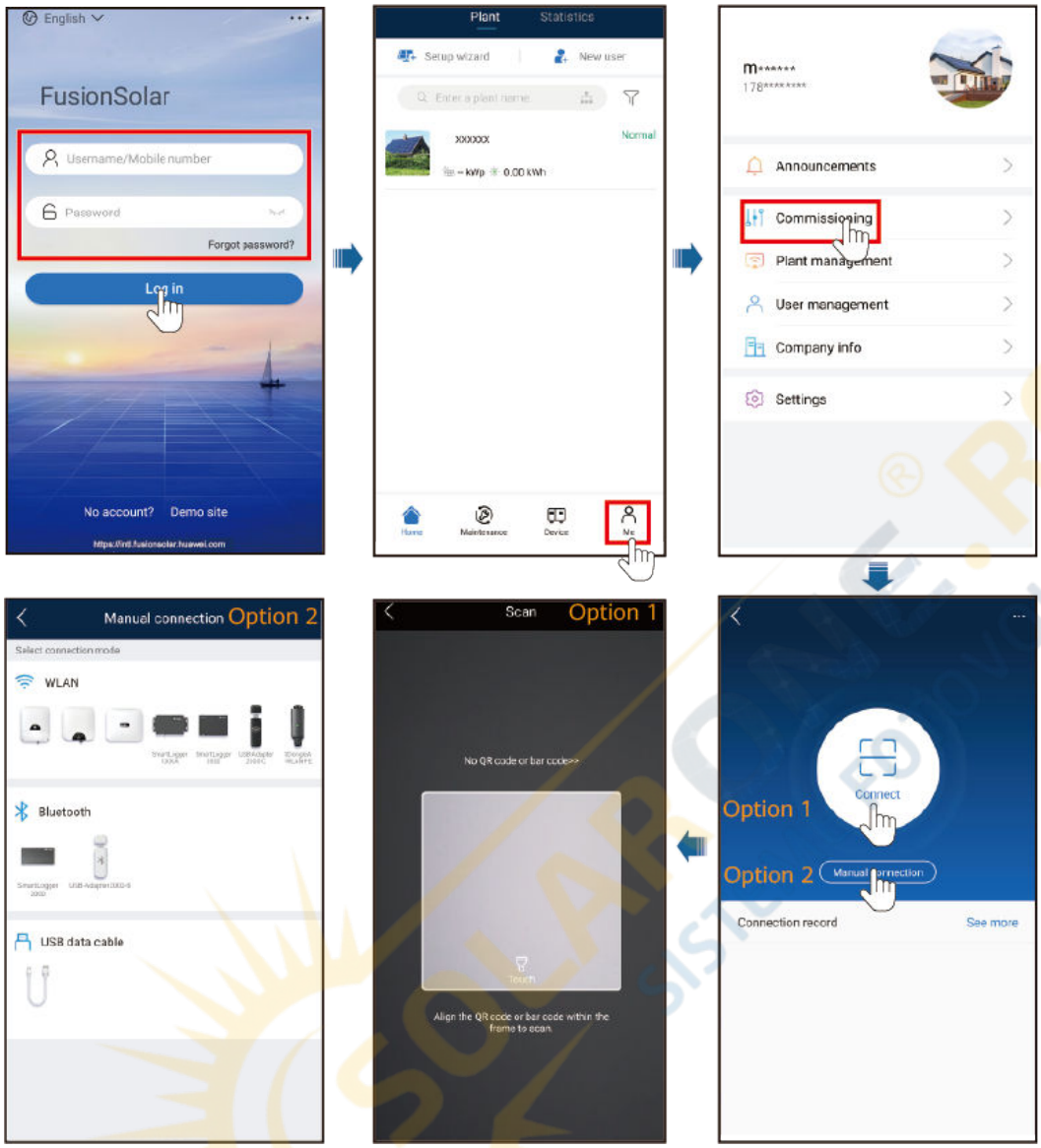

Figure 7-4 Selecting a connection mode (without network access)

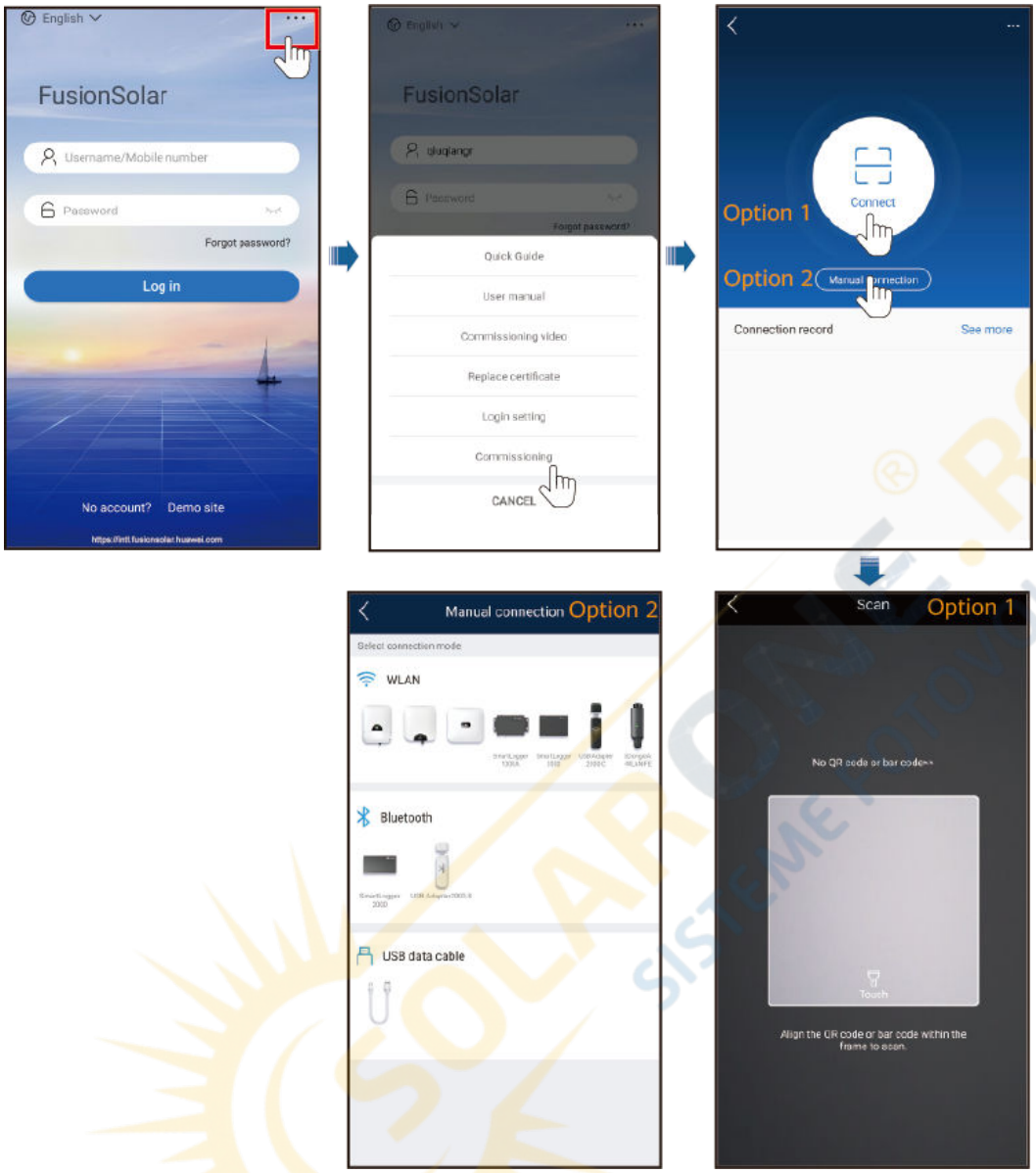

b. (Scenario in which the SUN2000 is connected to other management systems) Run the SUN2000 app and access the operation screen.

Figure 7-5 Selecting a connection method

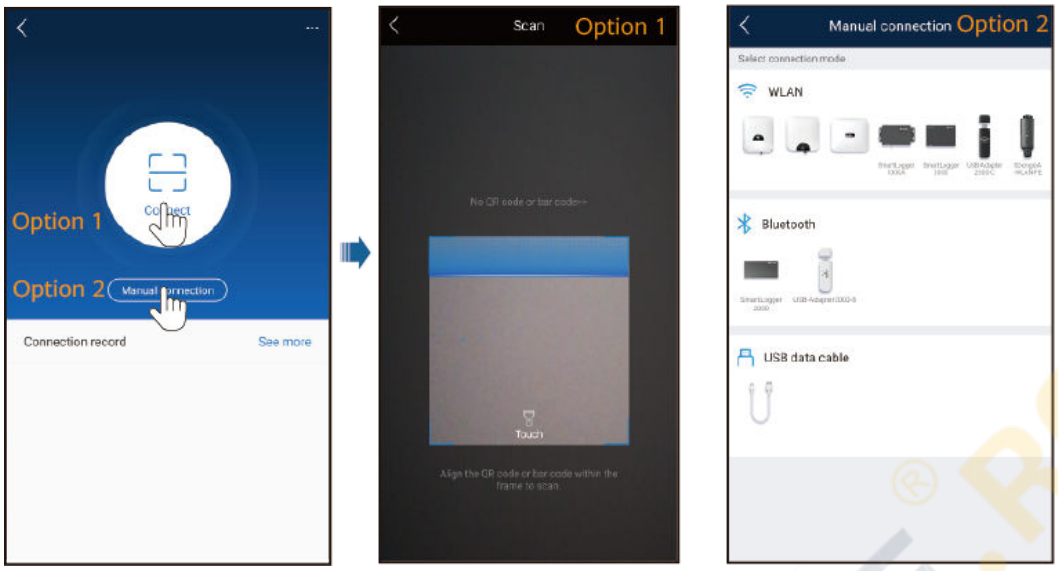

2. Select a login user and enter the login password to access the quick settings screen or the main menu screen.

NOTE

- Some models have two different login screens. The actual login screen may vary.
- For details about the permissions of an installer user, see those of advanced and special users. The following parameter settings use advanced and special users as examples.

– The login user is a **Common User**, **Advanced User**, or **Special User**.

NOTICE

- The SUN2000 app version must be 3.2.00.013 (Android) or later, and the FusionSolar app version must be 5.7.008 (Android) or later. The screenshots are for reference only. The actual screens may vary.
- The login password is the same as that for the SUN2000 connected to the app and is used only when the SUN2000 connects to the app.
- The initial passwords for **Common User**, **Advanced User**, and **Special User** are all **00000a**.
- Use the initial password upon first power-on and change it immediately after login. To ensure account security, change the password periodically and keep the new password in mind. Not changing the initial password may cause password disclosure. A password left unchanged for a long period of time may be stolen or cracked. If a password is lost, devices cannot be accessed. In these cases, the user is liable for any loss caused to the PV plant.
- During the login, if five consecutive invalid password entries are made (the interval between two consecutive entries is less than 2 minutes), the account will be locked for 10 minutes. The password should consist of six characters.
- If you log in to the app after the device connects to the app for the first time or factory defaults are restored, the quick settings screen will be displayed. Set basic parameters as prompted. If you do not set basic parameters for the inverter on the quick settings screen, the screen is still displayed when you log in to the app next time.
- To set SUN2000 basic parameters on the quick settings screen, switch to **Advanced User**. If you log in as **Common User** or **Special User**, enter the password of the advanced user to access the **Quick Settings** screen.

Figure 7-6 Login

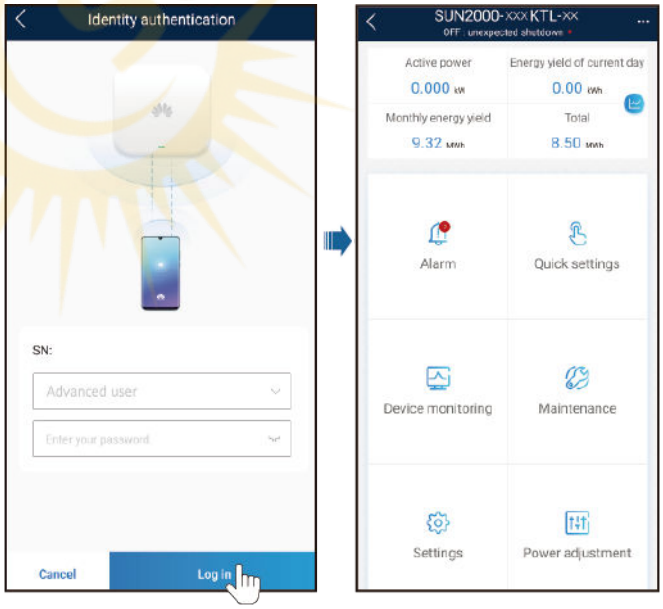

– The login user is an **Installer** user.

NOTICE

- The SUN2000 app version must be 6.22.10.117 (Android) or later, and the FusionSolar app version must be 6.22.10.117 (Android) or later. The screenshots are for reference only. The actual screens may vary.
- When you log in to the system for the first time, set the login password. To ensure account security, protect the password by changing it periodically, and keep it secure. Your password might be stolen or cracked if it is left unchanged for extended periods. If a password is lost, devices cannot be accessed. In these cases, the Company shall not be liable for any loss caused to the plant.
- You will be locked out for 10 minutes after five consecutive failed password attempts (the interval between two consecutive entries is less than 2 minutes).
- If you log in to the app after the device connects to the app for the first time or factory defaults are restored, the quick settings screen will be displayed. Set basic parameters as prompted. If you do not set basic parameters for the inverter on the quick settings screen, the screen is still displayed when you log in to the app next time.
- If the device has been connected to the SmartLogger, the quick settings screen is not automatically displayed when the device is connected to the app.
- Set the correct grid code based on the application area and scenario of the solar inverter.

 Copyright © Huawei Technologies Co., Ltd.

Figure 7-7 Login

7.1.4 Operations Related to the Advanced User

Ensure that the DC side of the SUN2000 is energized before setting grid parameters, protection parameters, and feature parameters.

7.1.4.1 Setting Grid Parameters

Procedure

Step 1 Choose **Settings** > **Grid parameters** to set grid parameters.

Figure 7-8 Grid parameters

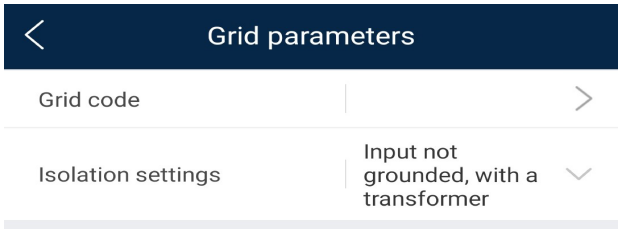

Table 7-1 Grid parameters

Parameter	Description
Grid Code	Set this parameter based on the grid code of the country or region where the inverter is used and the inverter application scenario.
Isolation settings	Set the working mode of the inverter based on the grounding status at DC side and the connection to the power grid.

----End

7.1.4.2 Setting Protection Parameters

Procedure

Step 1 Choose **Settings** > **Protection parameters** to set protection parameters.

Figure 7-9 Protection parameters

Table 7-2 Protection parameters

Parameter	Description
Insulation resistance protection threshold (MΩ)	To ensure device safety, the SUN2000 detects the insulation resistance between the input side and the ground when it starts a self-check. If the detected value is less than the preset value, the SUN2000 does not export power to the power grid.

----End

7.1.4.3 Setting Feature Parameters

Procedure

Step 1 Choose **Settings** > **Feature Parameters**, and set feature parameters.

Figure 7-10 Feature parameters

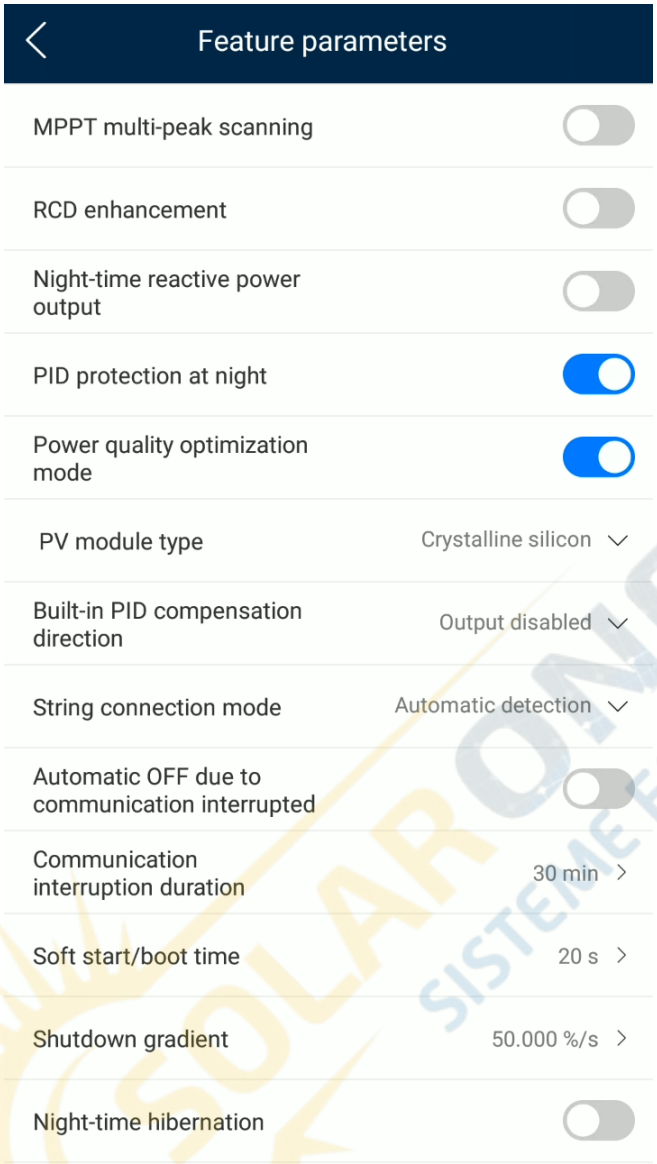

Table 7-3 Feature parameters

Parameter	Description
MPPT multi-peak scanning	When the inverter is used in scenarios where PV strings are greatly shaded, set this parameter to **Enable**, and then the inverter will perform MPPT scanning at regular intervals to locate the maximum power.
MPPT multi-peak scan interval (min)	Specifies the MPPT scanning interval. This parameter is displayed when **MPPT multi-peak scanning** is set to **Enable**.

Parameter	Description
RCD enhancement	RCD refers to the residual current of the inverter to the ground. To ensure device and personal safety, RCD should be limited to the specified value in the standard. If an AC switch with a residual current detection function is installed outside the inverter, this function should be enabled to reduce the residual current generated when the inverter is running, thereby preventing the AC switch from misoperations.
Night-time reactive power output	In some specific application scenarios, a power grid company requires that the inverter can perform reactive power compensation at night to ensure that the power factor of the local power grid meets requirements. This parameter is displayed when **Isolation settings** is set to **Input ungrounded, with TF**.
PID protection at night	When the inverter outputs reactive power at night and this parameter is set to **Enable**, the inverter will shut down automatically if it detects abnormal status of the PID compensation.
Power quality optimization mode	If this parameter is set to **Enable**, the inverter output current harmonics will be optimized.
PV module type	This parameter is used to set different types of PV modules and the shutdown time of the concentration PV module. If the concentration PV modules are shaded, the power drops drastically to 0 and the inverter shuts down. The energy yield would be affected since it takes too long for the power to resume and inverter to restart. The parameter does not need to be set for crystalline silicon and filmy PV modules. ● If this parameter is set to **Crystalline silicon** or **Film**, the inverter automatically detects the power of PV modules when they are shaded and shuts down if the power is too low. ● When concentration PV modules are used: – If this parameter is set to **CPV 1**, the inverter can quickly restart in 60 minutes if the input power of PV modules drops drastically due to shading. – If this parameter is set to **CPV 2**, the inverter can quickly restart in 10 minutes if the input power of PV modules drops drastically due to shading.
Built-in PID compensation direction	When the external PID module compensates the PID voltage for the PV system, set **Built-in PID compensation direction** to the actual compensation direction of the PID module so that the inverter can output reactive power at night. This parameter is displayed when **PV module type** is set to **Crystalline silicon**. Select **PV–positive offset** for P-type PV modules. Select **PV+ negative offset** for N-type PV modules.

 Copyright © Huawei Technologies Co., Ltd.

Parameter	Description
String connection mode	Specifies the connection mode of PV strings. ● When PV strings connect to the inverter separately (All PV strings separated), there is no need to set this parameter. The inverter can automatically detect the connection mode of the PV strings. ● When PV strings connect to one another in parallel outside the inverter and then connect to it independently (All PV strings connected), set this parameter to **All PV strings connected**.
Automatic OFF due to communication interrupted	The standards of certain countries and regions require that the inverter must shut down after the communication is interrupted for a certain time. If **Automatic OFF due to communication interrupted** is set to **Enable** and the inverter communication is interrupted for a specified time (set by **Communication interruption duration**), the inverter will automatically shut down.
Automatic ON due to communication resumed	If this parameter is set to **Enable**, the inverter automatically starts after communication recovers. If this parameter is set to **Disable**, the inverter needs to be started manually after communication recovers. This parameter is displayed when **Automatic OFF due to communication interrupted** is set to **Enable**.
Communication interruption duration (min)	Specifies the duration for determining communication interruption. Used for automatic shutdown for protection in case of communication interruption.
Soft start/boot time (s)	Specifies the duration for the power to gradually increase when the inverter starts.
Shutdown gradient (%/s)	Specifies the power change speed when the inverter shuts down.
Night-time hibernation	The inverter monitors PV strings at night. If this parameter is set to **Enable**, the monitoring function of the inverter will hibernate at night to reduce power consumption.
MBUS communication	For inverters that support RS485 communication and MBUS communication, you are advised to set this parameter to **Disable** to reduce power consumption.
Delay upgrade	This parameter is mainly used in the upgrade scenarios where the PV power supply is disconnected at night due to no sunlight or unstable at dawn or dusk due to poor sunlight. After the inverter starts to upgrade, if **Delay upgrade** is set to **Enable**, the upgrade package is loaded first. After the PV power supply recovers and the activation conditions are met, the inverter automatically activates the upgrade.

 Copyright © Huawei Technologies Co., Ltd.

Parameter	Description
RS485-2 communication	If this parameter is set to **Enable**, the RS485-2 port can be used. If the port is not used, you are advised to set this parameter to **Disable** to reduce power consumption.
Tracker controller	Selects a controller vendor.
Duration for determining short-time grid disconnection (ms)	The standards of certain countries and regions require that the inverter should not disconnect from the power grid if the power grid experiences a short-time failure. After the fault is rectified, the inverter output power needs to be quickly restored.
AFCI	The North American standard requires that the inverter should have DC arc detection function.
Auto recovery from string-to-ground short-circuit protection	• If this parameter is set to **Enable**, the **String Short-Circuited to Ground** alarm is automatically cleared after fault recovery. • If this parameter is set to **Disable**, the **String Short-Circuited to Ground** alarm cannot be automatically cleared. You need to manually clear the alarm.

----End

7.1.4.4 Built-in PID Recovery

NOTICE

Ensure that the inverter ground cable is securely connected. Otherwise, the built-in PID repair function will be affected and electric shocks may occur.

Working Principle

When the SUN2000 is disconnected from the network, the built-in PID can repair the PV– positive offset. (PV– positive offset refers to raising the voltage between PV– and the ground to above 0 V through voltage compensation.) When designing a PV plant, confirm with the PV module manufacturer that the anti-PID voltage compensation direction of the PV module is the PV– positive offset. Otherwise, PV modules may be damaged.

Procedure

Step 1 Choose **Settings** > **Feature Parameters**. The parameter setting screen is displayed.

Figure 7-11 Built-in PID Recovery

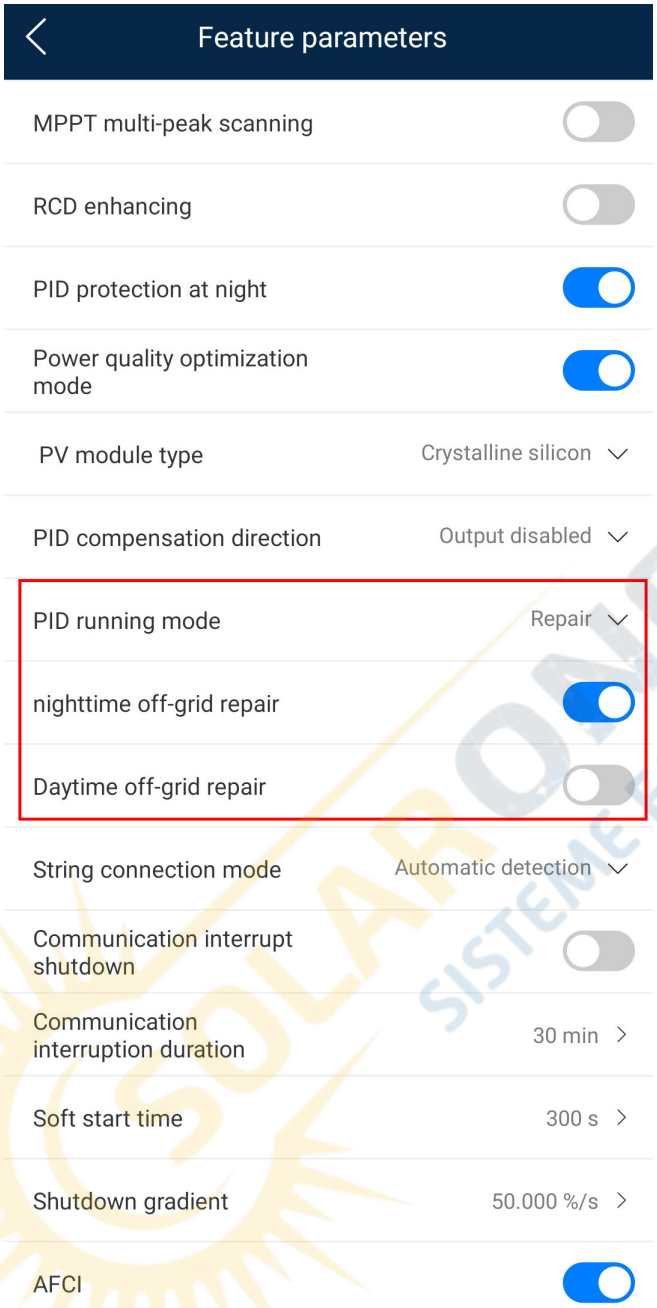

Table 7-4 Parameters settings

Parameter	Description
PID running mode	Specifies the operation mode of the inverter built-in PID.
PID nighttime off-grid repair	Specifies whether to enable the PID nighttime off-grid repair. If **PID running mode** is not set to **Disable**, the parameter can be set.

Parameter	Description
PID daytime off-grid repair	Specifies whether to enable the PID daytime off-grid repair. If **PID running mode** is not set to **Disable**, the parameter can be set.

----End

7.1.4.5 AFCI

Function

If PV modules or cables are not properly connected or damaged, electric arcs may occur, which may cause fire. Huawei SUN2000s provide unique arc detection in compliance with UL 1699B-2018 to ensure the safety of users' lives and property.

This function is enabled by default. The SUN2000 automatically detects arc faults. To disable this function, log in to the FusionSolar App, enter the **Device Commissioning** screen, choose **Settings** > **Feature parameters**, and disable **AFCI**.

NOTE

The AFCI function works only with Huawei optimizers or ordinary PV modules, but does not support third-party optimizers or intelligent PV modules.

Clearing Alarms

The AFCI function involves the **DC arc fault** alarm.

The SUN2000 has the AFCI alarm automatic clearance mechanism. If an alarm is triggered for less than five times within 24 hours, the SUN2000 automatically clears the alarm. If the alarm is triggered for five times or more within 24 hours, the SUN2000 locks for protection. You need to manually clear the alarm on the SUN2000 so that it can work properly.

You can manually clear the alarm as follows:

- **Method 1**: FusionSolar App

  Log in to the FusionSolar App and choose **Me** > **Device commissioning**. On the **Device commissioning** screen, connect and log in to the SUN2000 that generates the AFCI alarm, tap **Alarm management**, and tap **Clear** on the right of the **DC arc fault** alarm to clear the alarm.

 Copyright © Huawei Technologies Co., Ltd.

Figure 7-12 Alarm management

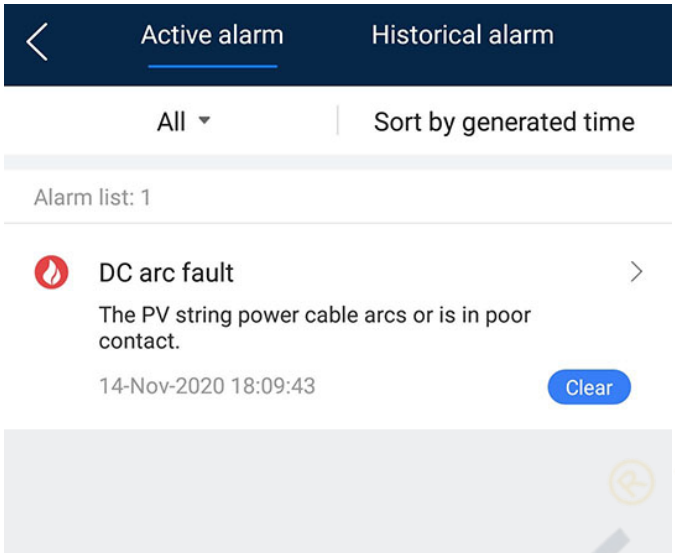

- **Method 2**: FusionSolar Smart PV Management System

  Log in to the FusionSolar Smart PV Management System using a non-owner account, choose **Maintenance** > **Alarm Management**, select the **DC arc fault** alarm, and click **Clear** to clear the alarm.

Figure 7-13 Clearing alarms

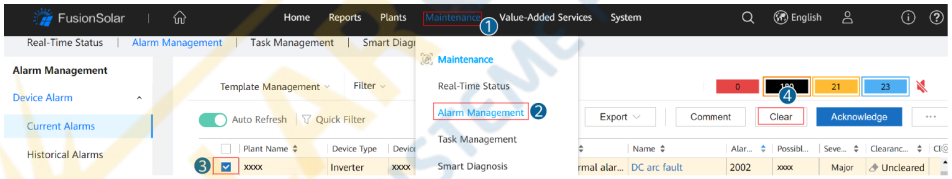

Switch to the owner account with PV plant management rights. On the home page, click the PV plant name to go to the PV plant page, and click **OK** as prompted to clear the alarm.

7.1.5 Operations Related to the Special User

Ensure that the DC side of the SUN2000 is energized before setting grid parameters, protection parameters, feature parameters, and grid adjustment parameters.

7.1.5.1 Setting Grid Parameters

Procedure

Step 1 Choose **Settings** > **Grid Parameters** and set grid parameters.

Figure 7-14 Grid parameters

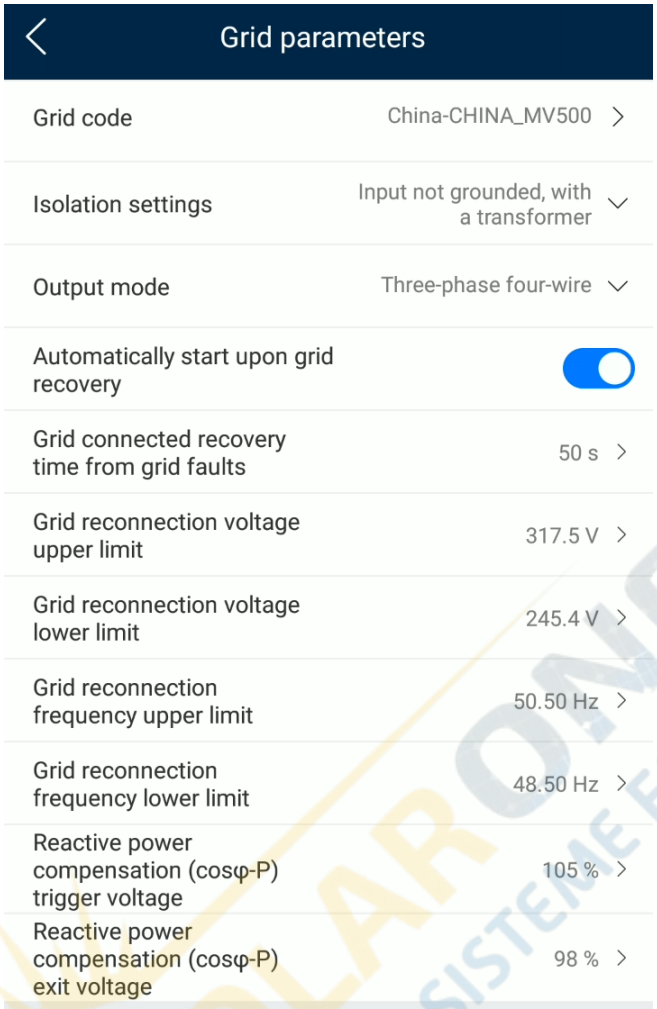

Table 7-5 Grid parameters

Parameter	Description
Grid Code	Set this parameter based on the grid code of the country or region where the inverter is used and the inverter application scenario.
Isolation settings	Set the working mode of the inverter based on the grounding status at DC side and the connection to the power grid.
Output mode	Specifies whether the inverter output has a neutral wire based on the application scenario.
Automatically start upon grid recovery	Specifies whether to allow the inverter to automatically start after the power grid recovers.
Grid connected recovery time from grid faults (s)	Specifies the time after which the inverter begins restarting after the power grid recovers.

Parameter	Description
Grid reconnection voltage upper limit (V)	The standards of certain countries and regions require that after the inverter shuts down for protection due to a fault, if the power grid voltage is higher than **Grid reconnection voltage upper limit**, the inverter is not allowed to reconnect to the grid.
Grid reconnection voltage lower limit (V)	The standards of certain countries and regions require that after the inverter shuts down for protection due to a fault, if the power grid voltage is lower than **Grid reconnection voltage lower limit**, the inverter is not allowed to reconnect to the grid.
Grid reconnection frequency upper limit (Hz)	The standards of certain countries and regions require that after the inverter shuts down for protection due to a fault, if the power grid frequency is higher than **Grid reconnection frequency upper limit**, the inverter is not allowed to reconnect to the grid.
Grid reconnection frequency lower limit (Hz)	The standards of certain countries and regions require that after the inverter shuts down for protection due to a fault, if the power grid frequency is lower than **Grid reconnection frequency lower limit**, the inverter is not allowed to reconnect to the grid.
Reactive power compensation (cosϕ-P) trigger voltage (%)	Specifies the voltage threshold for triggering reactive power compensation based on the cosϕ-P curve.
Reactive power compensation (cosϕ-P) exit voltage (%)	Specifies the voltage threshold for exiting reactive power compensation based on the cosϕ-P curve.

----End

7.1.5.2 Setting Protection Parameters

Procedure

Step 1 Choose **Settings** > **Protection Parameters** and set protection parameters.

Figure 7-15 Protection parameters

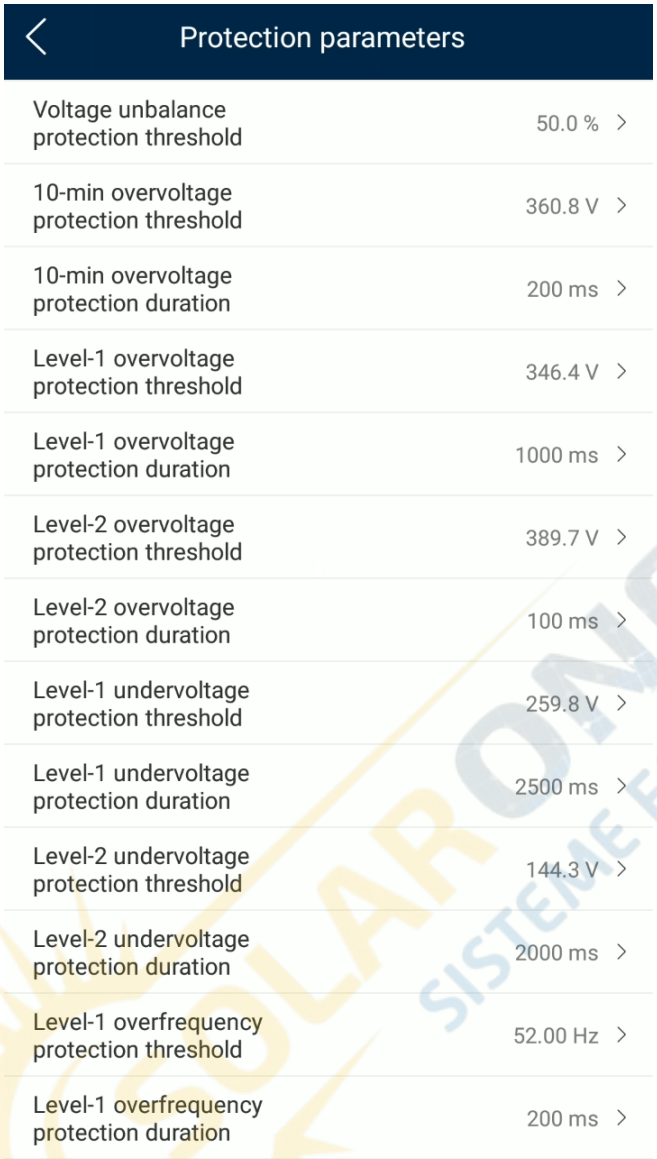

Table 7-6 Protection parameters

Parameter	Description
Voltage unbalance protection threshold (%)	Specifies the solar inverter protection threshold when the power grid voltage is unbalanced.
10-min overvoltage protection threshold (V)	Specifies the 10-minute overvoltage protection threshold.
10-min overvoltage protection duration (ms)	Specifies the 10-minute overvoltage protection duration.

Parameter	Description
Level-N overvoltage protection threshold (V)	Specifies the level-N grid overvoltage protection threshold. **NOTE** ● N can be 1, 2, 3, 4, 5, or 6. ● When **HVRT** is set to **Enable**, and the value of **Level-1 overvoltage protection threshold** is larger than that of **HVRT threshold**, the solar inverter may repeatedly start and shut down if the power grid voltage is between the two values.
Level-N overvoltage protection duration (ms)	Specifies the level-N grid overvoltage protection duration. **NOTE** N can be 1, 2, 3, 4, 5, or 6.
Level-N undervoltage protection threshold (V)	Specifies the level-N grid undervoltage protection threshold. **NOTE** ● N can be 1, 2, 3, 4, 5, or 6. ● When **LVRT** is set to **Enable**, and the value of **Level-1 undervoltage protection threshold** is less than that of **LVRT threshold**, the solar inverter may repeatedly start and shut down if the power grid voltage is between the two values.
Level-N undervoltage protection duration (ms)	Specifies the level-N grid undervoltage protection duration. **NOTE** N can be 1, 2, 3, 4, 5, or 6.
Level-N overfrequency protection threshold (Hz)	Specifies the level-N grid overfrequency protection threshold. **NOTE** N can be 1, 2, 3, 4, 5, or 6.
Level-N overfrequency protection duration (ms)	Specifies the level-N grid overfrequency protection duration. **NOTE** N can be 1, 2, 3, 4, 5, or 6.
Level-N underfrequency protection threshold (Hz)	Specifies the level-N grid underfrequency protection threshold. **NOTE** N can be 1, 2, 3, 4, 5, or 6.
Level-N underfrequency protection duration (ms)	Specifies the level-N grid underfrequency protection duration. **NOTE** N can be 1, 2, 3, 4, or 5.
Active islanding protection	Specifies whether to enable the active islanding protection function.

----End

7.1.5.3 Setting Feature Parameters

Procedure

Step 1 Choose **Settings** > **Feature Parameters**, and set feature parameter

Figure 7-16 Feature parameters

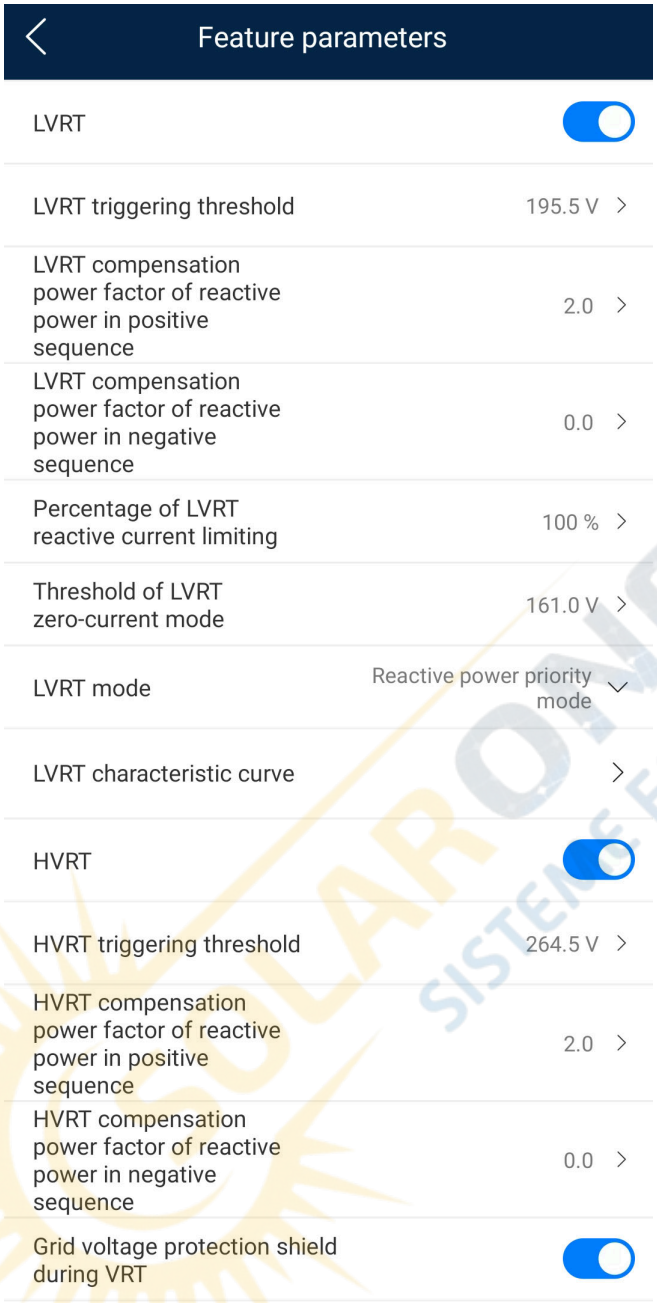

Table 7-7 Feature parameters

Parameter	Description
LVRT	LVRT is short for low voltage ride-through. When the grid voltage is abnormally low for a short time, the inverter cannot disconnect from the power grid immediately and has to work for some time.

Parameter	Description
Threshold for triggering LVRT (V)	Specifies the threshold for triggering LVRT. The threshold settings should meet the local grid standard. This parameter is displayed when **LVRT** is set to **Enable**.
LVRT gradient K1	During LVRT, the solar inverter needs to generate positive-sequence reactive power to support the power grid. This parameter is used to set the positive-sequence reactive power generated by the solar inverter. For example, if you set **LVRT gradient K1** to **2**, the increment of positive-sequence reactive current generated by the solar inverter is 20% of the rated current when the AC voltage decreases by 10% during LVRT. This parameter is displayed when **LVRT** is set to **Enable**.
LVRT gradient K2	During LVRT, the solar inverter needs to generate negative-sequence reactive power to support the power grid. This parameter is used to set the negative-sequence reactive power generated by the solar inverter. For example, if you set **LVRT gradient K2** to **2**, the increment of negative-sequence reactive current generated by the solar inverter is 20% of the rated current when the AC voltage decreases by 10% during LVRT. This parameter is displayed when **LVRT** is set to **Enable**.
Percentage of LVRT reactive current limiting	During LVRT, the solar inverter needs to limit the reactive current. For example, if you set **Percentage of LVRT reactive current limiting** to **50**, the reactive current upper limit of the solar inverter is 50% of the rated current during LVRT. This parameter is displayed when **LVRT** is set to **Enable**.
Threshold of LVRT zero-current mode	When **Zero current due to power grid fault** is enabled, if the power grid voltage is less than the value of **Threshold of LVRT zero-current mode** during LVRT, the zero current mode is used. Otherwise, the mode configured in **LVRT mode** is used. This parameter is displayed when **LVRT** is set to **Enable**.
LVRT mode	Sets LVRT mode. The options are **Zero-current mode**, **Constant current mode**, **Reactive power priority mode**, and **Active power priority mode**. This parameter is displayed when **LVRT** is set to **Enable**.
LVRT characteristic curve	Specifies the low voltage ride-through capability of the inverter.
HVRT	HVRT is short for high voltage ride-through. When the grid voltage is abnormally high for a short time, the inverter cannot disconnect from the power grid immediately and has to work for some time.

 Copyright © Huawei Technologies Co., Ltd.

Parameter	Description
Threshold for triggering HVRT (V)	Specifies the threshold for triggering HVRT. The threshold settings should meet the local grid standard. This parameter is displayed when **HVRT** is set to **Enable**.
HVRT gradient K1	During HVRT, the solar inverter needs to generate positive-sequence reactive power to support the power grid. This parameter is used to set the positive-sequence reactive power generated by the solar inverter. For example, if you set **HVRT gradient K1** to **2**, the increment of positive-sequence reactive current generated by the solar inverter is 20% of the rated current when the AC voltage increases by 10% during HVRT. This parameter is displayed when **HVRT** is set to **Enable**.
HVRT gradient K2	During HVRT, the solar inverter needs to generate negative-sequence reactive power to support the power grid. This parameter is used to set the negative-sequence reactive power generated by the solar inverter. For example, if you set **HVRT gradient K2** to **2**, the increment of negative-sequence reactive current generated by the solar inverter is 20% of the rated current when the AC voltage increases by 10% during HVRT. This parameter is displayed when **HVRT** is set to **Enable**.
Grid voltage protection shield during VRT	Specifies whether to shield the undervoltage protection function during LVRT or HVRT. This parameter is displayed when **LVRT** or **HVRT** is set to **Enable**.
VRT exit hysteresis threshold	Specifies the LVRT/HVRT recovery threshold. ● This parameter is displayed when **LVRT** or **HVRT** is set to **Enable**. ● LVRT recovery threshold = Threshold for triggering LVRT + VRT exit hysteresis threshold ● HVRT recovery threshold = Threshold for triggering HVRT - VRT exit hysteresis threshold
Zero current due to power grid fault	Certain countries and regions have requirements on the output current during high/low voltage ride-through. In this case, set this parameter to **Enable**. After this parameter is set to **Enable**, the output current is less than 10% of the rated current during high/low voltage ride-through. This parameter is displayed when **LVRT** or **HVRT** is set to **Enable**.
Active islanding protection	Specifies whether to enable the active islanding protection function.

 Copyright © Huawei Technologies Co., Ltd.

Parameter	Description
Automatic OFF due to communication interrupted	The standards of certain countries and regions require that the inverter must shut down after the communication is interrupted for a certain time. If **Automatic OFF due to communication interrupted** is set to **Enable** and the inverter communication is interrupted for a specified time (set by **Communication interruption duration**), the inverter will automatically shut down.
Automatic ON due to communication resumed	If this parameter is set to **Enable**, the inverter automatically starts after communication recovers. If this parameter is set to **Disable**, the inverter needs to be started manually after communication recovers. This parameter is displayed when **Automatic OFF due to communication interrupted** is set to **Enable**.
Communication interruption duration (min)	Specifies the duration for determining communication interruption. Used for automatic shutdown for protection in case of communication interruption.
Soft start/boot time (s)	Specifies the duration for the power to gradually increase when the inverter starts.
Soft start time after grid failure (s)	Specifies the time for the power to gradually increase when the inverter restarts after the power grid recovers.
TCP heartbeat interval (s)	Specifies the TCP link timeout period for the solar inverter to connect to the management system.
TCP frame length	Specifies the maximum length of the TCP frame sent by the northbound device to the solar inverter.
Heartbeat period at application layer (min)	Specifies the timeout period for the solar inverter to connect to the management system.
Parallel communication mode	Sets the communication mode between the master and slave servers in SDongle scenarios.

----End

7.1.5.4 Setting Power Adjustment Parameters

Procedure

Step 1 Choose **Settings** > **Power adjustment** and set power adjustment parameters.

Figure 7-17 Power adjustment parameters

Table 7-8 Power adjustment parameters

Parameter	Description
Remote power schedule	If this parameter is set to **Enable**, the inverter responds to the scheduling instruction from the remote port. If this parameter is set to **Disable**, the inverter does not respond to the scheduling instruction from the remote port.
Schedule instruction valid duration (s)	Specifies the time for maintaining the scheduling instruction. When this parameter is set to 0, the scheduling instruction takes effect permanently.
Maximum active power (kW)	Specifies the output upper threshold for the maximum active power to adapt to different market requirements.

Parameter	Description
OFF at 0% power limit	If this parameter is set to **Enable**, the inverter shuts down after receiving the 0% power limit command. If this parameter is set to **Disable**, the inverter does not shut down after receiving the 0% power limit command.
Active power change gradient (%/s)	Specifies the change speed of the inverter active power.
Derated by active power % (%)	Adjusts the active power output of the inverter by percentage. This parameter is displayed if **Remote power schedule** is set to **Enable**. If this parameter is set to **100**, the inverter outputs based on the maximum output power.
Derated by fixed active power (kW)	Adjusts the active power output of the inverter by fixed value. This parameter is displayed if **Remote power schedule** is set to **Enable**. For 1000 V inverters, the maximum value of this parameter for the SUN2000-25KTL-US is 27.5 kW.
Night-time reactive power output	In some specific application scenarios, a power grid company requires that the inverter can perform reactive power compensation at night to ensure that the power factor of the local power grid meets requirements. This parameter is displayed when **Isolation settings** is set to **Input ungrounded, with TF**.
Enable reactive power parameters at night	When this parameter is set to **Enable**, the inverter outputs reactive power based on the setting of **Reactive power compensation at night**. Otherwise, the inverter executes the remote scheduling command. This parameter is displayed when **Night-time reactive power output** is set to **Enable**.
Night-time reactive power compensation (kVar)	During the reactive power compensation at night, the reactive power is scheduled by fixed value. This parameter is displayed when **Night-time reactive power output** and **Enable reactive power parameters at night** are set to **Enable**.
Reactive power change gradient (%/s)	Specifies the change speed of the inverter reactive power.
Reactive power adjustment time (s)	Specifies the adjustment time for the reactive power to reach the target value during reactive power adjustment.
Plant active power gradient (min/100%)	Specifies the rate of active power rise due to sunlight changes.

 Copyright © Huawei Technologies Co., Ltd.

Parameter	Description
Average active power filtering time (ms)	Specifies the period of active power rise due to sunlight changes. This parameter is used with **Plant active power gradient**.
Power factor	Specifies the power factor of the inverter. This parameter is displayed if **Remote power schedule** is set to **Enable**.
Reactive power compensation (Q/S)	Specifies the reactive power output by the inverter.
Overfrequency derating	If this parameter is set to **Enable**, the active power of the inverter will be derated according to a certain slope when the grid frequency exceeds the frequency that triggers overfrequency derating.
Frequency for triggering overfrequency derating (Hz)	The standards of certain countries and regions require that the output active power of inverters be derated when the power grid frequency exceeds a certain value. ● This parameter is displayed when **Overfrequency derating** is set to **Enable**. ● When setting this parameter, ensure that the following condition is met: **Frequency for exiting overfrequency derating** ≤ **Frequency for triggering overfrequency derating** < **Cutoff frequency of overfrequency derating**.
Frequency for exiting overfrequency derating (Hz)	Specifies the frequency threshold for exiting overfrequency derating. ● This parameter is displayed when **Overfrequency derating** is set to **Enable**. ● When setting this parameter, ensure that the following condition is met: **Frequency for exiting overfrequency derating** ≤ **Frequency for triggering overfrequency derating** < **Cutoff frequency of overfrequency derating**.
Cutoff frequency of overfrequency derating (Hz)	Specifies the frequency threshold for cutting off overfrequency derating. ● This parameter is displayed when **Overfrequency derating** is set to **Enable**. ● When setting this parameter, ensure that the following condition is met: **Frequency for exiting overfrequency derating** ≤ **Frequency for triggering overfrequency derating** < **Cutoff frequency of overfrequency derating**.
Cutoff power of overfrequency derating (%)	Specifies the power threshold for cutting off overfrequency derating. ● This parameter is displayed when **Overfrequency derating** is set to **Enable**.

 Copyright © Huawei Technologies Co., Ltd.

Parameter	Description
Power recovery gradient of overfrequency derating (%/min)	Specifies the recovery rate of the overfrequency derating power. ● This parameter is displayed when **Overfrequency derating** is set to **Enable**.
PF (U) voltage detection filtering time (s)	Specifies the time for filtering the grid voltage in the PF-U curve.
Apparent power baseline (kVA)	Adjusts the apparent output baseline of the inverter.
Active power baseline (kW)	Adjusts the active output baseline of the inverter.
Communication disconnection fail-safe	In the inverter export limitation scenario, if this parameter is set to **Enable**, the inverter will perform active power derating by percentage when the communication between the inverter and the SmartLogger or Smart Dongle is disconnected for more than the time specified by **Communication disconnection detection time**.
Communication disconnection detection time (s)	Specifies the fail-safe detection time for the disconnection between the inverter and the SmartLogger or Smart Dongle. This parameter is displayed when **Communication disconnection fail-safe** is set to **Enable**.
Closed-loop controller	Specifies the grid-tied power controller. Before setting the parameter, confirm the controller type. Incorrect setting will result in abnormal power output of the solar inverter. **Solar inverter** applies only to the scenario where a single solar inverter is used or where a single inverter is used with a Smart Dongle.
Limit value for minimum PF of Q-U characteristic curve	Limits the current PF value to restrict the Q-U curve output reactive power.
Power percentage for triggering Q-U scheduling	Specifies the reference apparent power, in percentage. When the actual apparent power of the inverter is greater than the value of this parameter, the Q-U characteristic curve scheduling function is enabled.
Q-U characteristic curve	The inverter adjusts Q/S (the ratio of the output reactive power to apparent power) in real time based on U/Un(%) (the ratio of the actual power grid voltage to the rated power grid voltage).
Q-P characteristic curve	The inverter adjusts Q/Pn (the ratio of the output reactive power to the rated active power) in real time based on P/Pn(%) (the ratio of the actual active power to the rated active power).
Cosϕ-P/Pn characteristic curve	The inverter adjusts the output power factor cosϕ in real time based on P/Pn(%).

 Copyright © Huawei Technologies Co., Ltd.

----End

7.2 Upgrading the Inverter

USB flash drives of SanDisk, Netac, and Kingston are recommended. Other brands may be incompatible.

NOTE

Delete the script file immediately after use to reduce information disclosure risks.

Procedure

Step 1 Download the required software upgrade package from the technical support website.

Step 2 Decompress the upgrade package and copy all files to the root directory of the USB flash drive.

NOTICE

Do not modify the content in the upgrade package because the files involve RSA signature verification. If you modify the content, the upgrade will fail.

Step 3 Connect the USB flash drive to the USB port. The system automatically identifies the USB flash drive and executes all commands specified in the boot script file. View the LED indicator to determine the operating status.

Table 7-9 LED indicator description

LED Indicator	Status	Meaning
	Green off	There is no operation with a USB flash drive.
	Blinking green slowly	There is an operation with a USB flash drive.
	Blinking green fast	An operation with a USB flash drive has failed.
	Steady green	An operation with a USB flash drive is successful.

Step 4 The system automatically restarts when the upgrade is completed. All LED indicators are off during the restart. After the restart, the indicator is blinking green slowly for 1 minute and then it becomes steady green, which indicates that the upgrade is successful.

----End

8 Maintenance

Prerequisites

DANGER

- Wear personal protective equipment and use dedicated insulated tools to avoid electric shocks or short circuits.

WARNING

- Before performing maintenance, power off the equipment, follow the instructions on the delayed discharge label, and wait for a period of time as specified to ensure that the equipment is not energized.

8.1 Shutdown and Power-Off

Context

WARNING

- If two SUN2000s share the same AC switch on the AC side, power off the two SUN2000s.
- After the SUN2000 powers off, the remaining electricity and heat may still cause electric shocks and body burns. Therefore, put on protective gloves and begin servicing the SUN2000 15 minutes after the power-off.

Procedure

Step 1 Run a shutdown command on the SUN2000 app, SmartLogger, or NMS.

 Copyright © Huawei Technologies Co., Ltd.

For details, see **7 Man-Machine Interactions**, or the SmartLogger or NMS user manual.

Step 2 Turn off the AC switch between the SUN2000 and the power grid.

Step 3 Set all DC switches to OFF.

Step 4 (Optional) Install screws for locking DC switches.

NOTE

For the model used in Australia, perform this step to meet the local standards

Figure 8-1 Install screws for locking DC switches

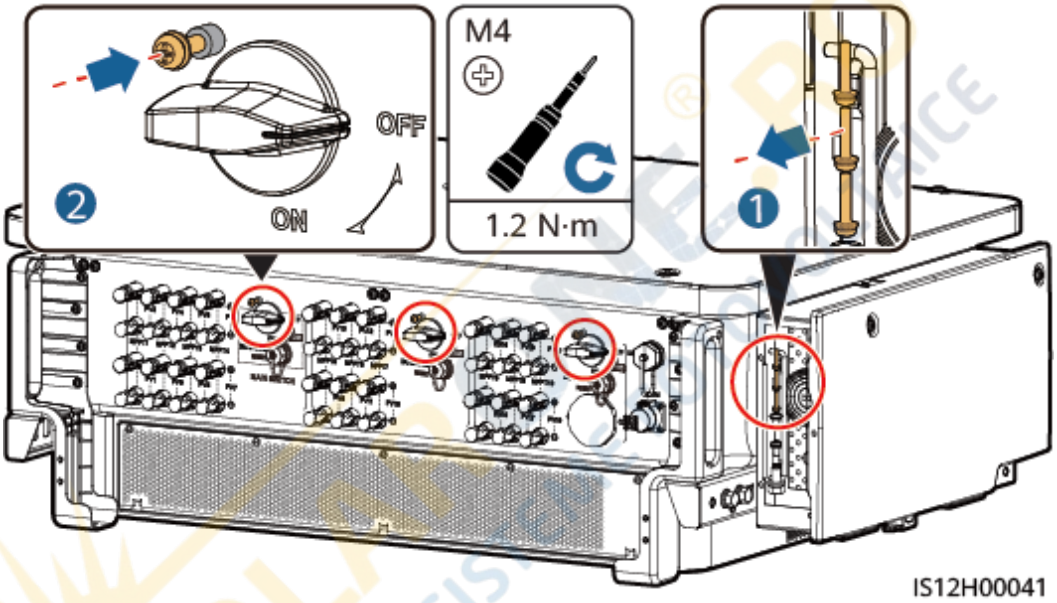

----End

8.2 Power-Off for Troubleshooting

Context

To prevent personal injury and equipment damage, perform the following procedure to power off the solar inverter for troubleshooting or replacement.

CAUTION

- When a solar inverter is faulty, try to avoid standing in front of the solar inverter.
- If the LED1 indicator of the inverter is off, the switches are in the OFF position, do not operate the DC switches of the inverter. In this case, go to **Step 4**.
- Do not operate the DC switch on the solar inverter before you finish **Step 3** to **Step 5**.
- The DC switch can be automatically disconnected when an internal fault is detected in an inverter. Do not turn on the switch before the fault is cleared.
- If the AC switch between the solar inverter and the power grid has automatically disconnected, do not turn on the switch before the fault is rectified.
- Before power-off for troubleshooting, do not touch the energized components of the solar inverter. Otherwise, electric shocks or arcing may occur.

Procedure

Step 1 Wear proper personal protective equipment (PPE).

Step 2 If the solar inverter is not shut down due to a fault, send a shutdown command on the SUN2000 app, SmartLogger, or management system. If the solar inverter has shut down due to a fault, go to the next step.

Step 3 Turn off the AC switch between the solar inverter and the power grid.

Step 4 Measure the DC current of each PV input string using a clamp meter that is set to the DC position.

- If the current is less than or equal to 0.5 A, go to the next step.
- If the current is higher than 0.5 A, wait until the solar irradiance decreases and the PV string current decreases below 0.5 A at night, and then go to the next step.

Step 5 Open the maintenance compartment door, install a support bar, and use a multimeter to measure the voltage between the AC terminal block and the ground. Ensure that the AC side of the solar inverter is disconnected.

Step 6 Turn off all DC input switches of the solar inverter.

 Copyright © Huawei Technologies Co., Ltd.

Figure 8-2 Power-off for maintenance

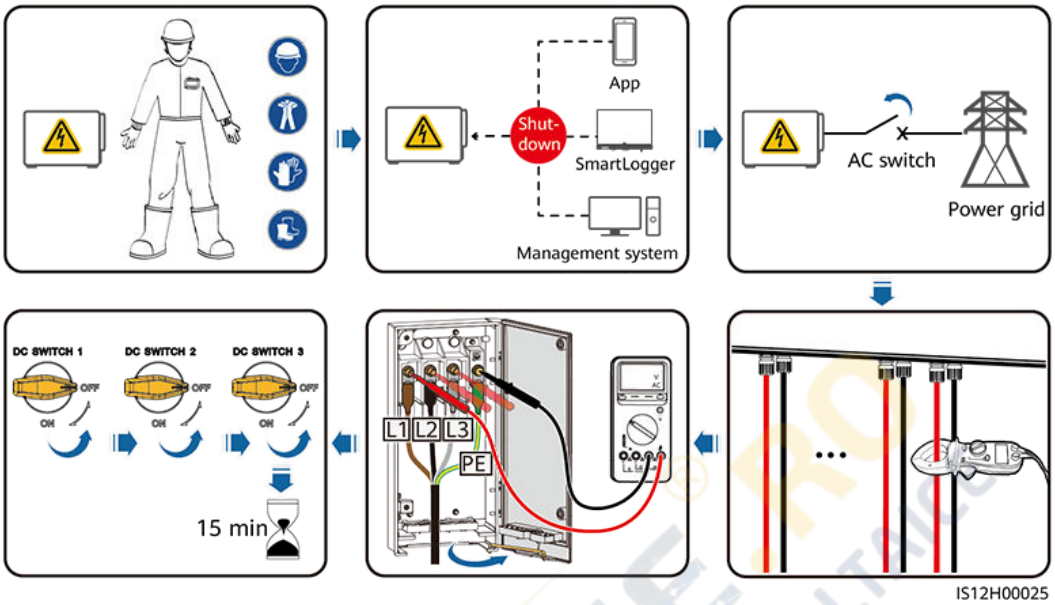

Step 7 Wait for 15 minutes and troubleshoot or repair the inverter.

WARNING

- Do not open the host panel for maintenance if the solar inverter is emitting odor or smoke, or has obvious exceptions.
- If the solar inverter does not emit odor or smoke and is intact, repair or restart it based on the alarm handling suggestions. Do not stand in front of the solar inverter during the restart.

----End

8.3 Routine Maintenance

To ensure that the solar inverter can operate properly for a long term, you are advised to perform routine maintenance on it as described in this chapter.

CAUTION

- Before cleaning the system, connecting cables, and maintaining the grounding reliability, power off the system and ensure that the all DC switches on the solar inverter are OFF.
- If you need to open the maintenance compartment door in rainy or snowy days, take protective measures to prevent rain or snow from entering the maintenance compartment. If unavoidable, do not open the maintenance compartment door.

 Copyright © Huawei Technologies Co., Ltd.

Table 8-1 Maintenance list

Check Item	Check Method	Maintenance Interval
Cleanness of air intake and exhaust vents, and fans	• Check whether there is dust on the air intake and exhaust vents. If necessary, remove the baffle of the air intake vent and clean the dust. • Check whether the fans produce abnormal sounds during operation.	Once every 6 to 12 months
System running status	• The solar inverter is not damaged or deformed. • The solar inverter operates with no abnormal sound. • All solar inverter parameters are correctly set. Perform this check when the solar inverter is running.	Once every 6 months
Cables connections	• Cables are securely connected. • Cables are intact, and in particular, the parts touching the metallic surface are not scratched. • Check whether the sealing caps of idle DC input terminals fall off. • Unused terminals and ports are locked by watertight caps.	The first inspection is 6 months after the initial commissioning. From then on, the interval can be 6 to 12 months.
Grounding reliability	Ground cables are securely connected.	The first inspection is 6 months after the initial commissioning. From then on, the interval can be 6 to 12 months.
Clear vegetation around the inverters	• Perform inspection and weeding as required. • Clean the site promptly after weeding.	Based on the local wilting season

 Copyright © Huawei Technologies Co., Ltd.

Figure 8-3 Removing the baffle of the air intake vent

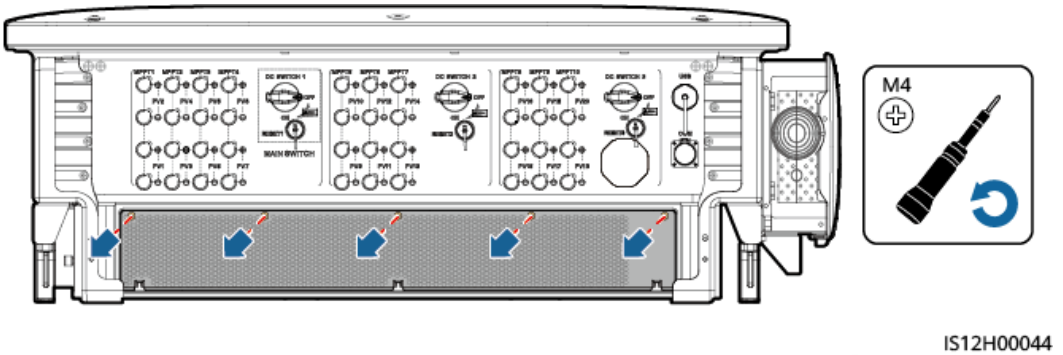

NOTICE

After the cleaning is complete, reinstall the baffle plate. Tighten the screws with a torque of 1.2 N·m.

8.4 Troubleshooting

Alarm severities are defined as follows:

- Major: The inverter is faulty or the external environment is abnormal. As a result, the output power decreases or the inverter stops feeding into the grid.
- Minor: Some components are faulty without affecting the grid-tied power generation.
- Warning: The solar inverter works properly. The output power decreases or some authorization functions fail due to external factors.

Table 8-2 Common alarms and troubleshooting measures

Alarm ID	Alarm Name	Alarm Severity	Possible Cause	Suggestion
2001	High String Input Voltage	Major	• Cause ID = 1: PV1 and PV2 • Cause ID = 2: PV3 and PV4 • Cause ID = 3: PV5 and PV6 • Cause ID = 4: PV7 and PV8 • Cause ID = 5: PV9 and PV10 • Cause ID = 6: PV11 and PV12 • Cause ID = 7: PV13 and PV14 • Cause ID = 8: PV15 and PV16 • Cause ID = 9: PV17 and PV18 • Cause ID = 10: PV19 and PV20 The PV array is not properly configured. Excessive PV modules are connected in series to a PV string, and therefore the PV string open-circuit voltage exceeds the maximum operating voltage of the solar inverter.	Reduce the number of PV modules connected in series in the PV string until the PV string open-circuit voltage is not greater than the maximum operating voltage of the solar inverter. After the PV array configuration is corrected, the alarm disappears.
2003	DC arc fault	Major	Cause ID = 1–20: PV1–PV20 The PV string power cables arc or are in poor contact.	Check whether the PV string cables arc or are in poor contact.
2009	String Short-Circuited to Ground	Major	1. A short circuit has occurred between the PV array and the ground. 2. The ambient air of the PV array is damp and the insulation between the PV array and the ground is poor.	1. Check the output-to-ground impedance of the PV array. If a short circuit or inadequate insulation is detected, rectify it. 2. If auto recovery from string-to-ground short-circuit protection is disabled, check and rectify the preceding faults, and manually clear the alarm. 3. If auto recovery from string-to-ground short-circuit protection is enabled, the alarm will be automatically cleared after fault recovery.

 Copyright © Huawei Technologies Co., Ltd.

Alarm ID	Alarm Name	Alarm Severity	Possible Cause	Suggestion
2011	String Reverse Connection	Major	Cause ID = 1–20: PV1–PV20 The PV string is reversely connected.	1. Check whether the PV string is connected to the device in reverse polarity. If yes, wait until the PV string current decreases to below 0.5 A, set DC SWITCH to OFF, and adjust the PV string polarity. 2. If the fault persists, reset the device on the local maintenance app or WebUI of the upper-layer controller. Alternatively, you can turn off the AC and DC switches, wait for 5 minutes, and then turn on the AC and DC switches.
2012	String Current Backfeed	Warning	Cause ID = 1–20: PV1–PV20 Only a few PV modules are connected in series in the PV string. Therefore, the terminal voltage is lower than that of other PV strings.	1. Check whether the number of PV modules connected in series in the PV string is less than that in other PV strings connected in parallel. If yes, wait until the solar irradiance declines at night and the PV string current drops below 0.5 A. Then, turn off the DC switches and add more PV modules. 2. Check whether the PV string is shaded. 3. Check whether the open-circuit voltage of the PV string is normal.

 Copyright © Huawei Technologies Co., Ltd.

Alarm ID	Alarm Name	Alarm Severity	Possible Cause	Suggestion
2014	High Input String Voltage to Ground	Major	Cause ID = 1 The voltage between the input PV string and the ground is abnormal, and there is a risk of power attenuation.	1. If no PID compensation device exists in the system, disable the PID protection function at night. Note: If the PID protection function is disabled but reactive power compensation at night is enabled, PV modules may attenuate. 2. If there is a PID compensation device in the system, check whether it is faulty. If yes, rectify the fault. 3. Check whether the settings of compensation direction for the solar inverter and the PID device are consistent. If not, set them to be consistent based on the PV module model. (Note: If the PV– is set to positive offset, the voltage between the solar inverter PV– and the ground should be greater than 0 V to clear the alarms; if the PV+ is set to negative offset, the voltage between the solar inverter PV+ and the ground should be less than 0 V to clear the alarms.) 4. If the fault occurs frequently, contact technical support.
2015	PV String Loss	Warning	Cause ID = 1–20 This alarm is generated when the PV string status is abnormal due to the following conditions: a single PV string is lost; both 2-in-1 PV strings are lost; one of the 2-in-1 PV strings is lost.	1. Check whether the solar inverter terminals are properly connected. 2. Check whether the PV string terminals are properly connected. 3. If a 2-in-1 terminal is used, check whether it is normal.

 Copyright © Huawei Technologies Co., Ltd.

Alarm ID	Alarm Name	Alarm Severity	Possible Cause	Suggestion
2021	AFCI self-check failure	Major	Cause ID = 1, 2 The AFCI self-check fails.	Turn off the AC output switch and then the DC input switches. After 5 minutes, turn them on in the same sequence. If the fault persists, contact technical support.
2031	Phase Wire Short-Circuited to PE	Major	Cause ID = 1 The impedance of the output phase wire to PE is low or the output phase wire is short-circuited to PE.	Check the impedance of the output phase wire to PE, locate the position with lower impedance, and rectify the fault.
2032	Grid Loss	Major	Cause ID = 1 1. The power grid experiences an outage. 2. The AC circuit is disconnected or the AC switch is off.	1. Check the AC voltage. 2. Check whether the AC circuit is disconnected or the AC switch is off.
2033	Grid Undervoltage	Major	Cause ID = 1 The grid voltage is below the lower threshold or the undervoltage duration exceeds the time that triggers low voltage ride-through (LVRT).	1. If the alarm occurs occasionally, the power grid may be abnormal temporarily. The solar inverter automatically recovers after detecting that the power grid becomes normal. 2. If the alarm occurs frequently, check whether the power grid voltage is within the acceptable range. If not, contact the local power operator. If yes, log in to the mobile app, SmartLogger, or network management system (NMS) to modify the grid undervoltage protection threshold with the consent of the local power operator. 3. If the fault persists for a long time, check the AC circuit breaker and AC output power cable.

 Copyright © Huawei Technologies Co., Ltd.

Alarm ID	Alarm Name	Alarm Severity	Possible Cause	Suggestion
2034	Grid Overvoltage	Major	Cause ID = 1 The grid voltage exceeds the upper threshold or the overvoltage duration exceeds the time that triggers high voltage ride-through (HVRT).	1. Check whether the grid connection voltage exceeds the upper threshold. If yes, contact the local power operator. 2. If you have confirmed that the grid connection voltage exceeds the upper threshold and have obtained the consent of the local power operator, modify the overvoltage protection threshold. 3. Check whether the peak grid voltage exceeds the upper threshold.
2035	Grid Volt. Imbalance	Major	Cause ID = 1 The difference between grid phase voltages exceeds the upper threshold.	1. Check that the grid voltage is within the normal range. 2. Check that the AC output power cable is correctly connected. If the AC output power cable is correctly connected, yet the alarm persists and affects the energy yield of the PV plant, contact the local power operator.

 Copyright © Huawei Technologies Co., Ltd.

Alarm ID	Alarm Name	Alarm Severity	Possible Cause	Suggestion
2036	Grid Overfrequency	Major	Cause ID = 1 Power grid exception: The actual power grid frequency is higher than the standard requirement for the local power grid.	1. If the alarm occurs occasionally, the power grid may be abnormal temporarily. The solar inverter automatically recovers after detecting that the power grid becomes normal. 2. If the alarm occurs frequently, check whether the power grid frequency is within the acceptable range. If not, contact the local power operator. If yes, log in to the mobile phone app, SmartLogger, or NMS to modify the power grid overfrequency protection threshold with the consent of the local power operator.
2037	Grid Underfrequency	Major	Cause ID = 1 Power grid exception: The actual power grid frequency is lower than the standard requirement for the local power grid.	1. If the alarm occurs occasionally, the power grid may be abnormal temporarily. The solar inverter automatically recovers after detecting that the power grid becomes normal. 2. If the alarm occurs frequently, check whether the power grid frequency is within the acceptable range. If not, contact the local power operator. If yes, log in to the mobile phone app, SmartLogger, or NMS to modify the power grid underfrequency protection threshold with the consent of the local power operator.

 Copyright © Huawei Technologies Co., Ltd.

Alarm ID	Alarm Name	Alarm Severity	Possible Cause	Suggestion
2038	Unstable Grid Frequency	Major	Cause ID = 1 Power grid exception: The actual grid frequency change rate does not comply with the local power grid standard.	1. If the alarm occurs occasionally, the power grid may be abnormal temporarily. The solar inverter automatically recovers after detecting that the power grid becomes normal. 2. If the alarm occurs frequently, check whether the grid frequency is within the acceptable range. If not, contact the local power operator.
2039	AC Overcurrent	Major	Cause ID = 1 The grid experiences a dramatic voltage drop or is short-circuited. As a result, the transient AC current of the device exceeds the upper threshold and triggers protection.	1. The device detects its external working conditions in real time. After the fault is rectified, the device automatically recovers. 2. If the alarm occurs frequently and affects the operation of the power plant, check whether AC short circuit exists. If the fault persists, contact your dealer or technical support.
2040	Output DC Component Overhigh	Major	Cause ID = 1 The DC component of the solar inverter output current exceeds the specified upper threshold.	1. If the exception is caused by an external fault, the solar inverter automatically recovers after the fault is rectified. 2. If the alarm occurs frequently, contact your dealer or technical support.

 Copyright © Huawei Technologies Co., Ltd.

Alarm ID	Alarm Name	Alarm Severity	Possible Cause	Suggestion
2051	Abnormal Residual Current	Major	Cause ID = 1 The insulation impedance of the input side to PE decreases when the solar inverter is operating.	1. If an alarm is generated, check whether the impedance between PV strings and the ground is too low, or a PV string is short-circuited to the ground due to damage. 2. If the alarm occurs frequently or persists, check whether the impedance between the PV string and the ground is too low.
2061	Abnormal Grounding	Major	Cause ID = 1 The neutral wire or PE wire is not connected when **Output mode** of the solar inverter is set to **Three-phase four-wire**.	1. Check that the neutral wire and PE wire of the solar inverter are properly connected. 2. Check whether the voltage between the neutral wire and the ground exceeds 30 V. If yes, set **Output mode** to **Three-phase three-wire** on the mobile app, SmartLogger, or NMS after obtaining the consent of the local power operator.
2062	Low Insulation Resistance	Major	Cause ID = 1 1. The PV string is short-circuited to PE. 2. The PV string has been in a moist environment for a long time and the circuit is not well insulated to ground.	1. Check the impedance of the PV string to PE. If a short circuit occurs or the insulation is insufficient, rectify it. 2. Check that the PE cable of the solar inverter is correctly connected. 3. If you are sure that the impedance is less than the default value in a cloudy or rainy environment, reset **Insulation resistance protection**.

 Copyright © Huawei Technologies Co., Ltd.

Alarm ID	Alarm Name	Alarm Severity	Possible Cause	Suggestion
2063	Cabinet Overtemperature	Minor	Cause ID = 1 1. The solar inverter is installed in a place with poor ventilation. 2. The ambient temperature is too high. 3. The solar inverter is not working properly.	1. Check the ventilation and whether the ambient temperature of the solar inverter exceeds the upper limit. If the ventilation is poor or the ambient temperature is too high, improve ventilation. 2. If both the ventilation and ambient temperature meet requirements yet the fault persists, contact your dealer or technical support.
2064	Device Fault	Major	Cause ID = 1-5, 7-12, 20 A fault occurs on the internal inverter circuit.	● Cause ID = 1 Wait until the PV string current decreases to below 0.5 A, and then turn off all DC switches. If the fault persists, contact your dealer or technical support. ● Cause ID = 2-5, 7-12 Turn off the AC output switch and then the DC input switches. After 5 minutes, turn them on in the same sequence. If the fault persists, contact technical support. ● Cause ID = 20 Do not turn off the AC output switch or DC input switch. Contact your dealer or technical support.
2065	Upgrade Failed or Software Version Unmatch	Minor	Cause ID = 1–4 The upgrade does not complete normally.	1. Perform an upgrade again. 2. If the update fails for multiple times, contact your dealer or technical support.
2066	License Expired	Warning	Cause ID = 1 1. The privilege license has entered the grace period. 2. The privilege feature will be invalid soon.	1. Apply for a new license. 2. Load a new license.

 Copyright © Huawei Technologies Co., Ltd.

Alarm ID	Alarm Name	Alarm Severity	Possible Cause	Suggestion
2067	Faulty Power Collector	Major	Cause ID = 1 The power meter is disconnected.	1. Check whether the configured power meter model is the same as the actual model. 2. Check whether the communications parameters of the power meter are the same as the RS485 configurations of the solar inverter. 3. Check whether the power meter is powered on and whether the RS485 communications cable is connected.
2085	Built-in PID operation abnormal	Minor	Cause ID = 1, 2 ● The output resistance of PV arrays to ground is low. ● The system insulation resistance is low.	● Cause ID = 1 1. Turn off the AC output switch and DC input switch, wait for a period of time (for details about the wait time, see the description on the device safety warning label), and then turn on the DC input switch and AC output switch. 2. If the fault persists, contact your dealer or technical support. ● Cause ID = 2 1. Check the impedance between the PV array output and the ground. If a short circuit occurs or the insulation is insufficient, rectify the fault. 2. If the fault persists, contact your dealer or technical support.

 Copyright © Huawei Technologies Co., Ltd.

Alarm ID	Alarm Name	Alarm Severity	Possible Cause	Suggestion
2086	External Fan Abnormal	Major	Cause ID = 1–3: FAN 1–3 The external fan is short-circuited, the power supply is insufficient, or the air channel is blocked.	1. Shut down the fan, turn off the DC switch, check whether the fan blades are damaged, and clear the foreign matter around the fan. 2. Reinstall the fan, turn on the DC switch, and wait for the solar inverter to start. If the fault persists after 15 minutes, replace the external fan.
2087	Internal Fan Abnormal	Major	Cause ID = 1 The internal fan is short-circuited, the power supply is insufficient, or the fan is damaged.	Turn off the AC output switch and then the DC input switch. Turn them on after 5 minutes and wait for the solar inverter to connect to the power grid. If the fault persists after 5 minutes, contact your dealer or technical support for replacement.

 Copyright © Huawei Technologies Co., Ltd.

Alarm ID	Alarm Name	Alarm Severity	Possible Cause	Suggestion
2088	Abnormal DC protection unit	Major	• Cause ID = 1 The fuse is not in position or is blown. • Cause ID = 2 The two relays on the breaking board are open-circuited. • Cause ID = 3 The contact points of the DC switches are stuck.	• Cause ID = 1/2 Turn off the AC output switch and DC input switch, and then turn them on after 5 minutes. Wait for the inverter to connect to the power grid. If the alarm persists after 5 minutes, contact your dealer or technical support. • Cause ID = 3 If the PV indicator (LED1) is off, contact your dealer or technical support to replace the device. If the PV indicator (LED1) is on, wait until the PV string current decreases to below 0.5 A. Then turn off the AC output switch and then the DC input switch. After 5 minutes, turn on the AC output switch and the DC input switch. Wait until the inverter connects to the power grid. If the fault persists after 5 minutes, contact your dealer or technical support for replacement.
2093	Abnormal DC Switches	Minor	Cause ID=1 The DC switch is not in the ON position, or the DC switch reset button is not pressed down to the bottom.	Check whether all DC switches are in the ON position. If not, turn the switches to the ON position (you can rotate the switches with force to ensure that they are in position). If the switches still cannot be turned to the ON position, press the reset buttons of all DC switches inwards until they cannot be moved further, and then turn on the DC switches again.

 Copyright © Huawei Technologies Co., Ltd.

Alarm ID	Alarm Name	Alarm Severity	Possible Cause	Suggestion
61440	Faulty Monitoring Unit	Minor	Cause ID = 1 1. The flash memory is insufficient. 2. The flash memory has bad sectors.	Turn off the AC output switch and then the DC input switches. After 5 minutes, turn them on in the same sequence. If the fault persists, replace the monitoring board, or contact your dealer or technical support.

NOTE

If you cannot rectify the fault using the recommended method in the **Suggestion** column, contact your dealer or technical support.

8.5 Replacing a Fan

CAUTION

- Before replacing a fan, power off the inverter.
- When replacing a fan, use insulation tools and wear personal protective devices.

NOTE

If the fan tray gets stuck when being pulled or pushed, slightly lift it.

Step 1 Remove the screw on the fan tray and save it. Pull out the fan tray until the fan baffle plate aligns with the inverter chassis.

Figure 8-4 Pulling out fan tray (1)

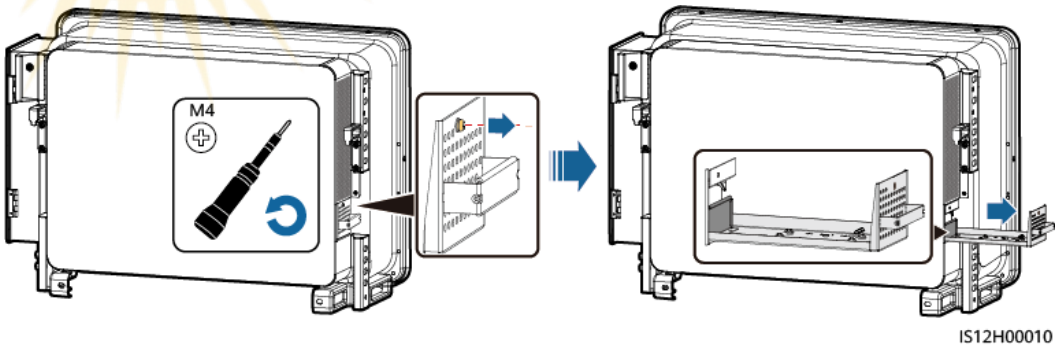

Step 2 Remove the cable ties shared by the cables, unscrew the connectors, and disconnect the cables.

Figure 8-5 Disconnecting cables

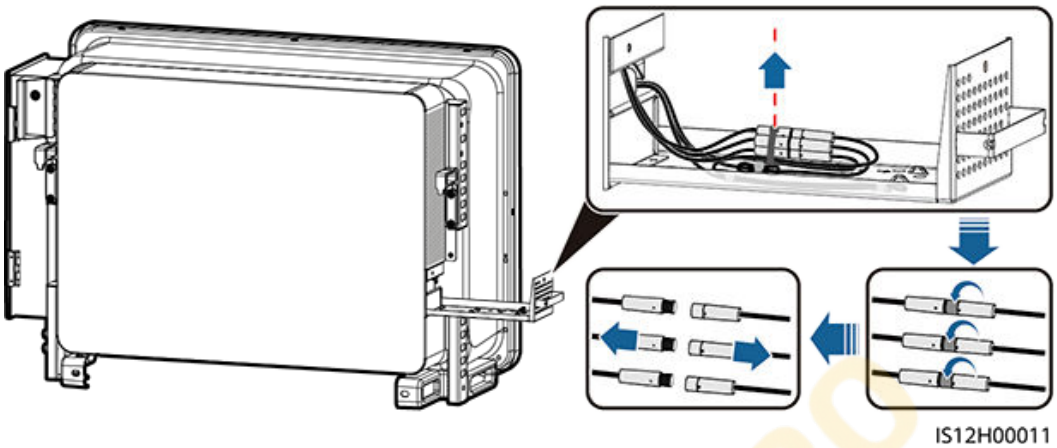

Step 3 Pull out the fan tray.

Figure 8-6 Pulling out fan tray (2)

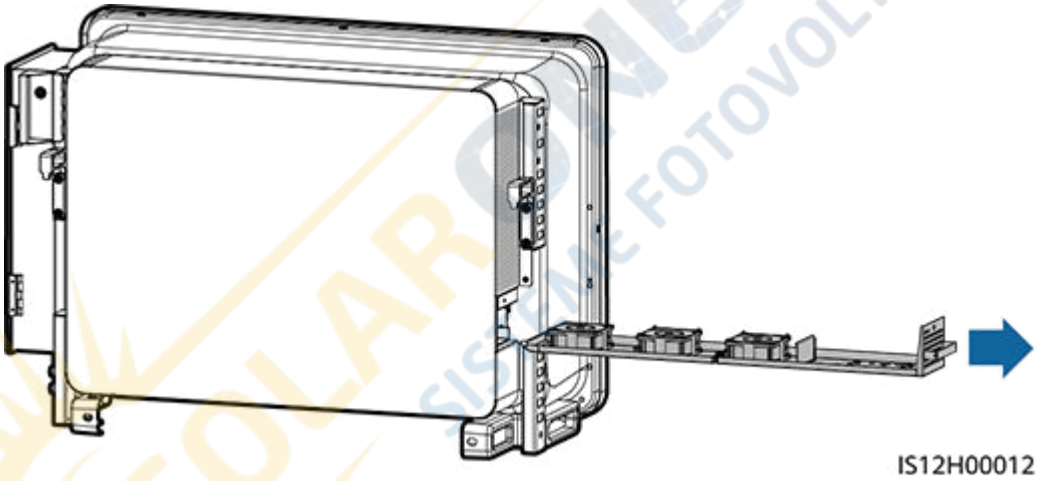

Step 4 Remove cable ties from the faulty fan.

- FAN 1 Faulty

Figure 8-7 Removing the FAN 1 cable ties

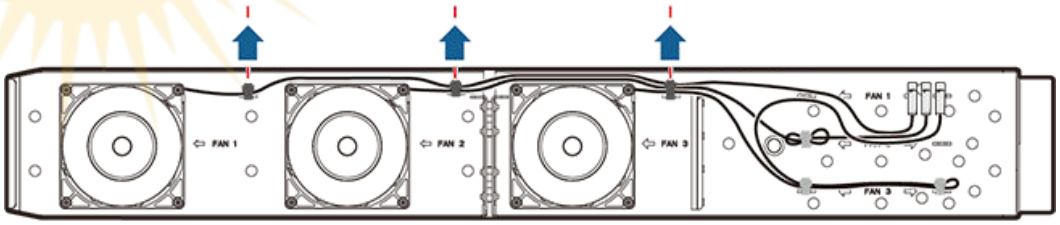

- FAN 2 Faulty

Figure 8-8 Removing the FAN 2 cable ties

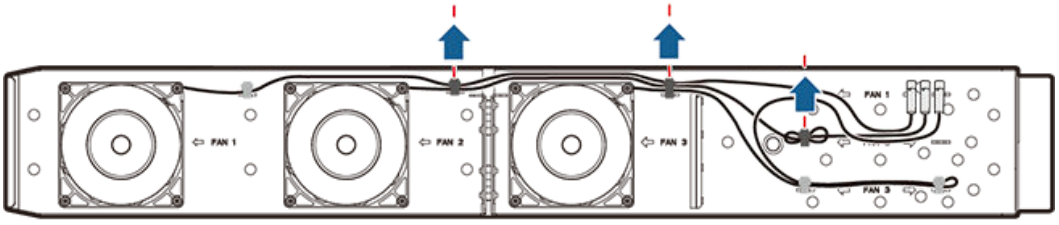

- FAN 3 Faulty

Figure 8-9 Removing the FAN 3 cable ties

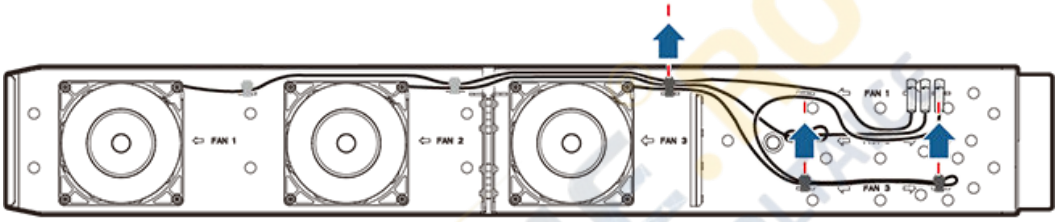

Step 5 Remove the faulty fan (FAN 1 is used as an example).

Figure 8-10 Removing the fan

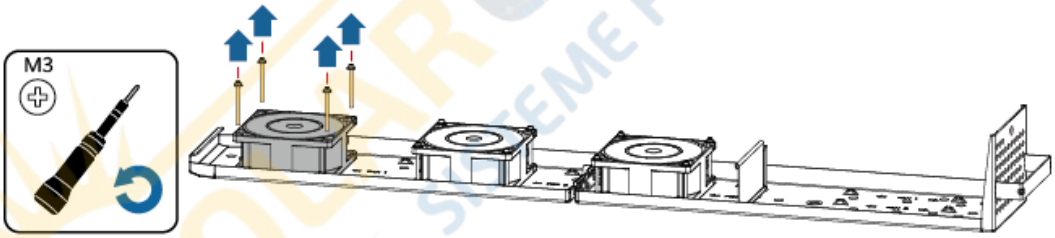

Step 6 Install the new fan (FAN 1 is used as an example).

Figure 8-11 Installing a new fan

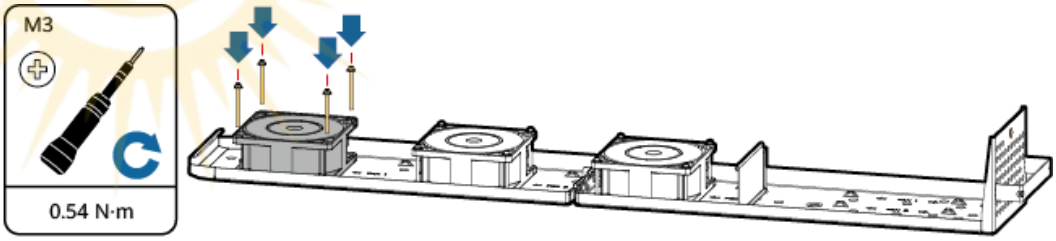

Step 7 Bind the fan cables.

- Binding positions for fan 1

Figure 8-12 Binding the FAN 1 cables

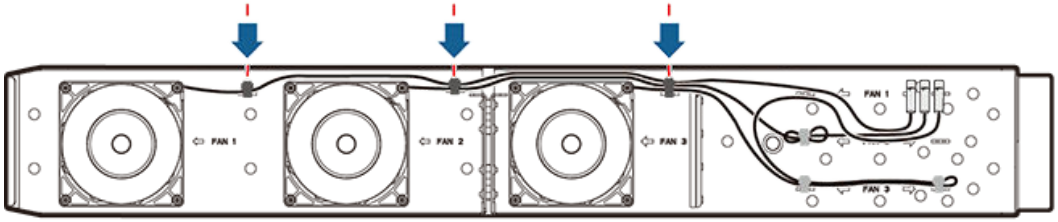

- Binding positions for fan 2

Figure 8-13 Binding the FAN 2 cables

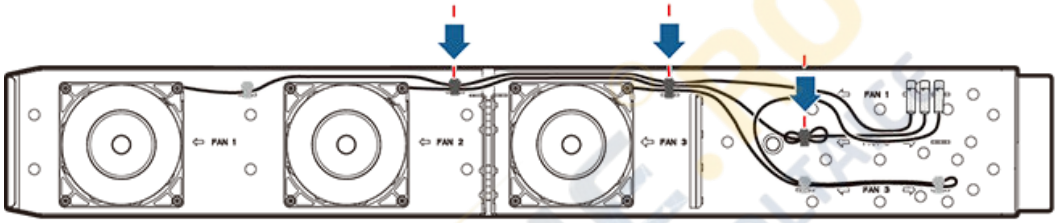

- Binding positions for fan 3

Figure 8-14 Binding the FAN 3 cables

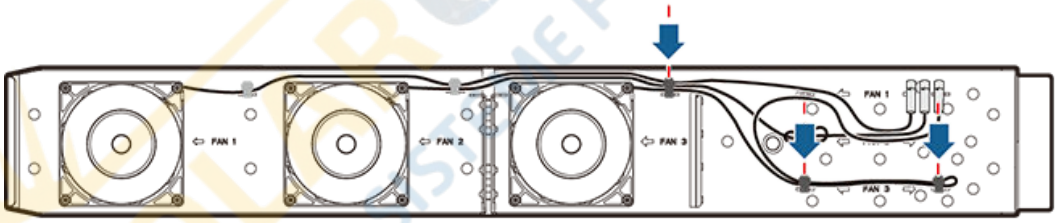

Step 8 Push the fan tray into the slot until the fan baffle plate aligns with the inverter chassis.

Figure 8-15 Pushing the fan tray in

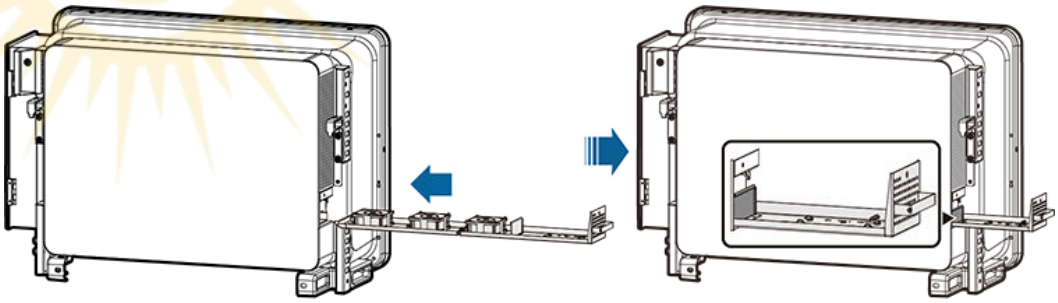

Step 9 Connect the cables correctly according to the cable labels and bind the cables.

Figure 8-16 Reconnecting and binding the cables

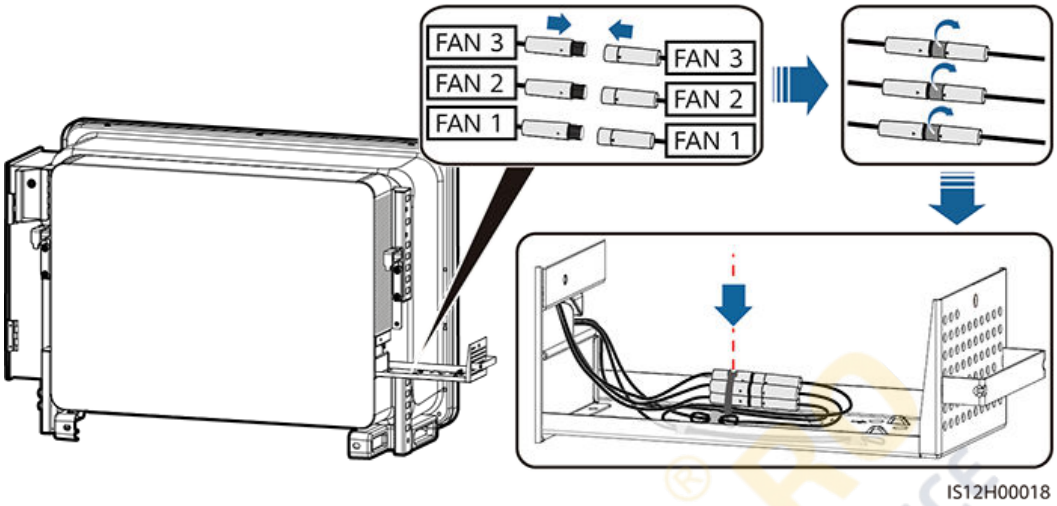

Step 10 Push the fan tray into the slot and tighten the screw.

Figure 8-17 Reinstalling the fan tray

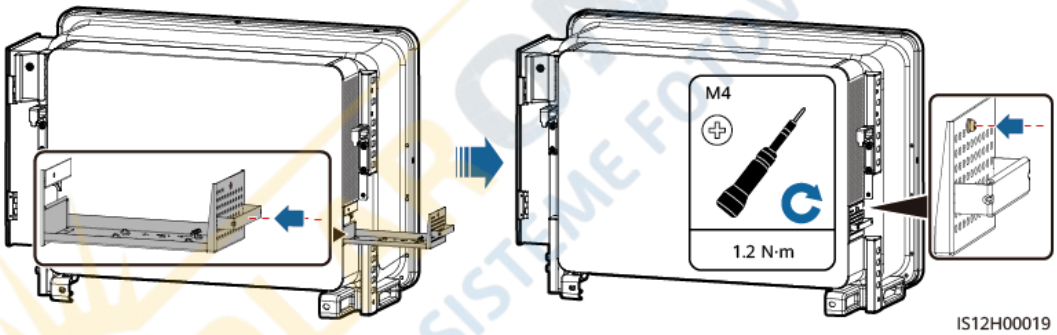

----End

8.6 Resetting and Turning On the DC Switch

Prerequisites

If internal inverter fault is displayed on the mobile app or remote monitoring system and the DC switch is OFF, the DC switch of the inverter has been automatically turned off. In this case, rectify the fault based on the alarm handling suggestions before turning on the DC switch.

Procedure

Step 1 Loosen the caps of the RESET buttons for the three DC switches, and press the RESET buttons inwards until you cannot go any further.

Step 2 Set the DC switches to **ON**.

Step 3 Tighten the caps of the RESET buttons.

Figure 8-18 Resetting and turning on the DC switch (DC SWITCH 1 is used as an example)

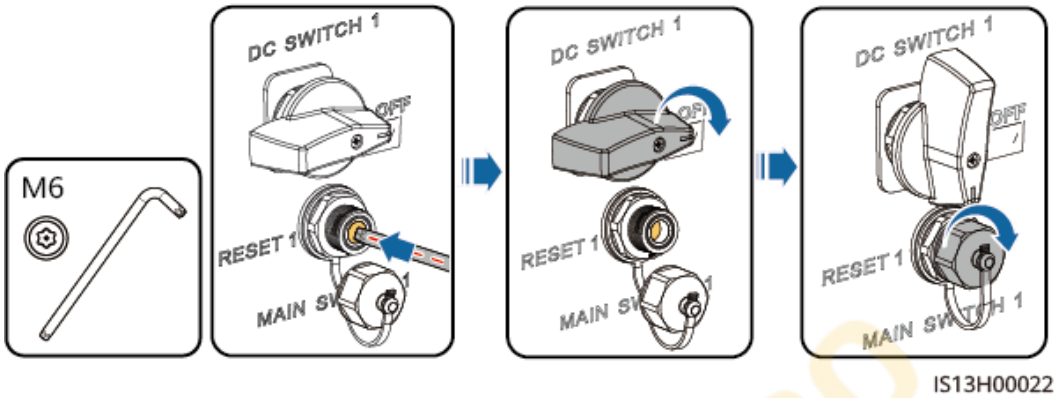

----End

9 Handling the Inverter

9.1 Removing the SUN2000

NOTICE

Before removing the SUN2000, disconnect both AC and DC connections.

Perform the following operations to remove the SUN2000:

1. Disconnect all cables from the SUN2000, including RS485 communications cables, DC input power cables, AC output power cables, and PGND cables.
2. Remove the SUN2000 from the mounting bracket.
3. Remove the mounting bracket.

9.2 Packing the SUN2000

- If the original packing materials are available, put the SUN2000 inside them and then seal them by using adhesive tape.
- If the original packing materials are not available, put the SUN2000 inside a suitable cardboard box and seal it properly.

9.3 Disposing of the SUN2000

If the SUN2000 service life expires, dispose of it according to the local disposal rules for electrical equipment waste.

 Copyright © Huawei Technologies Co., Ltd.

10 Technical Specifications

Efficiency

Item	SUN2000-125KTL-M0	SUN2000-110KTL-M0	SUN2000-100KTL-M0	SUN2000-100KTL-M1	SUN2000-100KTL-INM0	SUN2000-75KTL-M1
Maximum efficiency	≥ 99.0%	≥ 98.6%	≥ 98.6%	≥ 98.6% (380 V/400 V) and ≥ 98.8% (480 V)	≥ 98.6% (415 V) and ≥ 98.8% (480 V)	≥ 98.6% (380 V/400 V) and ≥ 98.8% (480 V)
Chinese efficiency	≥ 98.4%	≥ 98.2%	≥ 98.2%	-	-	-
European efficiency	-	-	-	≥ 98.4% (380 V/400 V) and ≥ 98.6% (480 V)	≥ 98.4% (415 V) and ≥ 98.6% (480 V)	≥ 98.3% (380 V/400 V) and ≥ 98.4% (480 V)

Input

Item	SUN2000-125KTL-M0	SUN2000-110KTL-M0	SUN2000-100KTL-M0	SUN2000-100KTL-M1	SUN2000-100KTL-INM0	SUN2000-75KTL-M1
Maximum input voltage[a]	1100 V					
Operating voltage range[b]	200–1000 V					

Item	SUN2000-125KTL-M0	SUN2000-110KTL-M0	SUN2000-100KTL-M0	SUN2000-100KTL-M1	SUN2000-100KTL-INM0	SUN2000-75KTL-M1
Minimum startup voltage	200 V					
Full-load MPPT voltage range	625–850 V	540–800 V	540–800 V	540–800 V (380 V/400 V) and 625–850 V (480 V)	540–800 V (415 V) and 625–850 V (480 V)	540–800 V (380 V/400 V) and 625–850 V (480 V)
Rated input voltage	750 V	600 V	600 V	570 V (380 V), 600 V (400 V) and 720 V (480 V)	620 V (415 V) and 720 V (480 V)	600 V (380 V/400 V) and 720 V (480 V)
Maximum short-circuit current (per MPPT)	40 A					
Maximum backfeed current to the PV array	0 A					
Number of inputs	20					
Number of MPP trackers	10					
Note a: The maximum input voltage is the upper threshold of the DC voltage. If the input voltage exceeds the threshold, the solar inverter may be damaged. Note b: If the input voltage is beyond the operating voltage range, the solar inverter cannot work properly.						

Output

Item	SUN2000-125KTL-M0	SUN2000-110KTL-M0	SUN2000-100KTL-M0	SUN2000-100KTL-M1	SUN2000-100KTL-INM0	SUN2000-75KTL-M1
Rated active power	125 kW	110 kW	100 kW	100 kW	100 kW	75 kW

Item	SUN2000-125KTL-M0	SUN2000-110KTL-M0	SUN2000-100KTL-M0	SUN2000-100KTL-M1	SUN2000-100KTL-INM0	SUN2000-75KTL-M1
Maximum apparent power	137.5 kVA	121 kVA	110 kVA	110 kVA	110 kVA	75 kVA
Maximum active power (cosϕ = 1)	137.5 kW	121 kW	110 kW	110 kW	110 kW	75 kW
Rated output voltage[a] (phase voltage/line voltage)	288 V/500 V, 3 W + PE	220 V/380 V and 230 V/400 V, 3 W + (N)[b] + PE	220 V/380 V, 230 V/400 V, 3 W + (N)[b] + PE	220 V/380 V, 230 V/400 V and 277 V/480 V, 3 W + (N)[b] + PE	240 V/415 V and 277 V/480 V, 3 W + (N)[b] + PE	220 V/380 V, 230 V/400 V and 277 V/480 V, 3 W + (N)[b] + PE
Rated output current	144.4 A	167.2 A (380 V) and 158.8 A (400 V)	152.0 A (380 V) and 144.4 A (400 V)	152.0 A (380 V), 144.4 A (400 V) and 120.3 A (480 V)	139.2 A (415 V) and 120.3 A (480 V)	113.6 A (380 V), 108.6 A (400 V) and 90.25 A (480 V)
Rated grid frequency	50 Hz	50 Hz/60 Hz	50 Hz/60 Hz	50 Hz/60 Hz	50 Hz/60 Hz	50 Hz/60 Hz
Maximum output current	160.4 A	185.7 A (380 V) and 176.4 A (400 V)	168.8 A (380 V) and 160.4 A (400 V)	168.8 A (380 V), 160.4 A (400 V) and 133.7 A (480 V)	154.6 A (415 V) and 133.7 A (480 V)	113.6 A (380 V), 108.6 A (400 V) and 90.25 A (480 V)
Power factor	0.8 leading and 0.8 lagging					
Maximum total harmonic distortion (rated power)	< 3%					

Note a: The rated output voltage is determined by **Grid code**, which can be set on the SUN2000 app, SmartLogger, or NMS.

Note b: You can determine whether to connect the neutral wire to the SUN2000-110KTL-M0, SUN2000-100KTL-M0, SUN2000-100KTL-M1, SUN2000-100KTL-INM0, or SUN2000-75KTL-M1 based on the application scenario. If no neutral wire is used, set **Output mode** to **Three-phase three-wire**. If the neutral wire is used, set the **Output mode** to **Three-phase four-wire**.

 Copyright © Huawei Technologies Co., Ltd.

Protection

Item	SUN2000-125KTL-M0	SUN2000-110KTL-M0	SUN2000-100KTL-M0	SUN2000-100KTL-M1	SUN2000-100KTL-INM0	SUN2000-75KTL-M1
AFCI	-			Optional	-	-
Input DC switch	Supported					
Anti-islanding protection	Supported					
Output overcurrent protection	Supported					
Input reverse connection protection	Supported					
PV string fault detection	Supported					
DC surge protection	Supported					
AC surge protection	Supported					
Insulation resistance detection	Supported					
Residue current monitoring unit (RCMU)	Supported					
Overvoltage category	PV II/AC III					

SOLARONE.RO® SISTEME FOTOVOLTAICE

Display and Communication

Item	SUN2000-125KTL-M0	SUN2000-110KTL-M0	SUN2000-100KTL-M0	SUN2000-100KTL-M1	SUN2000-100KTL-INM0	SUN2000-75KTL-M1
Display	LED indicators, WLAN module + app, Bluetooth module + app, USB data cable + app					
Communication	MBUS/ RS485	MBUS/ RS485	MBUS/ RS485	RS485	MBUS/ RS485	MBUS/ RS485

Common Parameters

Item	SUN2000-125KTL-M0	SUN2000-110KTL-M0	SUN2000-100KTL-M0	SUN2000-100KTL-M1	SUN2000-100KTL-INM0	SUN2000-75KTL-M1
Dimensions (W x H x D)	1035 mm×700 mm×365 mm					
Net weight	≤ 81 kg	≤ 90 kg				
Operating temperature	–25°C to +60°C					
Cooling mode	Intelligent air cooling					
Highest operating altitude	4000 m					
Relative humidity	0%–100% RH					
Input terminal[1]	Amphenol Helios H4					
Output terminal	Crimping module + OT/DT terminal					
IP rating	IP66					
Topology	Transformerless					
Note [1]: Some devices use Staubli MC4 connectors.						

 Copyright © Huawei Technologies Co., Ltd.

A Grid Codes

NOTE

The grid codes are subject to change. The listed codes are for reference only.

Set the correct grid code based on the application area and scenario of the inverter.

Grid Code	Description (Country/ Region/ Standard/ Others)	SUN2000-125KTL-M0	SUN2000-110KTL-M0	SUN2000-100KTL-M0	SUN2000-100KTL-M1	SUN2000-100KTL-INM0	SUN2000-75KTL-M1
VDE-AR-N-4105	Germany low-voltage power grid	-	-	-	Supported	-	-
NB/T 32004	China Golden Sun low-voltage power grid	-	Supported	Supported	Supported	-	-
UTE C 15-712-1(A)	France mainland power grid	-	-	-	Supported	-	-
UTE C 15-712-1(B)	France island power grid	-	-	-	Supported	-	-
UTE C 15-712-1(C)	France island power grid	-	-	-	Supported	-	-

 Copyright © Huawei Technologies Co., Ltd.

Grid Code	Description (Country/ Region/ Standard/ Others)	SUN2000-125KTL-M0	SUN2000-110KTL-M0	SUN2000-100KTL-M0	SUN2000-100KTL-M1	SUN2000-100KTL-INM0	SUN2000-75KTL-M1
VDE 0126-1-1-BU	Bulgaria power grid	-	-	-	Supported	-	-
VDE 0126-1-1-GR(A)	Greece mainland power grid	-	-	-	Supported	-	-
VDE 0126-1-1-GR(B)	Greece island power grid	-	-	-	Supported	-	-
BDEW-MV	Germany medium-voltage power grid	-	-	-	Supported	-	-
G59-England	England 230 V power grid (I > 16 A)	-	-	-	Supported	-	-
G59-Scotland	Scotland 240 V power grid (I > 16 A)	-	-	-	Supported	-	-
G83-England	England 230 V power grid (I < 16 A)	-	-	-	Supported	-	-
G83-Scotland	Scotland 240 V power grid (I < 16 A)	-	-	-	Supported	-	-
CEI0-21	Italy power grid	-	-	-	Supported	-	-
EN50438-CZ	Czech Republic power grid	-	-	-	Supported	-	-
RD1699/661	Spain low-voltage power grid	-	-	-	Supported	-	-

Grid Code	Description (Country/ Region/ Standard/ Others)	SUN2000-125KTL-M0	SUN2000-110KTL-M0	SUN2000-100KTL-M0	SUN2000-100KTL-M1	SUN2000-100KTL-INM0	SUN2000-75KTL-M1
RD1699/661-MV480	Spain medium-voltage power grid	-	-	-	Supported	-	-
EN50438-NL	Netherlands power grid	-	-	-	Supported	-	-
C10/11	Belgium power grid	-	-	-	Supported	-	-
AS4777	Australia power grid	-	-	-	Supported	-	-
IEC61727	IEC61727 low-voltage power grid (50 Hz)	-	-	-	Supported	Supported	-
Custom (50 Hz)	Reserved	-	Supported	Supported	Supported	Supported	-
Custom (60 Hz)	Reserved	-	Supported	Supported	Supported	Supported	-
CEI0-16	Italy power grid	-	-	-	Supported	-	-
CHINA-MV	China medium-voltage power grid	-	Supported	Supported	Supported	-	-
TAI-PEA	Thailand PEA power grid	-	-	-	Supported	-	-
TAI-MEA	Thailand MEA power grid	-	-	-	Supported	-	-
BDEW-MV480	Germany medium-voltage power grid	-	-	-	Supported	-	-

 Copyright © Huawei Technologies Co., Ltd.

Grid Code	Description (Country/ Region/ Standard/ Others)	SUN2000-125KTL-M0	SUN2000-110KTL-M0	SUN2000-100KTL-M0	SUN2000-100KTL-M1	SUN2000-100KTL-INM0	SUN2000-75KTL-M1
Custom MV480 (50 Hz)	Reserved	Supported	-	-	Supported	-	-
Custom MV480 (60 Hz)	Reserved	Supported	-	-	Supported	-	-
G59-England-MV480	UK 480 V medium-voltage power grid (I > 16 A)	-	-	-	Supported	-	-
IEC61727-MV480	IEC61727 medium-voltage power grid (50 Hz)	-	-	-	Supported	Supported	-
UTE C 15-712-1-MV480	France island power grid	-	-	-	Supported	-	-
TAI-PEA-MV480	Thailand PEA medium-voltage power grid	-	-	-	Supported	-	-
TAI-MEA-MV480	Thailand MEA medium-voltage power grid	-	-	-	Supported	-	-
EN50438-DK-MV480	Denmark medium-voltage power grid	-	-	-	Supported	-	-
C11/C10-MV480	Belgium medium-voltage power grid	-	-	-	Supported	-	-

 Copyright © Huawei Technologies Co., Ltd.

Grid Code	Description (Country/ Region/ Standard/ Others)	SUN2000-125KTL-M0	SUN2000-110KTL-M0	SUN2000-100KTL-M0	SUN2000-100KTL-M1	SUN2000-100KTL-INM0	SUN2000-75KTL-M1
Philippines	Philippines low-voltage power grid	-	-	-	Supported	-	-
Philippines-MV480	Philippines medium-voltage power grid	-	-	-	Supported	-	-
AS4777-MV480	Australia medium-voltage power grid	-	-	-	Supported	-	-
NRS-097-2-1	South Africa power grid	-	-	-	Supported	-	-
NRS-097-2-1-MV480	South Africa medium-voltage power grid	-	-	-	Supported	-	-
KOREA	South Korea power grid	-	-	-	Supported	-	-
IEC61727-60Hz	IEC61727 low-voltage power grid (60 Hz)	-	-	-	Supported	Supported	-
IEC61727-60Hz-MV480	IEC61727 medium-voltage power grid (60 Hz)	-	-	-	Supported	Supported	-
CHINA_MV500	China medium-voltage power grid	Supported	-	-	-	-	-

Grid Code	Description (Country/ Region/ Standard/ Others)	SUN2000-125KTL-M0	SUN2000-110KTL-M0	SUN2000-100KTL-M0	SUN2000-100KTL-M1	SUN2000-100KTL-INM0	SUN2000-75KTL-M1
ANRE	Romania low-voltage power grid	-	-	-	Supported	-	-
ANRE-MV480	Romania medium-voltage power grid	-	-	-	Supported	-	-
PO12.3-MV480	Spain medium-voltage power grid	-	-	-	Supported	-	-
EN50438_IE-MV480	Ireland medium-voltage power grid	-	-	-	Supported	-	-
EN50438_IE	Ireland low-voltage power grid	-	-	-	Supported	-	-
IEC61727-50Hz-MV500	India 500 V medium-voltage power grid	-	-	-	-	Supported	-
CEI0-16-MV480	Italy medium-voltage power grid	-	-	-	Supported	-	-
PO12.3	Spain low-voltage power grid	-	-	-	Supported	-	-
CEI0-21-MV480	Italy medium-voltage power grid	-	-	-	Supported	-	-

 Copyright © Huawei Technologies Co., Ltd.

Grid Code	Description (Country/ Region/ Standard/ Others)	SUN2000-125KTL-M0	SUN2000-110KTL-M0	SUN2000-100KTL-M0	SUN2000-100KTL-M1	SUN2000-100KTL-INM0	SUN2000-75KTL-M1
KOREA-MV480	South Korea medium-voltage power grid	-	-	-	Supported	-	-
EN50549-LV	Ireland power grid	-	-	-	Supported	-	-
EN50549-MV480	Ireland medium-voltage power grid	-	-	-	Supported	-	-
ABNT NBR 16149	Brazil power grid	-	-	-	Supported	-	Supported
ABNT NBR 16149-MV480	Brazil medium-voltage power grid	-	-	-	Supported	-	Supported
INDIA	India low-voltage power grid	-	-	-	-	Supported	-
INDIA-MV500	India medium-voltage power grid	-	-	-	-	Supported	-
SA_RPPs	South Africa low-voltage power grid	-	-	-	Supported	-	-
SA_RPPs-MV480	South Africa medium-voltage power grid	-	-	-	Supported	-	-
Malaysian	Malaysia low-voltage power grid	-	-	-	Supported	-	-

 Copyright © Huawei Technologies Co., Ltd.

Grid Code	Description (Country/ Region/ Standard/ Others)	SUN2000-125KTL-M0	SUN2000-110KTL-M0	SUN2000-100KTL-M0	SUN2000-100KTL-M1	SUN2000-100KTL-INM0	SUN2000-75KTL-M1
Malaysian-MV480	Malaysia medium-voltage power grid	-	-	-	Supported	-	-
Northern Ireland	Northern Ireland low-voltage power grid	-	-	-	Supported	-	-
Northern Ireland-MV480	Northern Ireland medium-voltage power grid	-	-	-	Supported	-	-
VDE-AR-N4120_HV	VDE4120 standard power grid	-	-	-	Supported	Supported	-
VDE-AR-N4120_HV480	VDE4120 standard power grid	-	-	-	Supported	Supported	-
Vietnam	Vietnam power grid	-	-	-	Supported	-	-
Vietnam-MV480	Vietnam power grid	-	-	-	Supported	-	-
TAIPOWER	Taiwan Power low-voltage power grid	-	-	-	Supported	-	-
TAIPOWER-MV480	Taiwan Power medium-voltage power grid	-	-	-	Supported	-	-
BANGLADESH	Bangladesh low-voltage power grid	-	-	-	Supported	-	-

 Copyright © Huawei Technologies Co., Ltd.

Grid Code	Description (Country/ Region/ Standard/ Others)	SUN2000-125KTL-M0	SUN2000-110KTL-M0	SUN2000-100KTL-M0	SUN2000-100KTL-M1	SUN2000-100KTL-INM0	SUN2000-75KTL-M1
BANGLADESH-MV480	Bangladesh medium-voltage power grid	-	-	-	Supported	-	-
EN50438-NL-MV480	Netherlands medium-voltage power grid	-	-	-	Supported	-	-
Fuel_Engine_Grid	Diesel generator hybrid power grid	-	Supported	Supported	Supported	Supported	-
Fuel-Engine-Grid-60Hz	Diesel generator hybrid power grid	-	Supported	Supported	Supported	Supported	-
EN50438-SE	Sweden low-voltage power grid	-	-	-	Supported	-	-
Pakistan	Pakistan power grid	-	-	-	Supported	-	-
Pakistan-MV480	Pakistan medium-voltage power grid	-	-	-	Supported	-	-
Austria	Austria power grid	-	-	-	Supported	-	-
Austria-MV480	Austria medium-voltage power grid	-	-	-	Supported	-	-
G99-TYPEA-LV	UK G99_TypeA_LV power grid	-	-	-	Supported	-	-

Grid Code	Description (Country/ Region/ Standard/ Others)	SUN2000-125KTL-M0	SUN2000-110KTL-M0	SUN2000-100KTL-M0	SUN2000-100KTL-M1	SUN2000-100KTL-INM0	SUN2000-75KTL-M1
G99-TYPEB-LV	UK G99_TypeB_LV power grid	-	-	-	Supported	-	-
G99-TYPEB-HV	UK G99_TypeB_HV power grid	-	-	-	Supported	-	-
G99-TYPEB-HV-MV480	UK G99_TypeB_HV medium-voltage power grid	-	-	-	Supported	-	-
G99-TYPEA-HV	UK G99_TypeA_HV power grid	-	-	-	Supported	-	-
EN50549-MV400	Ireland power grid	-	-	-	Supported	-	-
VDE-AR-N4110	Germany medium-voltage power grid	-	-	-	Supported	Supported	-
VDE-AR-N4110-MV480	Germany medium-voltage power grid	-	-	-	Supported	Supported	-
NTS	Spain power grid	-	-	-	Supported	-	-
NTS-MV480	Spain medium-voltage power grid	-	-	-	Supported	-	-
C10/11-MV400	Belgium medium-voltage power grid	-	Supported	-	Supported	-	-

 Copyright © Huawei Technologies Co., Ltd.

Grid Code	Description (Country/ Region/ Standard/ Others)	SUN2000-125KTL-M0	SUN2000-110KTL-M0	SUN2000-100KTL-M0	SUN2000-100KTL-M1	SUN2000-100KTL-INM0	SUN2000-75KTL-M1
CEA	India CEA low-voltage power grid	-	-	-	-	Supported	-
CEA-MV480	India CEA medium-voltage power grid	-	-	-	-	Supported	-
EN50549-SE	Sweden low-voltage power grid	-	-	-	Supported	-	-
DENMARK-EN50549-DK1-LV230	Denmark power grid	-	-	-	Supported	-	-
DENMARK-EN50549-DK2-LV230	Denmark power grid	-	-	-	Supported	-	-
SINGAPORE	Singapore low-voltage power grid	-	-	-	Supported	-	-
SINGAPORE-MV480	Singapore medium-voltage power grid	-	-	-	Supported	-	-
CZECH-EN50549-LV230	Czech Republic power grid	-	-	-	Supported	-	-
CZECH-EN50549-MV480	Czech Republic power grid	-	-	-	Supported	-	-

B Resetting Password

Step 1 Check that the AC and DC sides of the inverter are both powered on, and indicators and are steady green or blinking slowly for more than 3 minutes.

Step 2 Turn off the AC switch, set the DC SWITCH at the bottom of the inverter to OFF, and wait until all LED indicators on the inverter panel turn off.

Step 3 Complete the following operations within 4 minutes:

1. Turn on the AC switch and wait for about 90s or until the inverter indicator blinks.
2. Turn off the AC switch and wait about 30s or until all LED indicators on the inverter panel turn off.
3. Turn on the AC switch and wait for about 90s or until the inverter indicator blinks.

Step 4 Log in to the app and reset the password within 10 minutes. (If no operation is performed within 10 minutes, all parameters of the inverter remain unchanged.)

----End

NOTICE

- SUN2000 V500R001C00SPC126 and later versions support password reset.
- SUN2000ME V500R023C00SPC020 and later versions support password reset.
- You are advised to reset the password in the morning or at night when the solar irradiance is low.

 Copyright © Huawei Technologies Co., Ltd.

C Domain Name List of Management Systems

NOTE

The list is subject to change.

Table C-1 Domain names of management systems

Domain Name	Data Type	Scenario
intl.fusionsolar.huawei.com	Public IP address	FusionSolar hosting cloud **NOTE** The domain name is compatible with cn.fusionsolar.huawei.com (Chinese mainland).

 Copyright © Huawei Technologies Co., Ltd.

D Contact Information

If you have any questions about this product, please contact us.

Table D-1 Customer service contact information

Region	Country/Region	Email	Tel
Europe	France	eu_inverter_support@huawei.com	0080033888888
	Germany		
	Spain		
	Italy		
	United Kingdom		
	Netherlands		
	Others	For details, visit solar.huawei.com.	
Asia Pacific	Australia	eu_inverter_support@huawei.com	1800046639
	Türkiye	eu_inverter_support@huawei.com	-
	Malaysia	apsupport@huawei.com	0080021686868 /1800220036
	Thailand		(+66) 26542662 (charged at local call rates)
			1800290055 (free in Thailand)
	China	solarservice@huawei.com	400-822-9999
	Others	apsupport@huawei.com	0060-3-21686868

 Copyright © Huawei Technologies Co., Ltd.

Region	Country/ Region	Email	Tel
Japan	Japan	solarsupportjp@huawei.com	0120258367
India	India	indiaenterprise_TAC@huawei.com	1800 103 8009
South Korea	South Korea	koreainverter@huawei.com	-
North America	United States	eu_inverter_support@huawei.com	1-877-948-2934
	Canada	eu_inverter_support@huawei.com	1-855-482-9343
Latin America	Mexico	la_inverter_support@huawei.com	018007703456 /0052-442-4288288
	Argentina		0-8009993456
	Brazil		0-8005953456
	Chile		800201866 (only available on fixed-line)
	Others		0052-442-4288288
Middle East and Africa	Egypt	eu_inverter_support@huawei.com	08002229000 /0020235353900
	United Arab Emirates		08002229000
	South Africa		0800222900
	Saudi Arabia		8001161177
	Pakistan		0092512800019
	Morocco		0800009900
	Others		0020235353900

NOTE

EU Representative Information: Huawei Technologies Hungary Kft.
Add.: HU-1133 Budapest, Váci út 116-118., 1. Building, 6. floor.
Email: hungary.reception@huawei.com

E Acronyms and Abbreviations

C

CEC	California Energy Commission
CPV	Concentrated Photovoltaics technology

L

LED	light emitting diode

M

MBUS	monitoring bus
MPP	maximum power point
MPPT	maximum power point tracking

P

PID	potential induced degradation
PV	photovoltaic

SOLARONE.RO SISTEME FOTOVOLTAICE

R

RCMU	residual current monitoring unit

W

WEEE	waste electrical and electronic equipment

SOLARONE.RO SISTEME FOTOVOLTAICE