M-ELV Battery

MS-7K-U User Manual

SOLARONE.RO
SISTEME FOTOVOLTAICE

ATMOCE

About This Document

Corporate Contact Information

Company: ATMOCE Holding B.V.

Address: Rokin 92-96, 1012 KZ Amsterdam, the Netherlands

Email: support@atmoce.com

Telephone: +31 20 241 6207

Disclaimer

- Product information is subject to change without prior notice. Every effort has been made in the preparation of this document to ensure accuracy of the content, but all statements, information, and recommendations in this document do not constitute a warranty of any kind, express or implied.
- For optimum reliability and to meet warranty requirements, this product must be installed in accordance with the instructions in this manual.
- For more information about the warranty, Visit https://www.atmoce.com/en/policy/warranty-policy

Applicable Scope

- This manual is intended for professional installation and maintenance personnel only.
- This manual mainly introduces the assembly, installation, configuration, maintenance, and troubleshooting methods of the following types of battery: MS-7K-U

Revision History

	Date	Version	Description
1	2025-12-01	Rev. 1.0.2	1. Revise the diagram of 5.2.3 Recharging step. 2. Replace the expansion screws with M8 ones and change the drill bit to Φ12.
2	2025-08-23	Rev. 1.0.1	1. Revise the voltage range of the M-ELV Battery. 2. Revise the battery system introduction. 3. Revise the nameplate information. 4. Revise the items of the package list. 5. Revise the installation steps. 6. Add the description of the self-consumption mode and TOU mode. 7. Add the notes of the SoC. 8. Revise the information of the data sheet.
3	2025–04–11	Rev. 1.0.0	1. First release

SOLARONE.RO® SISTEME FOTOVOLTAICE

Contents

About This Document

Corporate Contact Information I

Disclaimer I

Applicable Scope I

Revision History II

Contents III

Safety Information 01

1.1 Statement 01

1.2 Safety Labels 01

1.3 Personal safety instructions 02

1.4 Battery Safety Instructions 03

1.5 Cable Safety Instructions 04

1.6 Environment Instructions 05

Product Information 06

2.1 M-ELV Battery Introduction 06

Storage Requirements 12

Installation 13

4.1 Pre-installation Requirements 13

4.2 Take out the M-ELV Battery 16

4.3 Mount the M-ELV Battery 17

4.4 Remove the Cover of the Wiring Cabinet 21

4.5 Remove the Knockout 22

4.6 Wire the Cables 23

4.7 Close the Cover of the Wiring Cabinet 28

4.8 Remove the Knockout of the Upper Cover 29

4.9 Close the Upper Cover 29

4.10 Power on the System 30

4.11 Activate the System 30

SOLARONE.RO SISTEME FOTOVOLTAICE

Contents

Operation and Maintenance 31

5.1 M-ELV Battery Working Mode 31

5.2 M-ELV Battery Recharging Operating Instructions 33

5.3 Preconditioning 34

Troubleshooting 35

6.1 LED Indicator Description 35

6.2 Check the Alert Codes 36

6.3 Alert Codes List 37

Technical Data 40

7.1 M-ELV Battery Data Sheet 45

Appendix 1: Recommended wire diameter 42

Appendix 2: Terms and Abbreviations 43

SOLARONE.RO SISTEME FOTOVOLTAICE

Safety Information

1.1 Statement

- Before installing or using the M-ELV Battery , please carefully read the user manual, all instructions, safety labels on the product, and any available safety manuals. Failure to follow these safety instructions may result in personal injury, damage to the equipment, or invalidation of the warranty.
- DANGER, WARNING, CAUTION, and NOTE in this manual must be adhered to. You must also comply with relevant international, national, or regional standards and industry practices. M-ELV Battery assumes no responsibility for any violation of safe operation requirements or safety standards regarding the design, manufacture, and use of the equipment.
- This equipment should only be used in environments that meet its design specifications; any failure, abnormal operation, or damage to components arising from non-compliance will not be covered by the warranty.
- All operations including transportation, storage, installation, operation, use, maintenance, etc., should comply with applicable laws, regulations, standards, and specifications.

1.2 Safety Labels

To reduce the risk of electric shock and ensure the safe installation and operation of the M-ELV Battery system, the following safety symbols are used throughout this manual to indicate hazardous conditions and important safety instructions:

Danger	A label indicates a hazard with a high level of risk. Failure to avoid this hazard may result in serious personal injury or death.
Warning	A label indicates a hazard with a medium level of risk. Failure to avoid this hazard may result in serious personal injury or death.
Caution	A label indicates a hazard with a low level of risk. Failure to avoid this hazard may result in serious personal injury or death.
Note	A label indicates a safety hazard or risk of device damage. Failure to avoid this hazard may result in equipment damage, data loss, reduced performance, or other consequences, but does not involve personal injury.

© 2025 ATMOCE Holding B.V. All rights reserved.

1.3 Personal Safety Instructions

Danger

- **No live electrical work:** The installation process must never be performed with live electricity. It is prohibited to install or remove cables while the system is energized. If the cable core comes into contact with the conductor, it can cause electric arcs or sparks, which can lead to fire or personal injury.
- **Risk of Fire or Electric Shock:** When the equipment is powered on, improper or unregulated operation can result in fire, electric shock, or explosion, potentially causing injury, death, or property damage.
- **Work with Assistance:** Always have someone nearby when working with electrical equipment. They should be within earshot or close enough to assist in case of emergency. Remove any metal jewelry (rings, bracelets, necklaces, watches) when working with the M-ELV Battery or any electrical components.
- **Power Off Before Installation:** Do not apply power to the equipment until installation is fully completed and verified by a qualified person.

Warning

- **Use Personal Protective Equipment (PPE):** Ensure that all workers use appropriate protective gear, such as protective clothing, insulated footwear, goggles, helmets, and insulated gloves, during installation or maintenance operations.
- **Adhere to Warnings and Precautions:** Never ignore warnings, cautions, or precautionary measures indicated in the manuals or on the equipment itself.
- **Take Immediate Action in Case of Malfunction:** If any malfunction is detected during operation that could lead to personal injury or equipment damage, immediately stop the operation, report it to the supervisor, and implement the necessary safety measures.

Note

- **Proper Installation by Qualified Personnel Only:** Installation and maintenance must only be performed by trained professionals. M-ELV Battery is not liable for any loss or damage caused by improper use, installation, or misuse of the product.
- **Training Requirements:** Personnel responsible for the installation and maintenance of the M-ELV Battery must undergo proper training to ensure they understand safe operation methods, relevant safety precautions, and local standards and regulations.

© 2025 ATMOCE Holding B.V. All rights reserved.

1.4 Battery Safety Instructions

Danger

- **Unauthorized Repair Prohibited:** Do not attempt to repair the M-ELV Battery without authorization, as it contains no user-repairable components. Unauthorized disassembly, repair, or destruction of the device will void the warranty. In case of malfunction, please contact Atmoce for technical assistance.
- **Authorized Use Only:** Only use the M-ELV Battery as specified by Atmoce. Unauthorized use may result in equipment damage or personal injury.
- **Use Approved Accessories Only:** Only use accessories approved by Atmoce. The use of unauthorized accessories may cause equipment damage or personal injury.
- **Power Off Before Work:** Since the M-ELV Battery is powered by multiple sources, ensure all circuit breakers are turned off before starting any installation, maintenance, or cleaning work.
- **Do Not Operate If Damaged:** Do not operate the M-ELV Battery if its appearance or internal components are damaged. Ensure the device is intact before use.

Warning

- **Inspect Cables and Connectors:** Regularly inspect cables and connectors to ensure they are in good condition. Do not operate the M-ELV Battery with damaged or non-compliant cables or connectors.
- **Do Not Disassemble the Enclosure:** Do not disassemble the M-ELV Battery enclosure or protective panels unless necessary for maintenance.

Note

- **Compliance with Installation Regulations:** When installing the M-ELV Battery , ensure compliance with all applicable installation standards and local electrical regulations.
- **Temperature Limitations:** The M-ELV Battery is suitable for use in environments with a maximum ambient temperature of 55°C. Ensure the installation environment meets this temperature limit.
- **Use of Suitable Wiring:** When installing the M-ELV Battery , use copper wiring with a temperature resistance of 90°C or higher. Ensure the wiring meets local electrical standards.
- **Cable and Connector Safety:** Choose cables that meet safety requirements based on circuit breaker parameters. Ensure cables and connectors are in good condition and operate within rated specifications.
- **Grid Connection:** Do not connect the M-ELV Battery to the grid or AC circuit until all installation steps are completed and approval has been obtained from the utility company.

© 2025 ATMOCE Holding B.V. All rights reserved.

1.5 Cable Safety Instructions

Danger

- **Disconnect Power Before Installation:** Do not attempt to install or work with cables unless the circuit is disconnected. Always ensure the power is off before working on any electrical connections.
- **Avoid Damaging the Cable:** Take care not to damage the copper conductor of the cable when stripping the sheath. Damaged wires may result in improper system functionality or failure.

Warning

- **Check AC and DC Wiring:** Ensure that all AC wiring are correct and free of any pinches, shorts, or damage. Verify that all AC junction boxes are properly closed and secured.
- **Ensure Proper Cable Connections:** All cables must be securely connected, well-insulated, and meet the appropriate specifications for the system.

Note

- **Compliance with Local Standards:** Cable selection and routing must comply with local laws, regulations, and industry standards.
- **Respect Cable Bending Radius:** When routing cables, ensure the minimum bending radius is 8x the cable's outer diameter (8xOD).
- **Replace Insufficient Cable Length:** If the power cable length is found to be insufficient, replace it with a properly sized cable. Joints or welding points in the power cable are strictly prohibited.
- **Avoid Tension on Cable Terminal:** Do not expose cable terminals to continuous tension. Avoid pulling or bending the cable at the connection points.
- **Smooth Cable Crossing Holes:** Ensure that cable crossing holes are free of sharp edges to prevent damage from burrs or other sharp objects.
- **Keep the Wire Cabinet Clean:** Always keep the wire cabinet free from dirt, debris, and contaminants. Prevent dirt or debris from entering the connectors during installation and operation.
- **Compliance with Local Regulations:** Ensure all installations and maintenance comply with national and local electrical regulations.

© 2025 ATMOCE Holding B.V. All rights reserved.

1.6 Environment Instructions

Danger

- **Avoid Hazardous Environments:** Do not place the M-ELV Battery in environments with flammable or explosive gases, vapors, or fumes. Never perform any operations in such environments.
- **Explosion Risk:** Do not install or use the M-ELV Battery in a potentially explosive environment. Ensure the equipment is not exposed to conditions that could lead to combustion or detonation.
- **Heat and Ignition Sources:** Avoid placing the equipment near heat sources, such as fireworks, candles, heaters, or other devices that generate heat. The heat produced by the equipment may cause damage or create a fire hazard.
- **Avoid Direct Sunlight Exposure:** Do not expose terminals or connectors to direct sunlight, as this may lead to overheating or degradation of materials.

Warning

- **Weather Conditions:** Do not attempt to install or use the M-ELV Battery in adverse weather conditions, including rain, snow, or extreme temperatures. Ensure the equipment is installed in dry, stable conditions.
- **Protect from Pressurized Liquids:** Do not expose terminals or connectors to directed pressurized liquids (e.g., water jets). Ensure the equipment is shielded from water or other liquids.
- **Avoid Immersion in Liquids:** Never immerse the terminals, connectors, or any part of the M-ELV Battery in liquid, as this could cause malfunction or permanent damage.
- **Corrosive and Volatile Environments:** Do not install the M-ELV Battery in areas with volatile gases, corrosive substances, or organic solvents. Such environments could degrade the equipment or create safety hazards.
- **Avoid Harsh Environmental Factors:** Do not install the M-ELV Battery in areas subject to strong vibrations, excessive noise, or strong electromagnetic field interference.
- **Sturdy Mounting Surface:** Ensure that the mounting surface for the M-ELV Battery is stable and capable of bearing the equipment's weight. Proper installation on a secure surface prevents equipment malfunction or damage.
- **Remove Packing Materials:** After installation, ensure that all packaging materials such as cardboard boxes, foam, plastic, and cable ties are removed from the equipment area to maintain a clean and safe environment.

© 2025 ATMOCE Holding B.V. All rights reserved.

Product Information

2.1 M-ELV Battery Introduction

2.1.1 Overview

The ATMOCE MS-7K-U battery is a fully integrated system with a usable energy capacity of 7.0 kWh. It supports on-grid systems, offering self-consumption, TOU and grid ancillary services modes that enables homeowners to achieve energy independence by generating and utilizing their energy while participating in grid services.

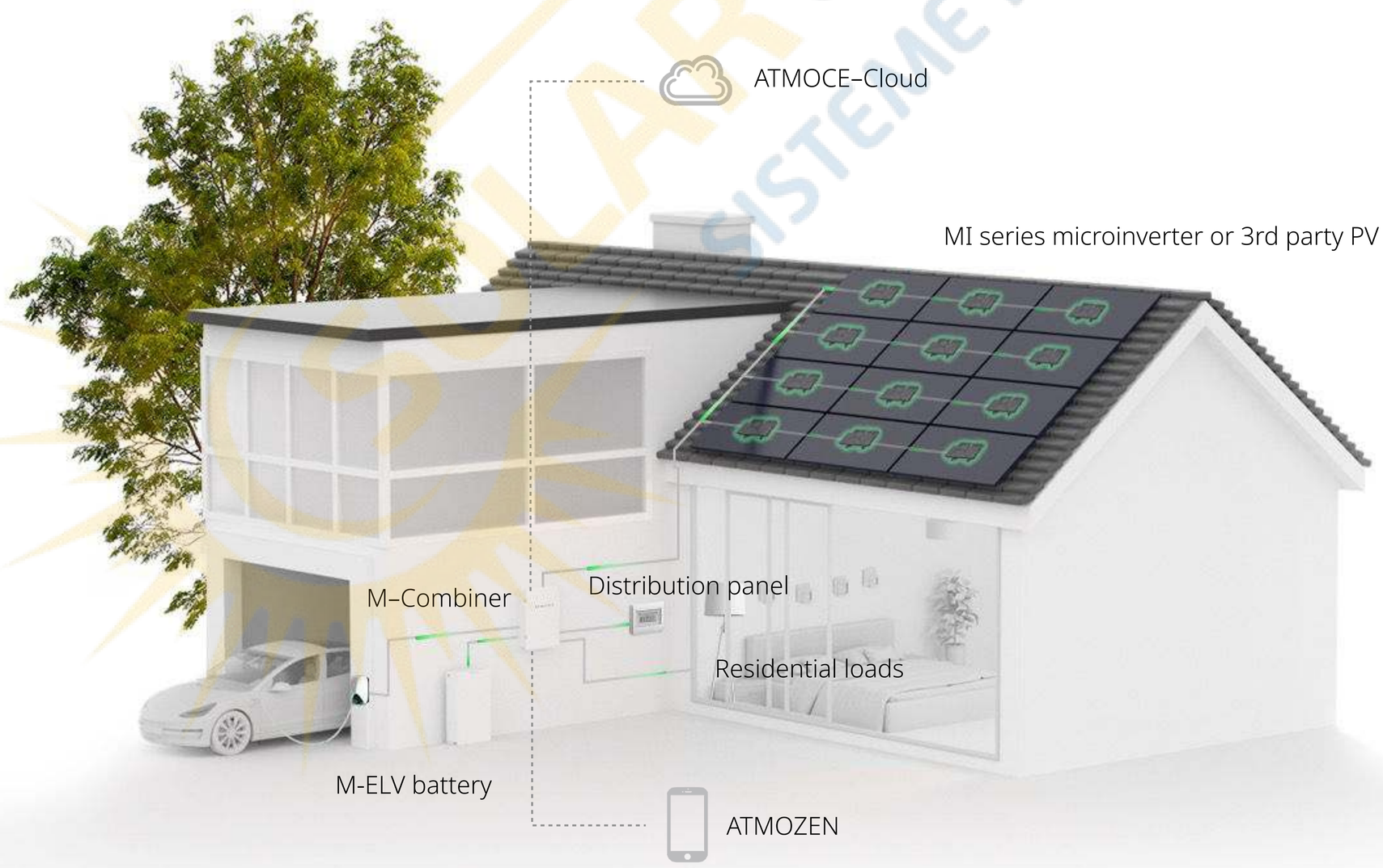

© 2025 ATMOCE Holding B.V. All rights reserved.

2.1.2 Structure dimension

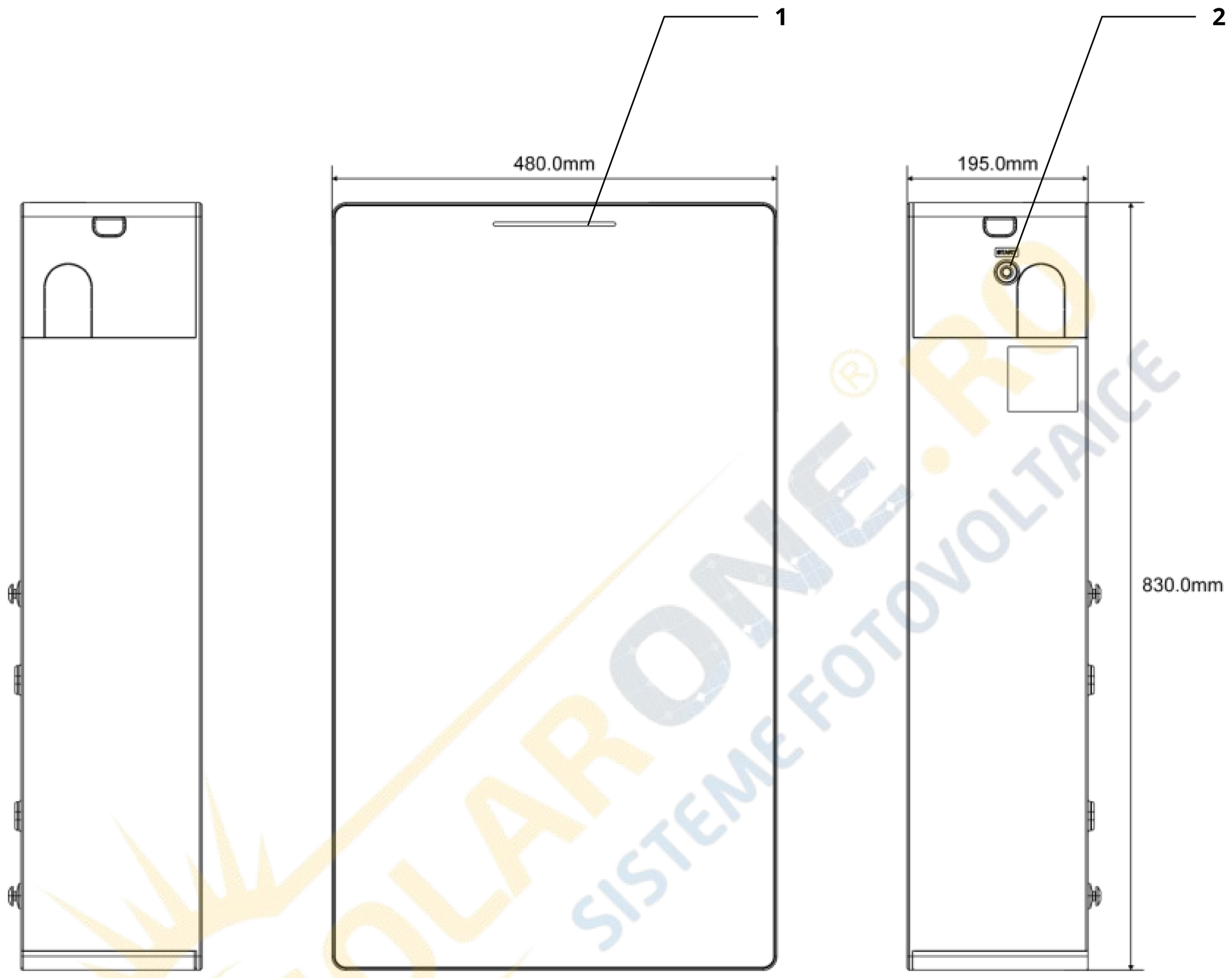

1. LED indicator
2. Black start button

© 2025 ATMOCE Holding B.V. All rights reserved.

2.1.3 Battery structure introduction

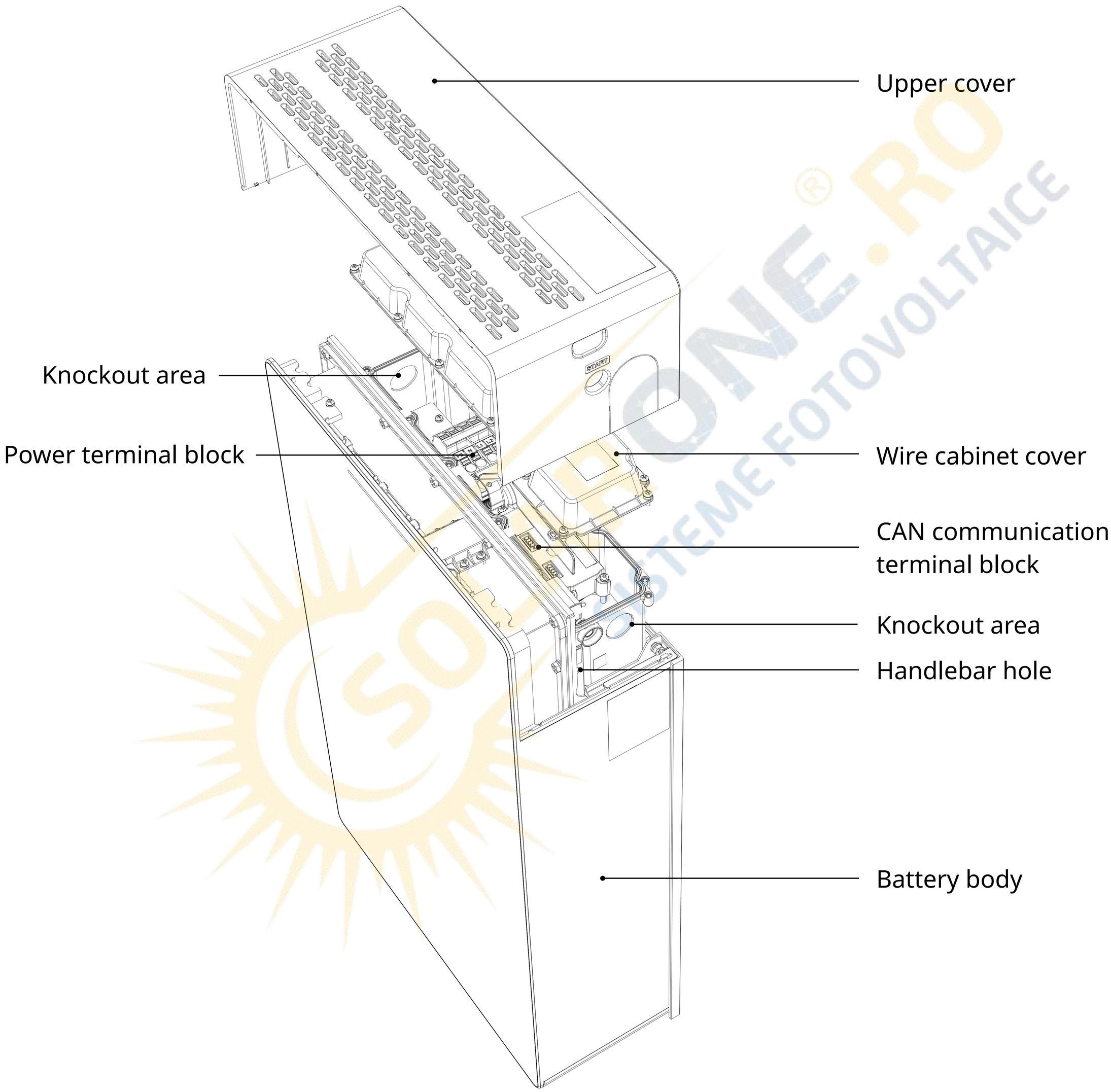

© 2025 ATMOCE Holding B.V. All rights reserved.

2.1.4 Label introduction

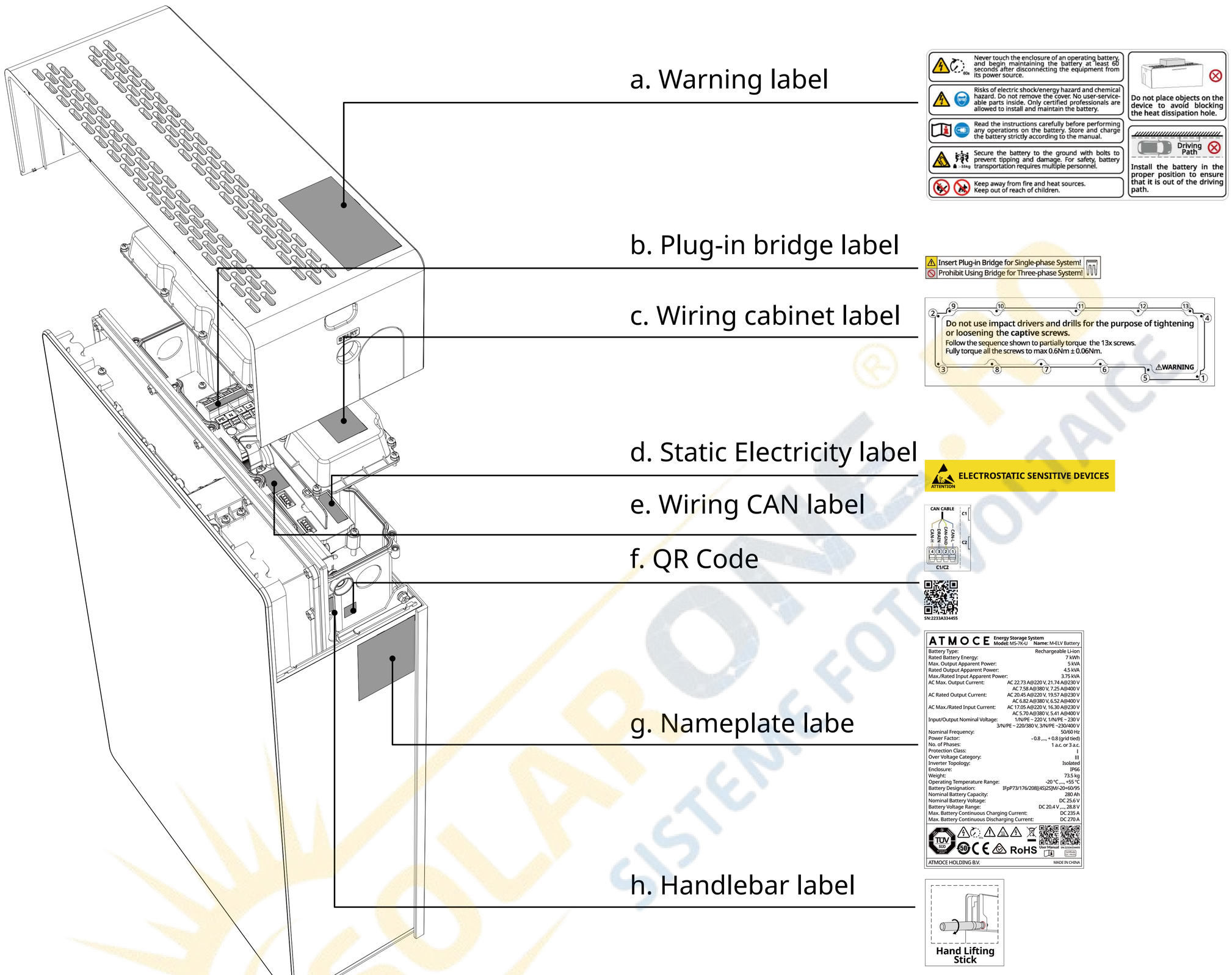

a. Warning label

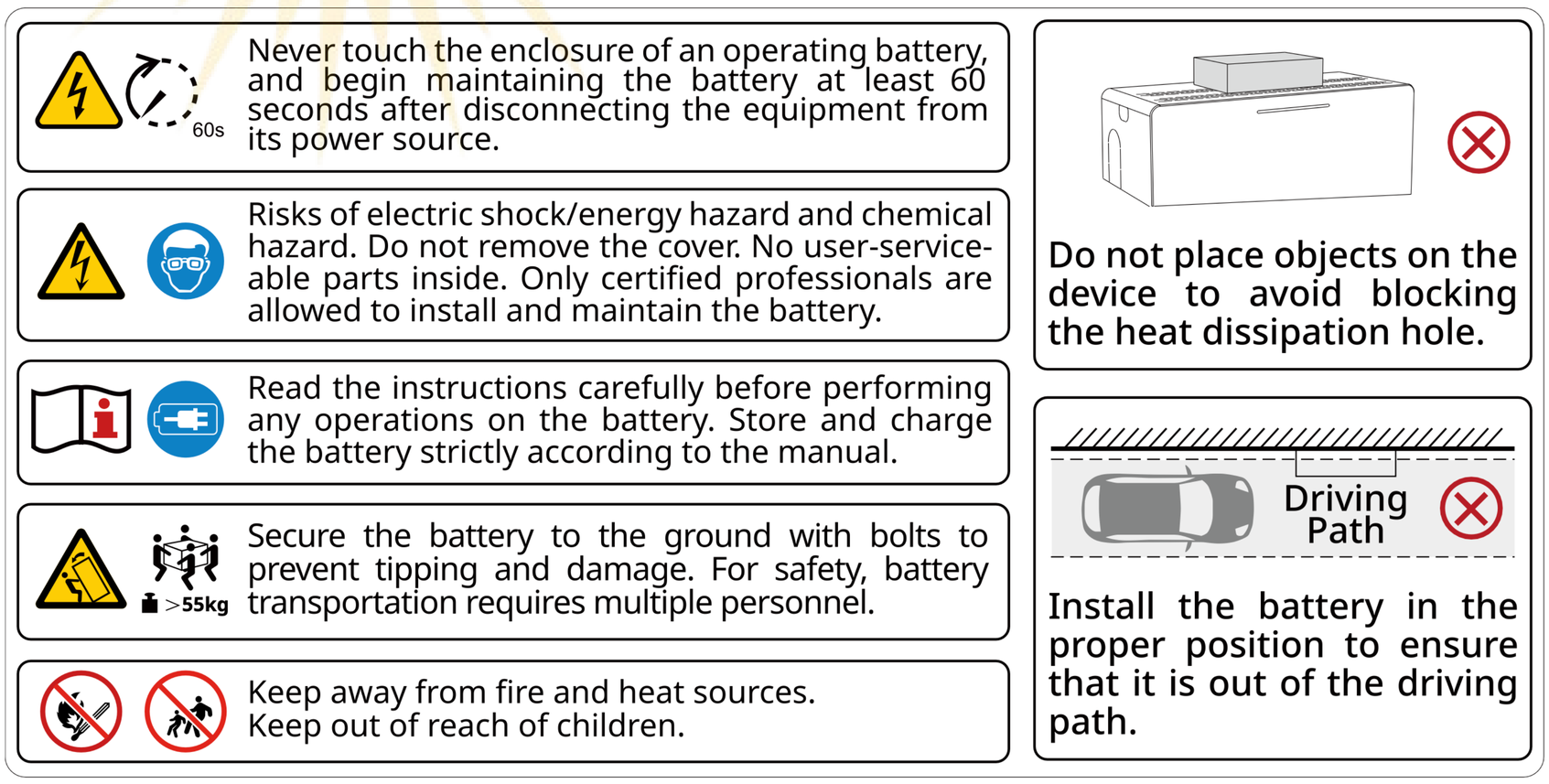

© 2025 ATMOCE Holding B.V. All rights reserved.

b. Plug-in bridge label

c. Wiring cabinet label

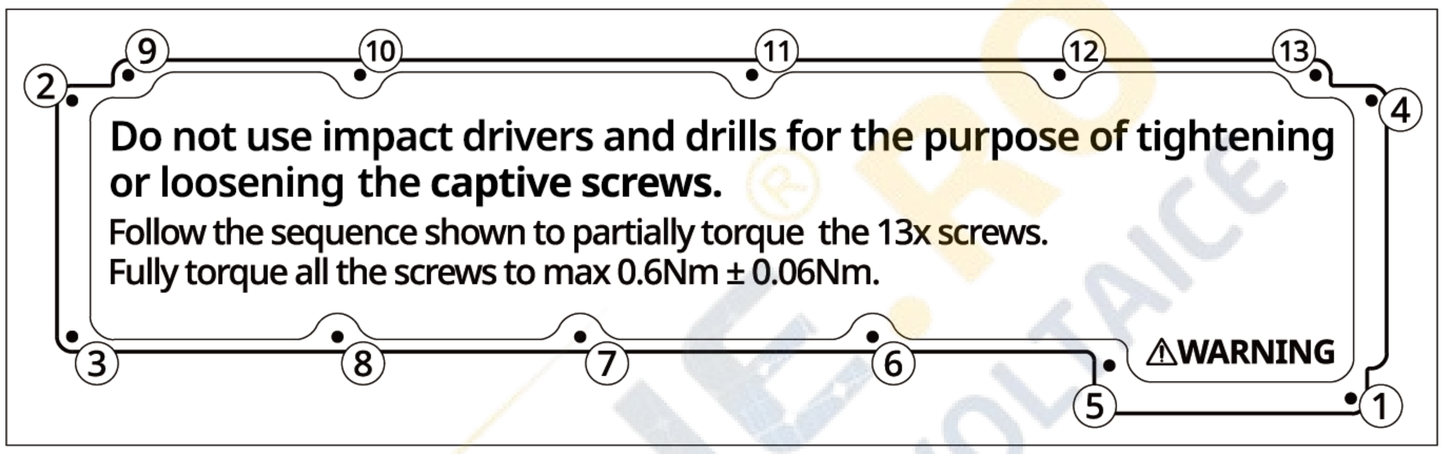

d. Static electricity label

e. Wiring CAN label

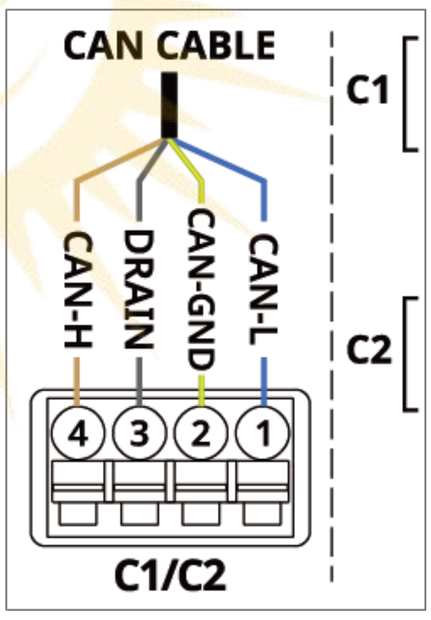

f. QR code

SN:2233A334455

© 2025 ATMOCE Holding B.V. All rights reserved.

g. Nameplate

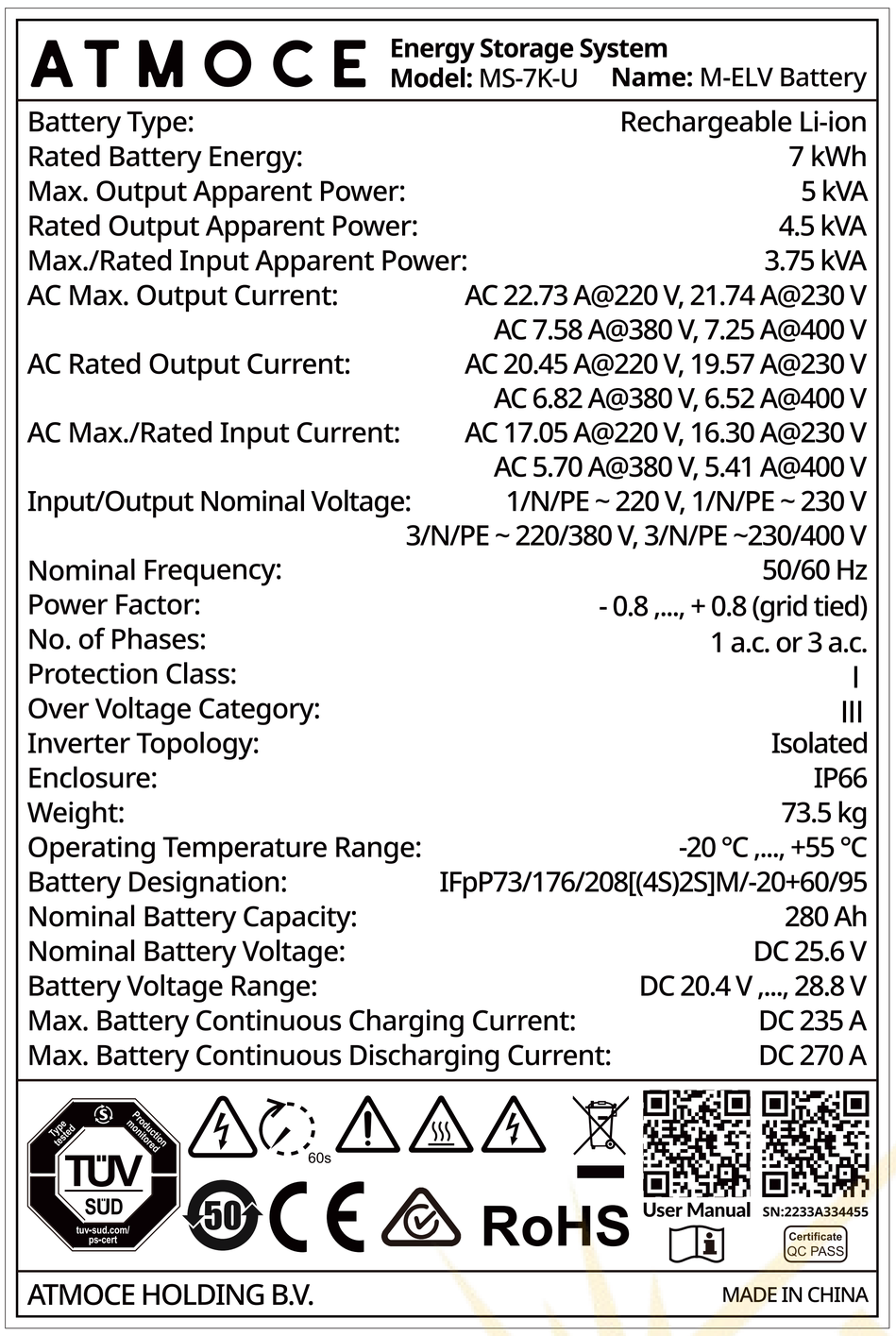

ATMOCE **Energy Storage System**
Model: MS-7K-U **Name:** M-ELV Battery

Battery Type:	Rechargeable Li-ion
Rated Battery Energy:	7 kWh
Max. Output Apparent Power:	5 kVA
Rated Output Apparent Power:	4.5 kVA
Max./Rated Input Apparent Power:	3.75 kVA
AC Max. Output Current:	AC 22.73 A@220 V, 21.74 A@230 V AC 7.58 A@380 V, 7.25 A@400 V
AC Rated Output Current:	AC 20.45 A@220 V, 19.57 A@230 V AC 6.82 A@380 V, 6.52 A@400 V
AC Max./Rated Input Current:	AC 17.05 A@220 V, 16.30 A@230 V AC 5.70 A@380 V, 5.41 A@400 V
Input/Output Nominal Voltage:	1/N/PE ~ 220 V, 1/N/PE ~ 230 V 3/N/PE ~ 220/380 V, 3/N/PE ~230/400 V
Nominal Frequency:	50/60 Hz
Power Factor:	- 0.8 ,..., + 0.8 (grid tied)
No. of Phases:	1 a.c. or 3 a.c.
Protection Class:	I
Over Voltage Category:	III
Inverter Topology:	Isolated
Enclosure:	IP66
Weight:	73.5 kg
Operating Temperature Range:	-20 °C ,..., +55 °C
Battery Designation:	IFpP73/176/208[(4S)2S]M/-20+60/95
Nominal Battery Capacity:	280 Ah
Nominal Battery Voltage:	DC 25.6 V
Battery Voltage Range:	DC 20.4 V ,..., 28.8 V
Max. Battery Continuous Charging Current:	DC 235 A
Max. Battery Continuous Discharging Current:	DC 270 A

Nameplate Label Instruction

Lable	Description
CE	The product has passed CE related certification.
	Waste electrical and electronic equipment (WEEE), which cannot be treated as household waste and should be returned to ATMOCE or disposed of in accordance with local regulations.
RoHS	Restriction of Hazardous Substances (ROHS)-compliant.
	Please read the user manual before using the equipment.
60s	Delayed discharge. Wait 60 seconds for the unit to fully discharge after it is powered off.
	Risk of burn. Do not touch the enclosure of the microinverter, as its temperature will become high during operation.
	Risk of electric shock. Switch off the power to the circuit breaker(s) you're working with.
50	Exceeding this period may pollute the environment
	Caution.

h. Hnadlebar label

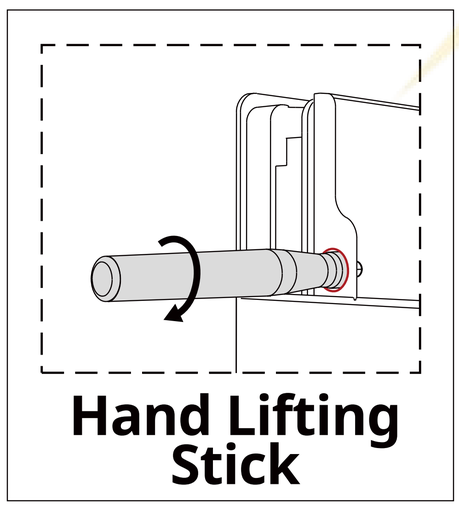

© 2025 ATMOCE Holding B.V. All rights reserved.

Storage Requirements

If the product is not to be used and installed immediately, it must be stored in accordance with the following requirements:

- Do not remove the outer packaging of the product.
- The storage temperature should be maintained within –20 ℃ to +55 ℃.
- The relative humidity should be maintained between 4% RH and 100% RH.
- Store the product in a clean and dry place, away from dust and moisture.
- Stack no more than 7 layers high. When stacking, please be careful when placing the packaging box to avoid personal injury or equipment damage caused by equipment tipping over.
- Regular inspections are required during storage (once every three months recommended). If the product has been placed in storage for two years or longer, it must be inspected and tested by qualified personnel before use.
- Regular recharging are required during storage as the table below.

Storage temperature	Storage time
-20℃<T≤25℃	15 months
25℃<T≤35℃	9 months
35℃<T≤45℃	6 months
45℃<T≤55℃	3 months

NOTE:

- **If it is within the storage time, the battery does not need to be recharged.**
- **If it has exceeded the storage time, the battery should be recharged as soon as possible.**
- **The maximum number of recharging is 3. If the maximum number of times is exceeded, it is recommended to discard the battery.**
- **The battery power must be recharged to 30% SOC.**

© 2025 ATMOCE Holding B.V. All rights reserved.

Installation

4.1 Pre-installation Requirements

4.1.1 Grid requirements

ATMOCE battery should connect to a single–phase or a three-phase grid. Measure AC line voltages at the point of connection to confirm that they are within the ranges.

Phase setup	Voltage range	
Single–phase	L to N	176 to 276 Vac
Three–phase	L1, L2, L3 to N	176 to 276 Vac

4.1.2. Cable requirements

To properly set up the system, it is necessary to select the appropriate cables. The table below shows the recommended cable requirements.

Function	Recommendation	
Power cable	4 to 10 mm^2, 3–core(L+N+PE) 2.5 to 10 mm^2, 5–core(3*L+N+PE)	Rated Voltage to Earth / Ground, U_0=450V, Rated Voltage Between L lines, U=750V, Copper core wire with a maximum allowable operating temperature of not less than 90°C
CAN COM cable	0.2 to 0.75 mm^2, 3–core	Rated Voltage to Earth / Ground U=300V, Three-core + shielded

NOTE:

- **When connecting the cables to the M-ELV Battery, you must cover the cable ends by using the proper cold–press terminal provided in the package.**
- **When stripping the cable, remove approximately 12 mm of the insulation layer from the power cable.**
- **Depending on the quantity and installation method of the batteries, the recommended wire diameter for the power cables can be found in the Appendix 1.**

© 2025 ATMOCE Holding B.V. All rights reserved.

4.1.3 Prepare the Tools and Materials

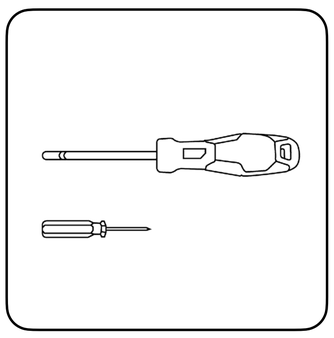
Screwdriver

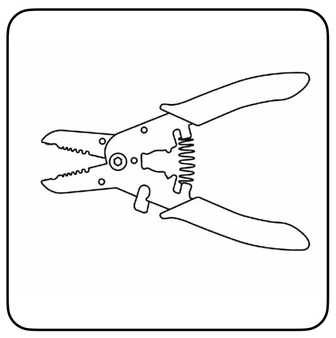
Wire stripper

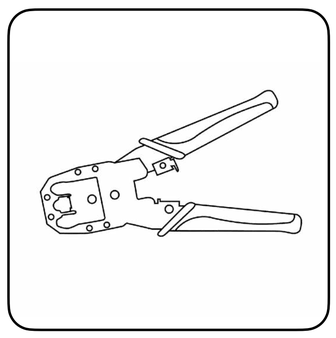
Power line crimper

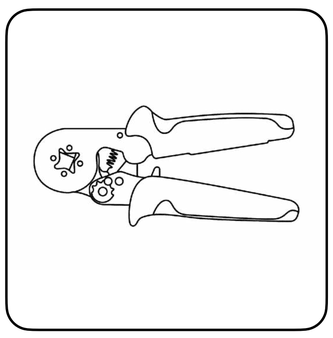
Communication line crimper

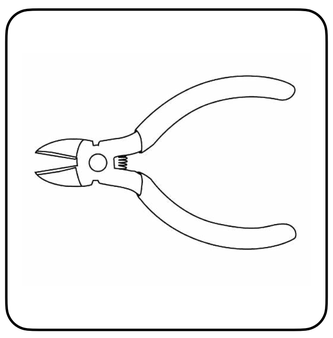
Diagonal cutter

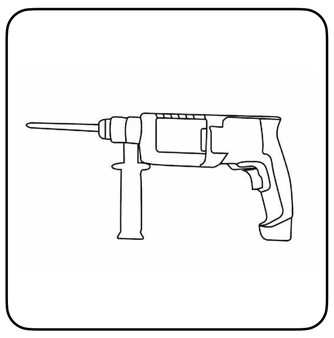
Drill

Hammer

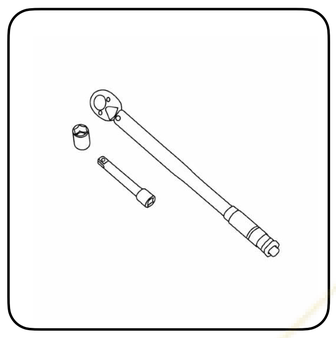
Torque wrench

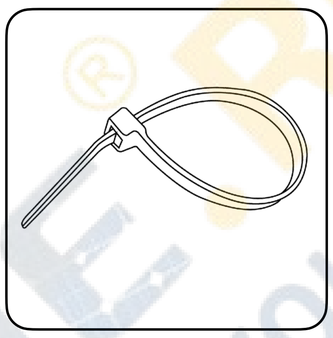
Tie wrap

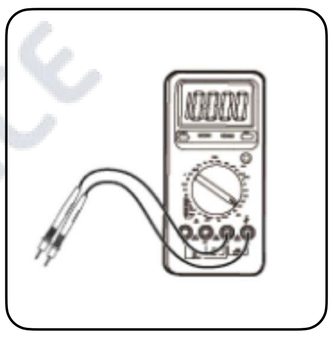
Multimeter

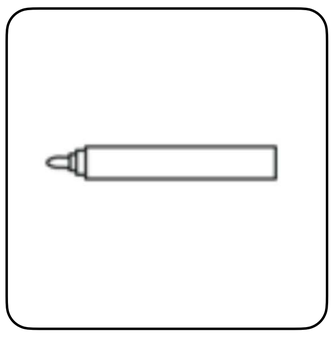
Marking pen

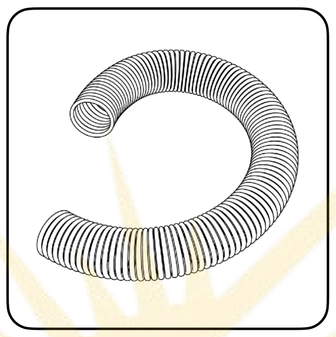
Corrugated protective pipe

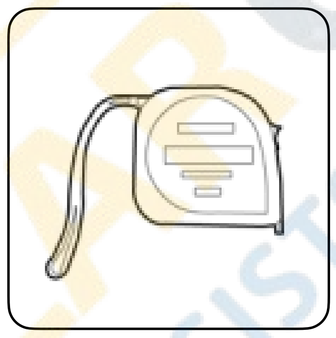
Tape measure

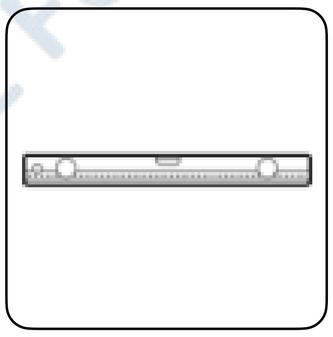
Spirit level

4.1.4 Prepare the Safety Equipment

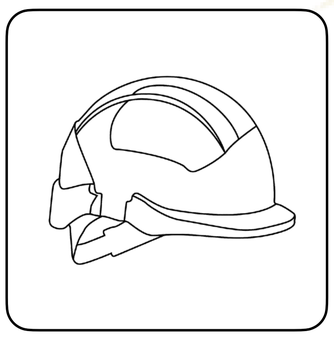
Safety helmet

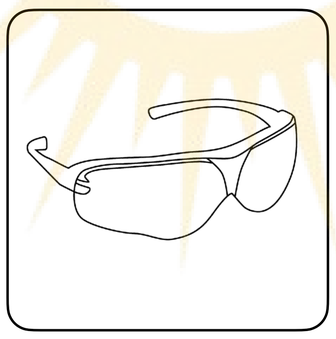
Protective goggles

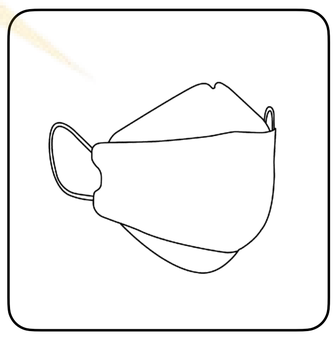
Mask

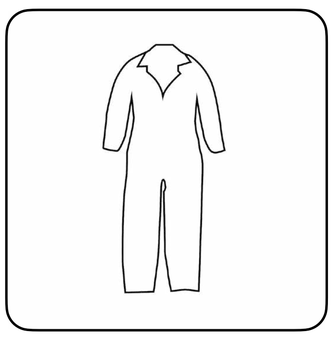
Safety clothing

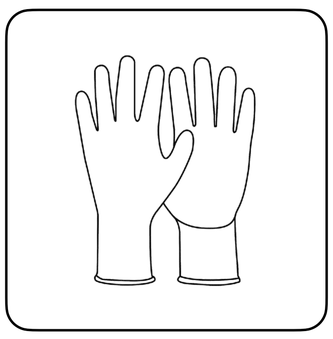
Safety gloves

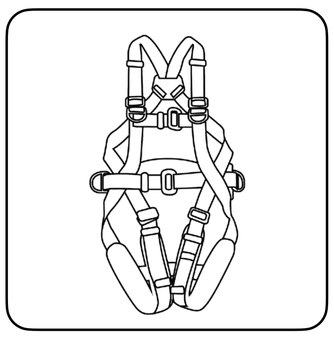
Safety belt

Safety shoes

© 2025 ATMOCE Holding B.V. All rights reserved.

4.1.5 Download the Atmozen App

Download the latest version of the Atmozen app. Open and log in to your account. You can track the progress of system installation with this app.

4.1.6. Recommended installation environment and space

a. The installation environment should be:

Install indoors

Install outdoors

Install under 3000m

Install from -20 to 55

b. The installation environment should not be:

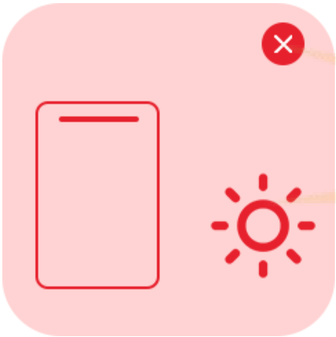

Sunlight directly

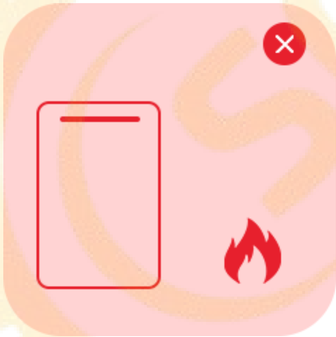

Flame

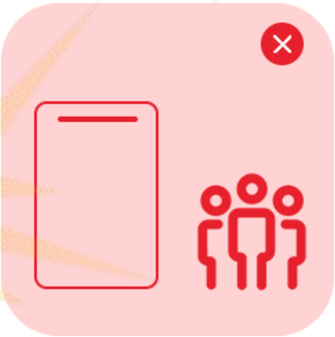

Crowded areas

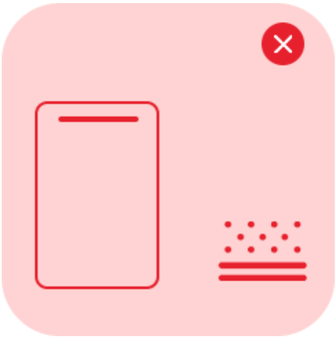

Dust

Immersion > 50cm

c. The installation space should meet the following conditions.

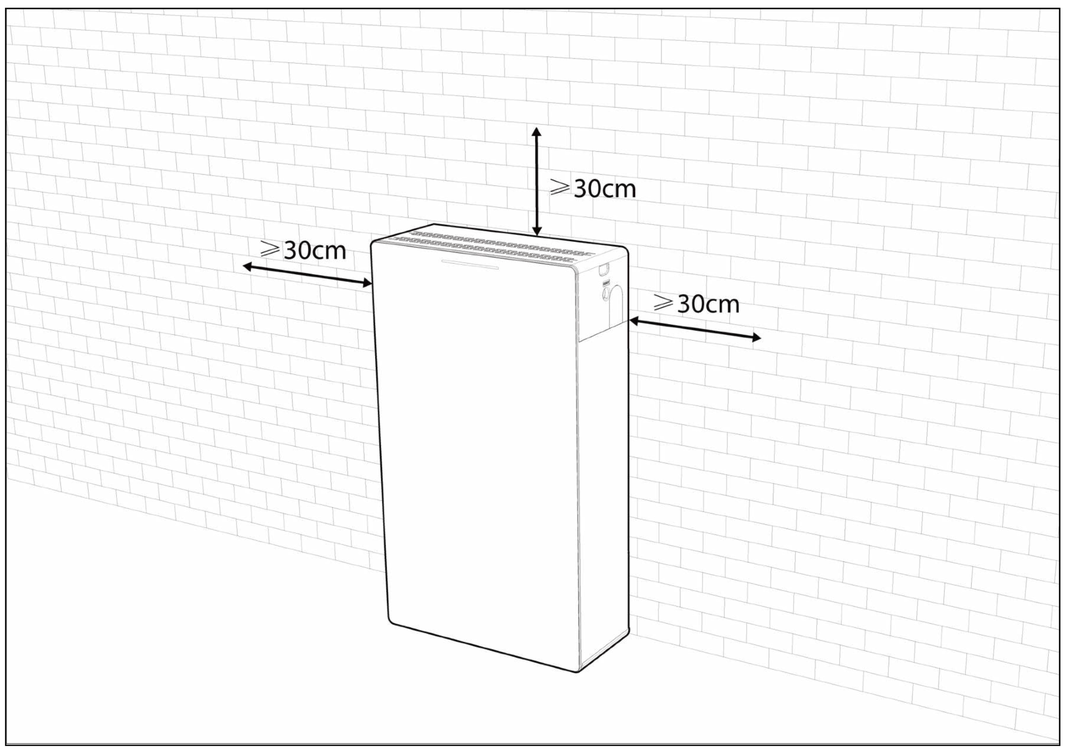

© 2025 ATMOCE Holding B.V. All rights reserved.

4.2 Take out the M-ELV Battery

a. Check the accessories in the box, it contains the following items.

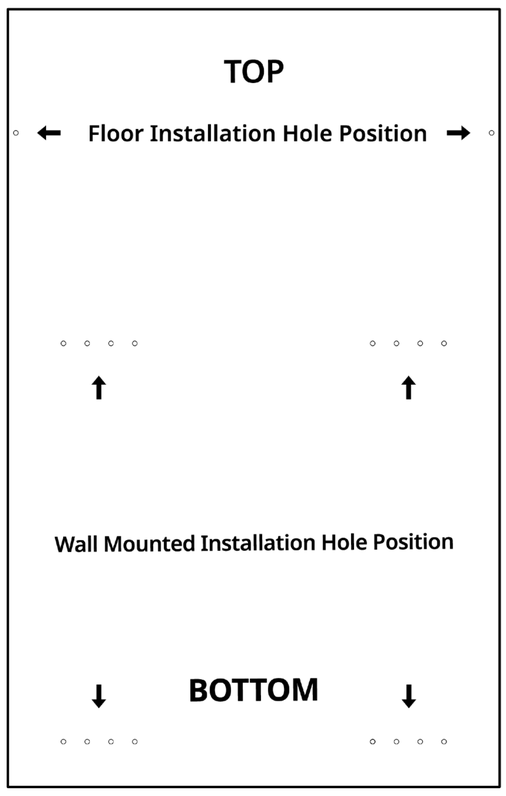

Marking plate

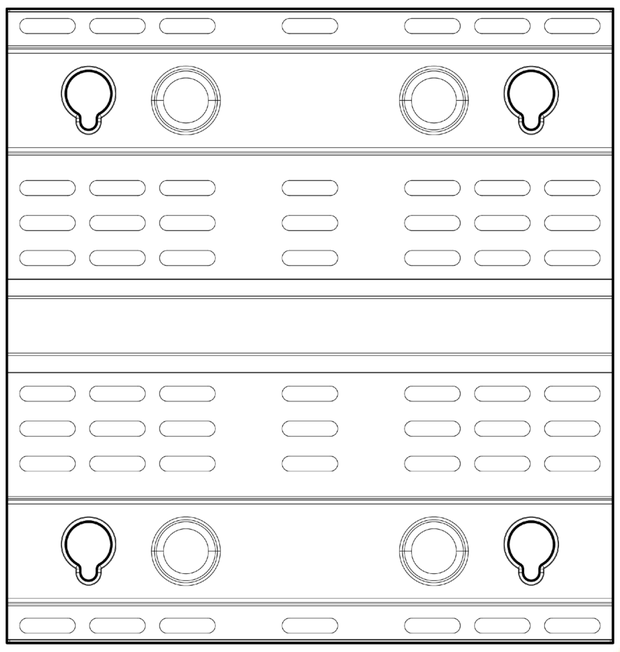

Mounting plate

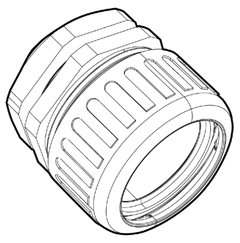

Waterproof gland

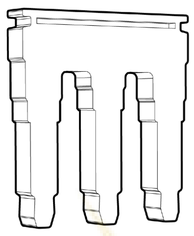

Plug-in bridge

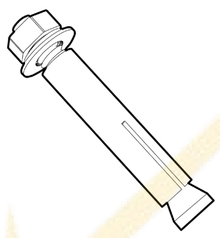

Expansion screw

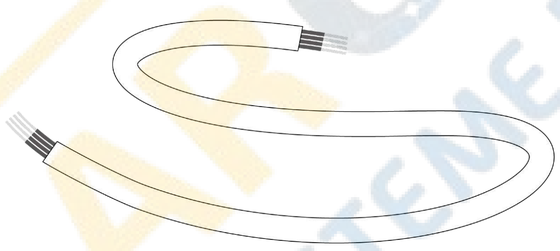

3m CAN COM cable

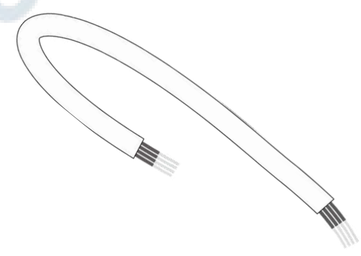

1.5m CAN COM cable

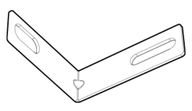

Mounting lug

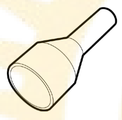

Cold–press terminal

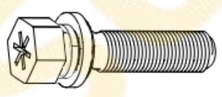

Screw

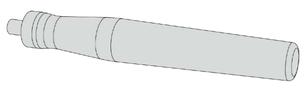

Handlebar

b. After unboxing, remove the upper cover of the M-ELV Battery .

c. Take out the handlebars and insert them into the holes on the both sides of the battery.

d. Remove the battery out of the box.

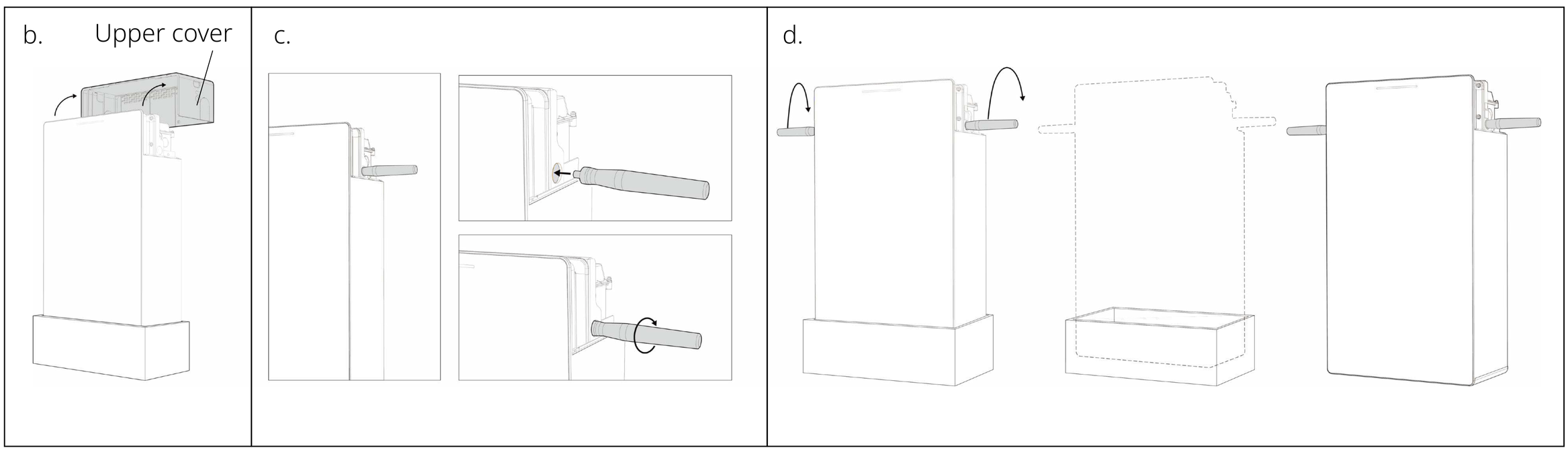

© 2025 ATMOCE Holding B.V. All rights reserved.

4.3 Mount the M-ELV Battery

For floor installation, the floor must be level, otherwise wall mounting is recommended.

4.3.1 Mount on the floor

a. Take out the marking plate and place it on the wall. Use the spirit level to check that the plate is level, then make the marks.

b. Drill at the two marks to a depth of 50 mm with a hole diameter of Φ12 by using an electric drill with a bit.

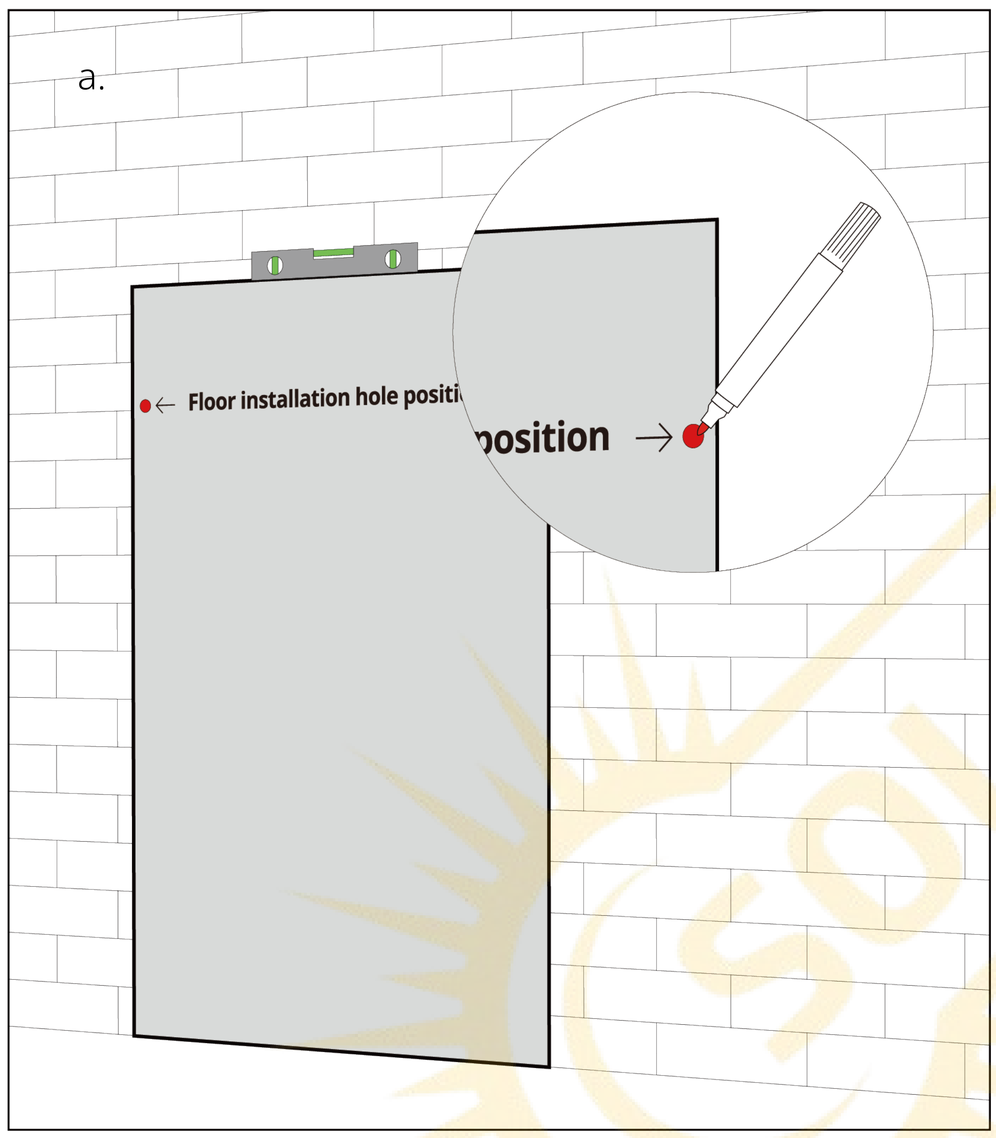

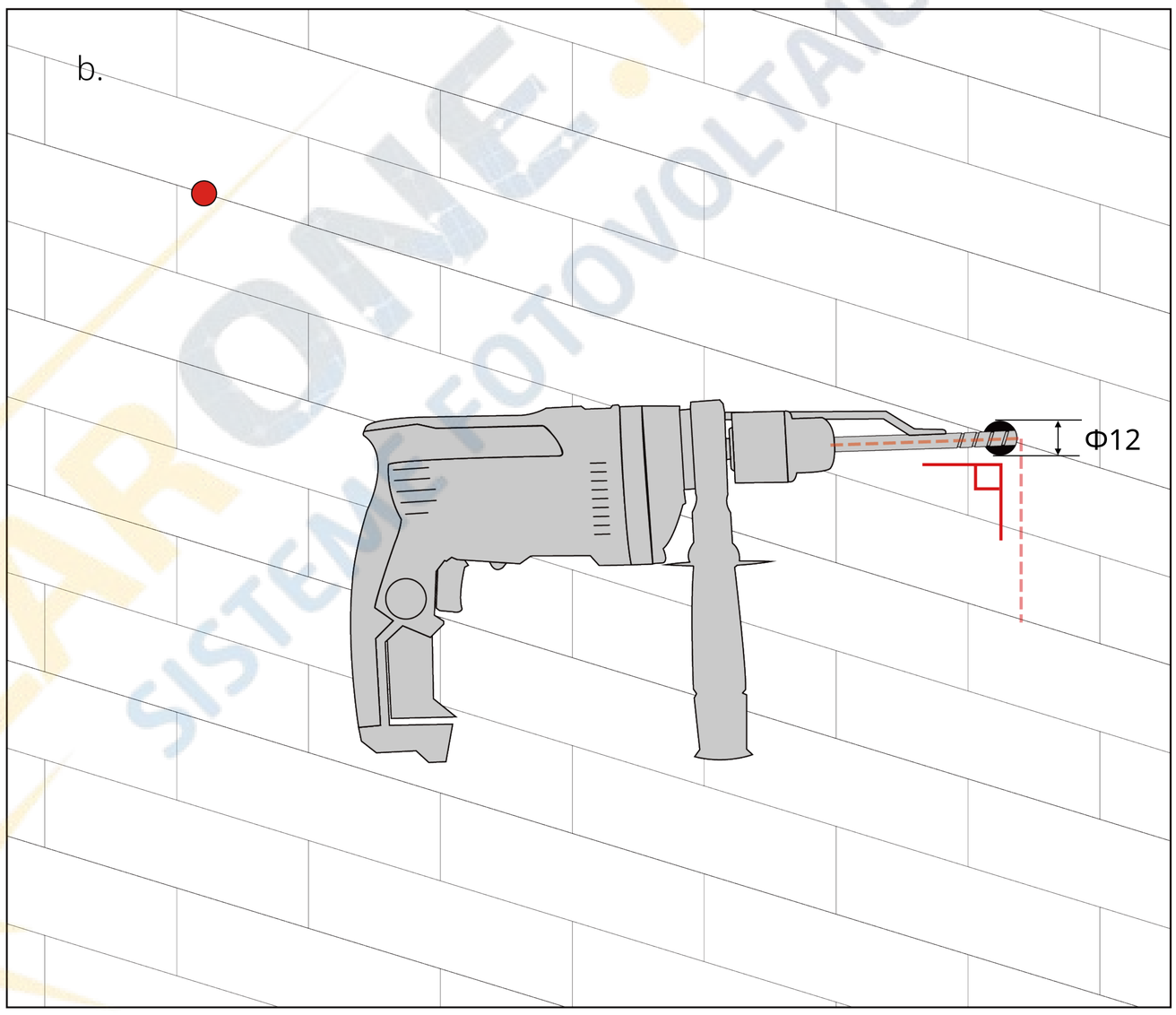

c. Take out the expansion screws and align them with the holes. Knock them into the wall with a hammer and tighten the screws with a torque of 9–14 N·m, then loosen the screws.

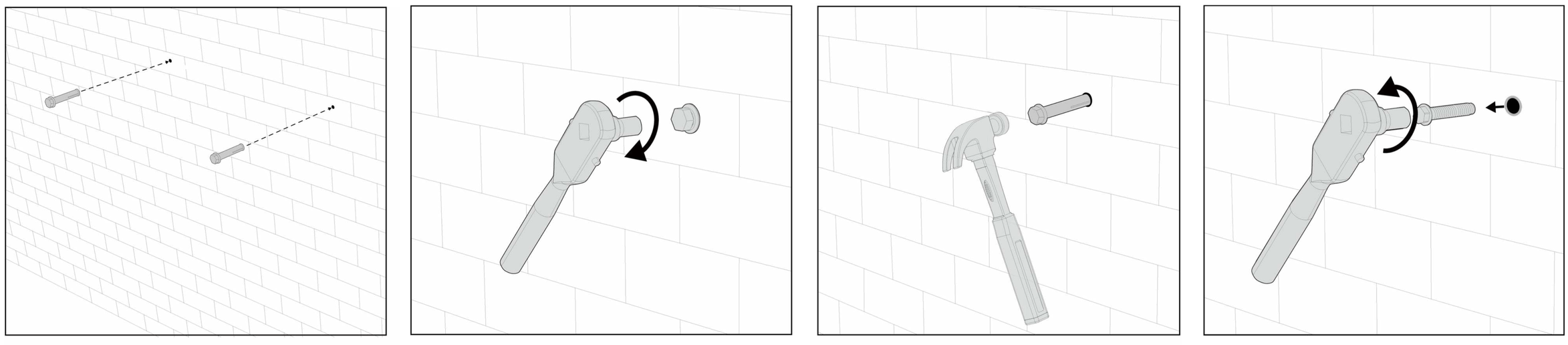

© 2025 ATMOCE Holding B.V. All rights reserved.

d. Place the battery close to the wall, ensuring it is parallel to the wall and perpendicular to the floor.

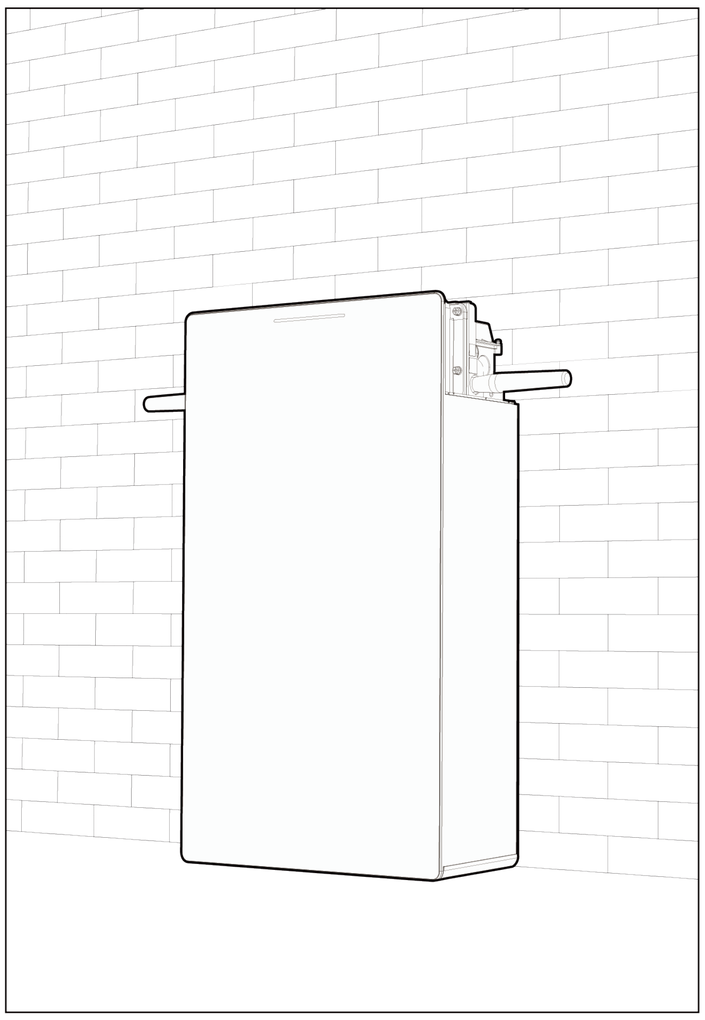
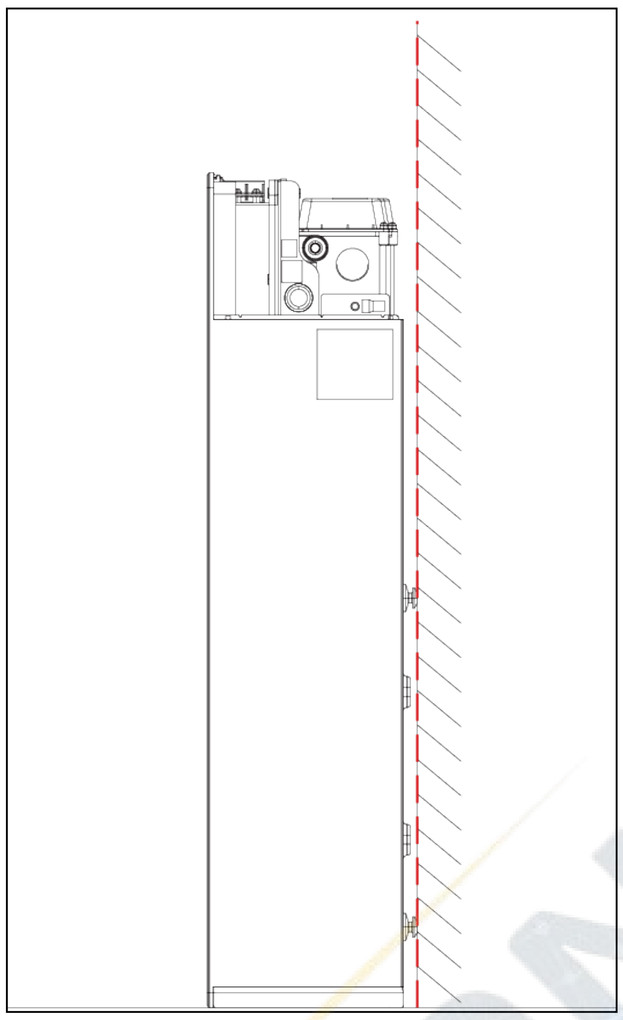
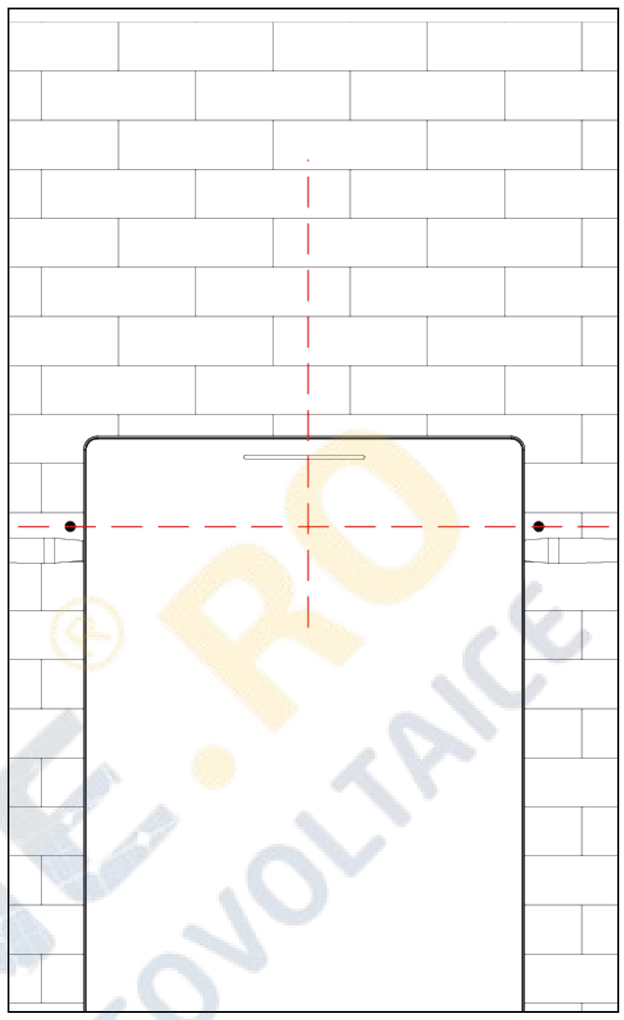

e. Remove the handlebars and take out the mounting lugs and align them with the holes on the both sides. Insert the M6 screws and tighten the screws with a torque of 3 N·m.

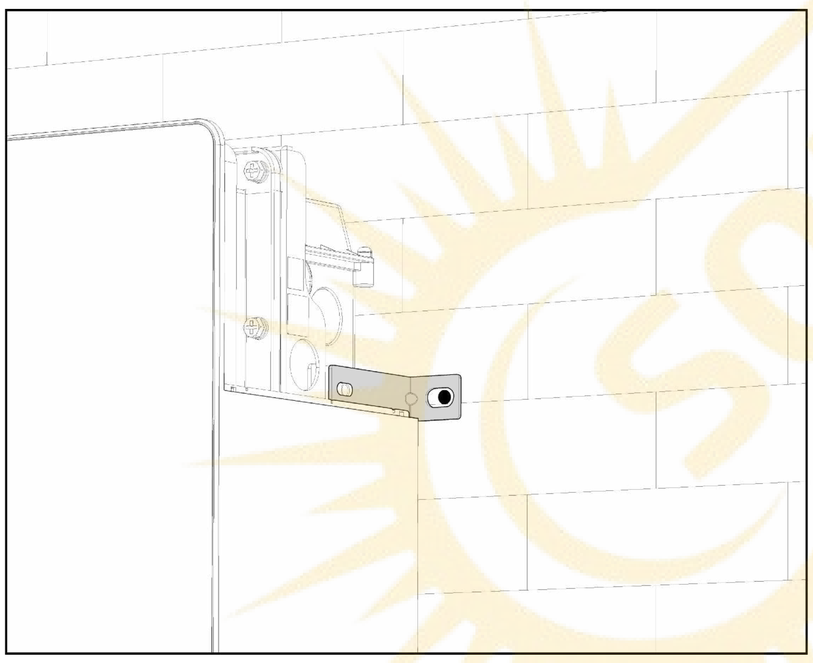
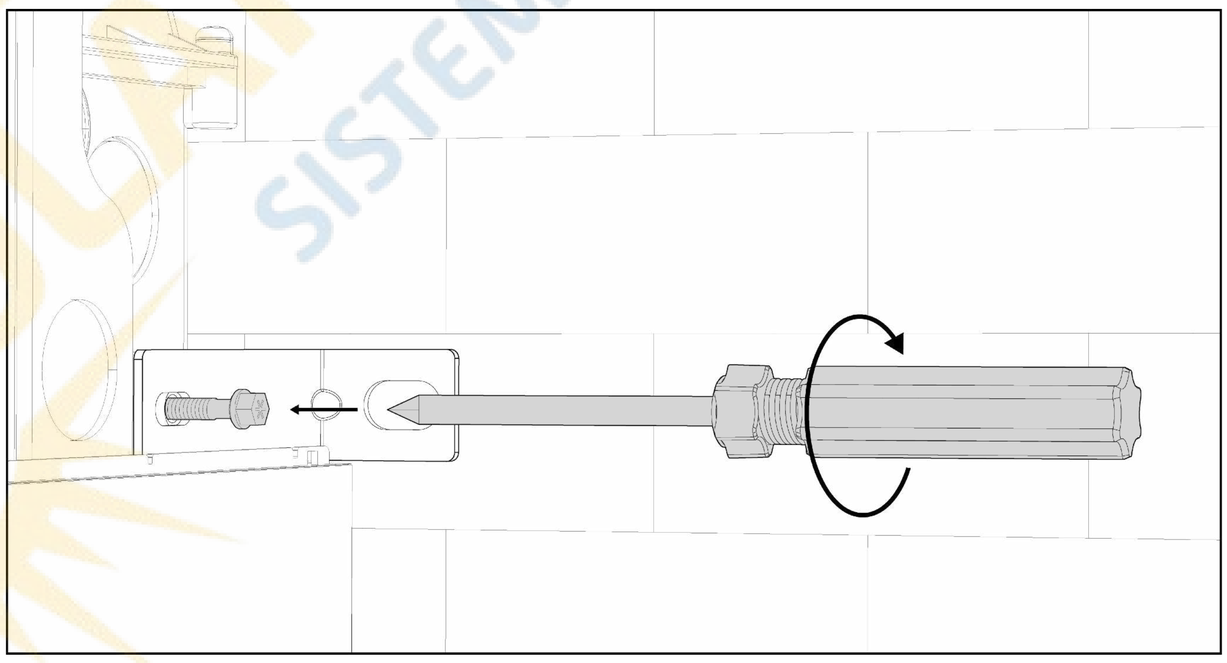

f. Insert the M10 expansion screws and tighten the screws with a torque of 9–14 N·m.

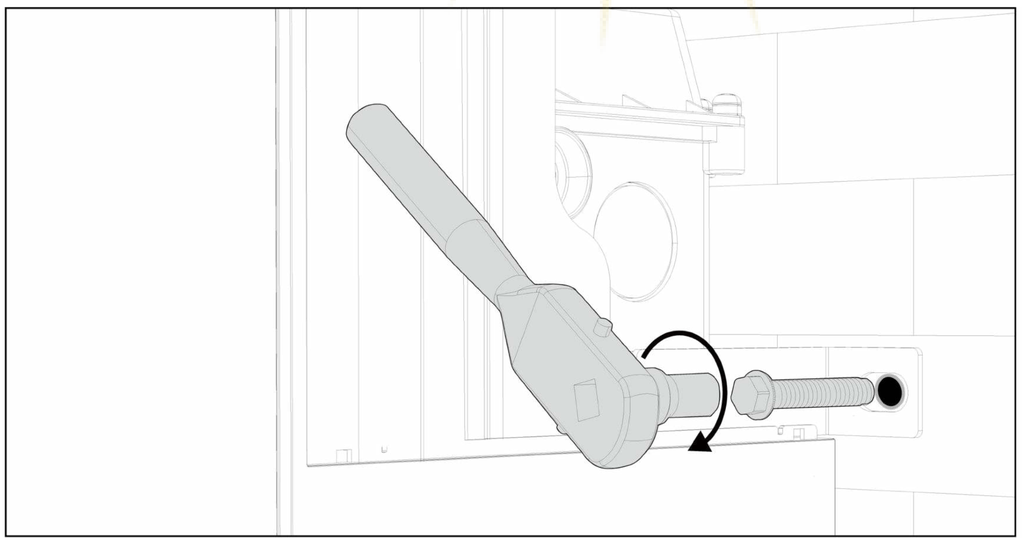
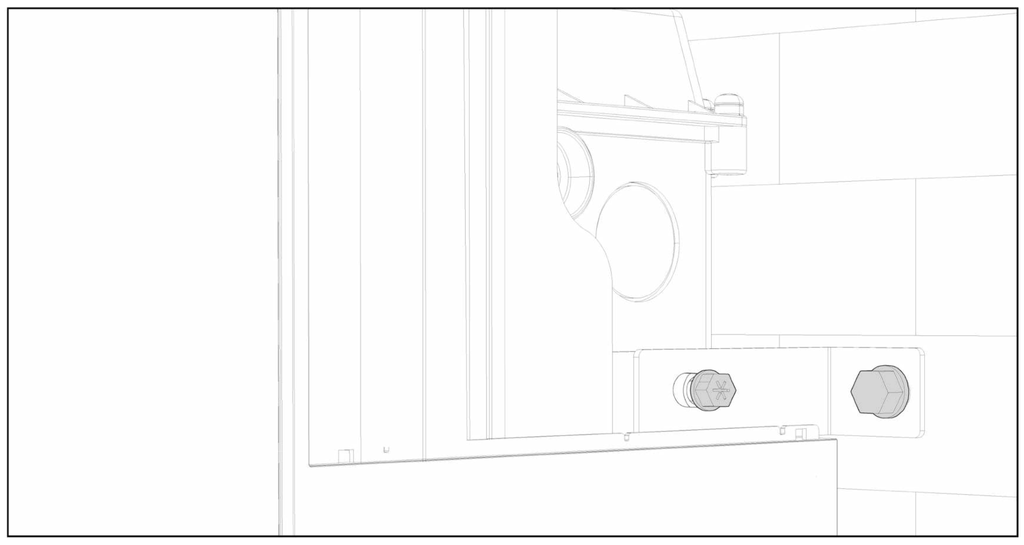

NOTE:

- **Please do not tighten the screws completely until confirming that the mounting lugs can be fully installed.**

© 2025 ATMOCE Holding B.V. All rights reserved.

4.3.2 Mount on the wall

a. Take out the marking plate and place it on the wall. Use the spirit level to check that the plate is level, then make the marks.

b. Drill at the two marks to a depth of 50 mm with a hole diameter of Φ12 by using an electric drill with a bit.

NOTE:

- The total weight for M-ELV Battery , including the battery unit, and mounting plate, is 75 kg. The wall shall bear the battery weight.

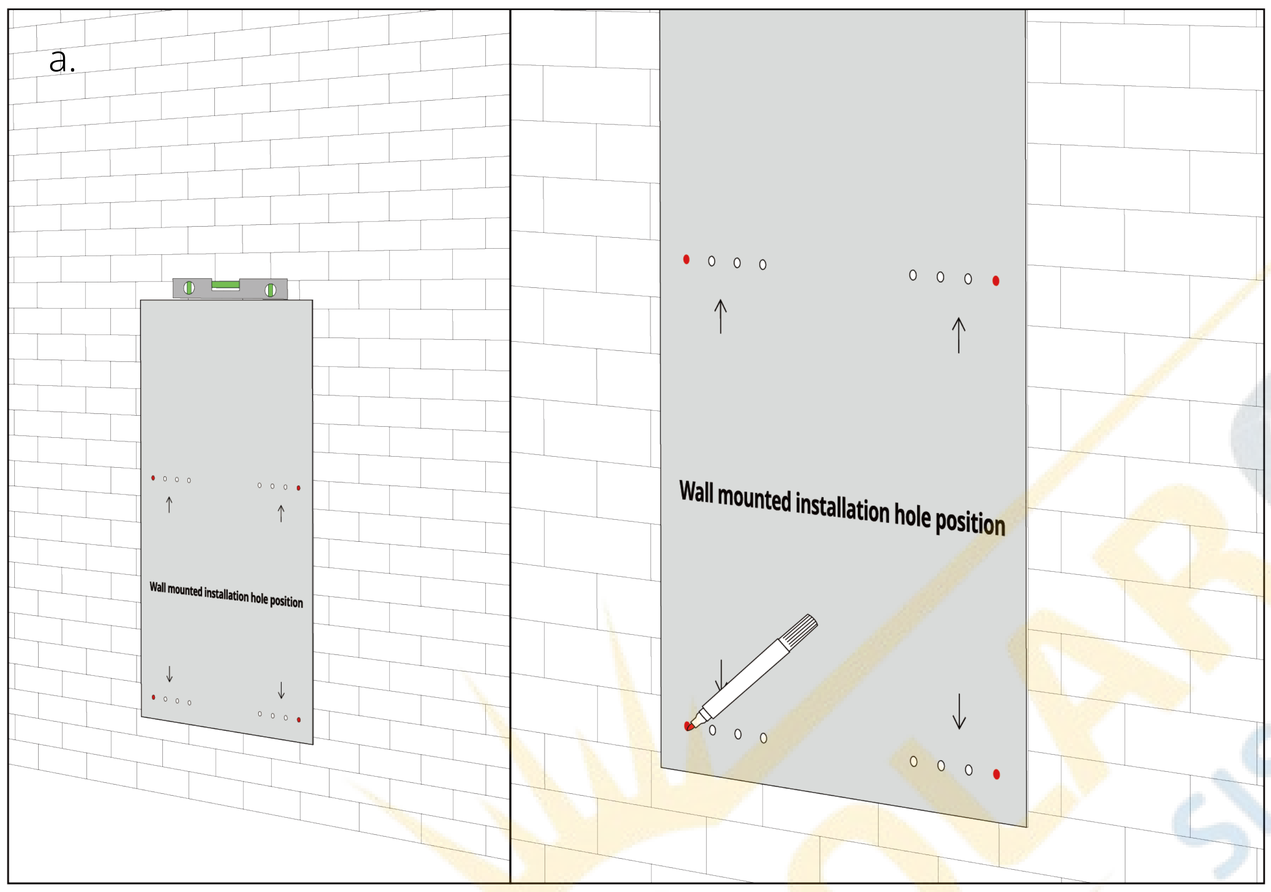

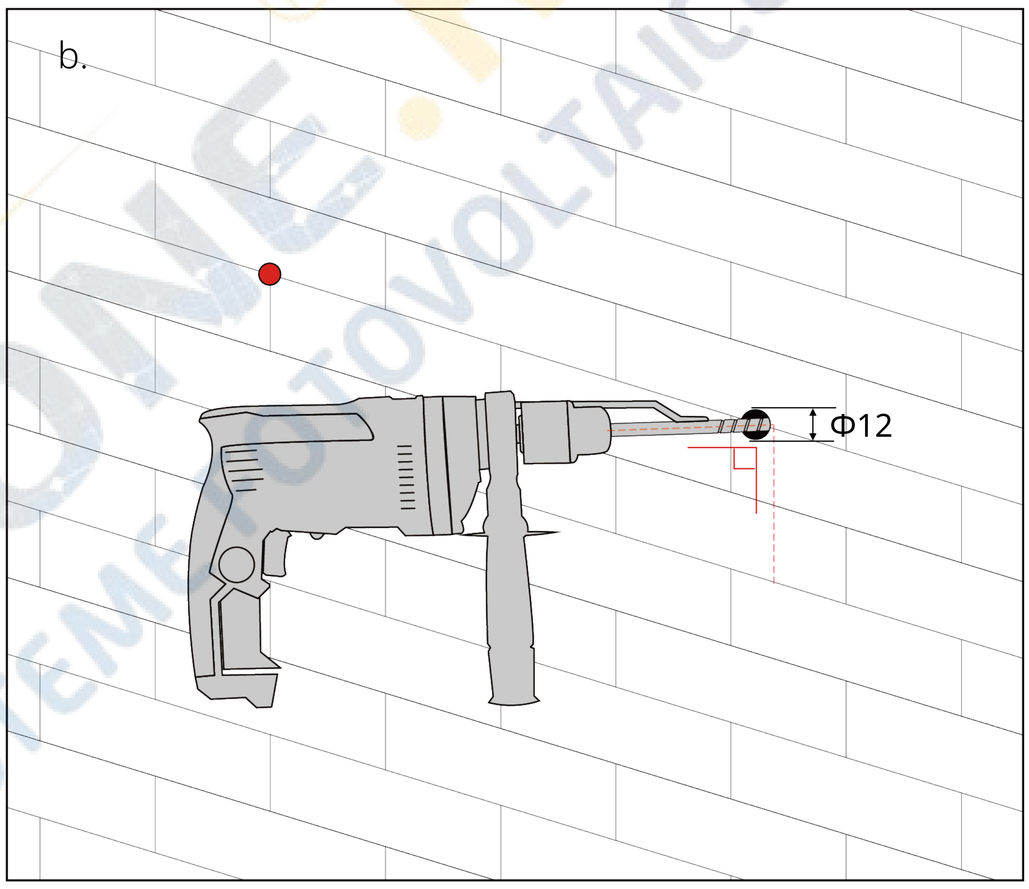

c. Take out the expansion screws and align them with the holes. Knock them into the wall with a hammer and tighten the screws with a torque of 9–14 N·m, then loosen the screws.

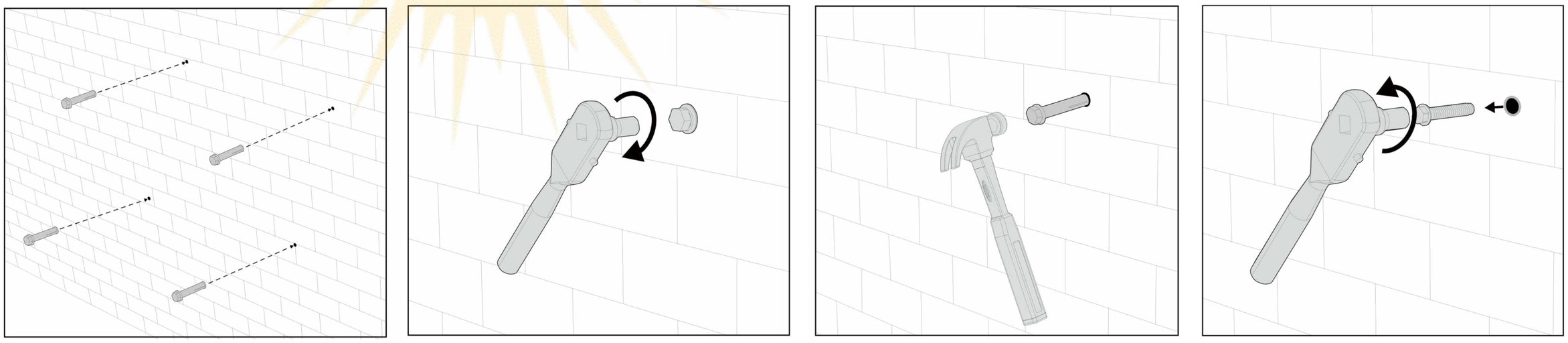

© 2025 ATMOCE Holding B.V. All rights reserved.

d. Take out the mounting plate and align it with the holes. Insert and tighten the screws with a torque of 9–14 N·m.

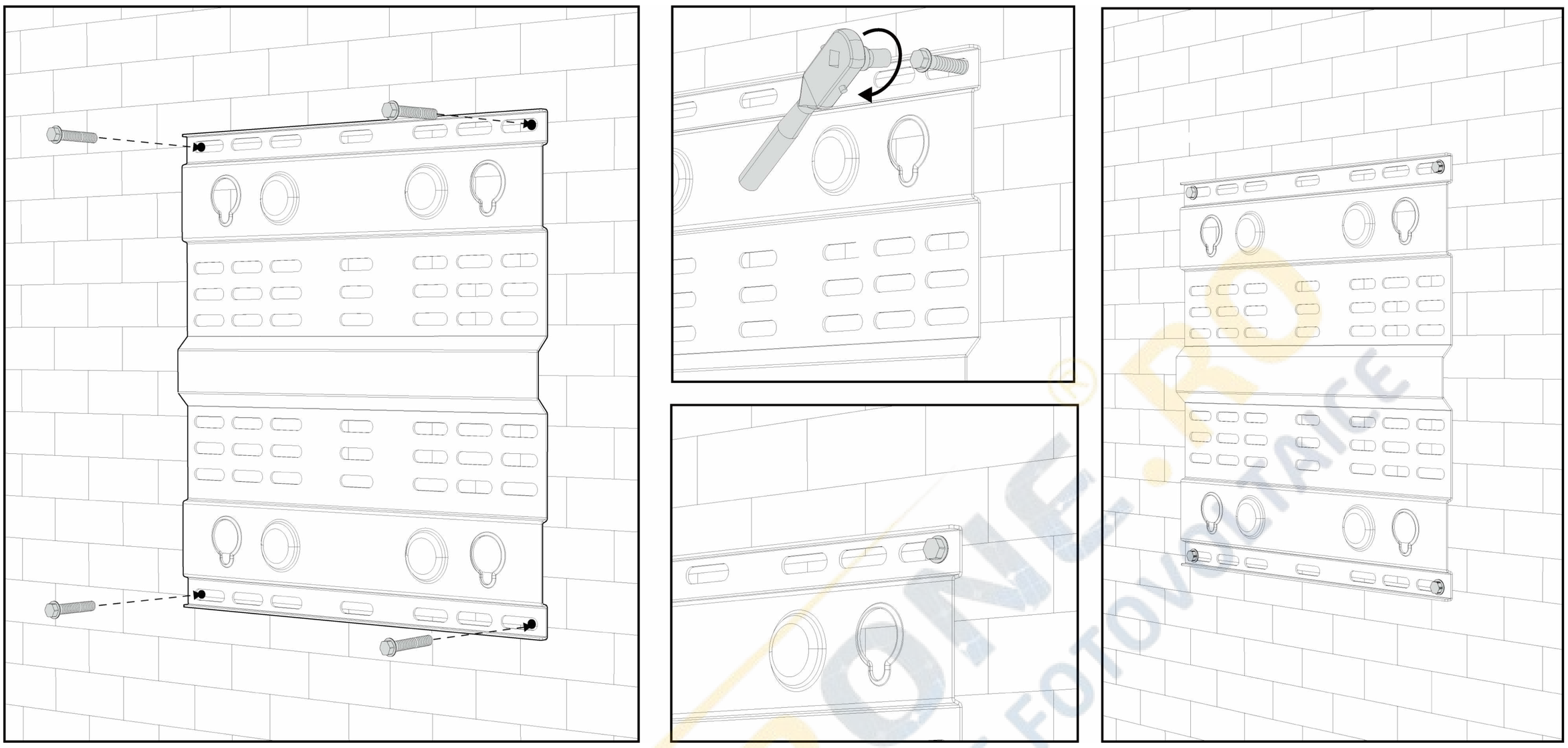

e. Insert the four mounting columns on the back of the battery into the slide rail and slide them to the end, and then remove the handlebars.

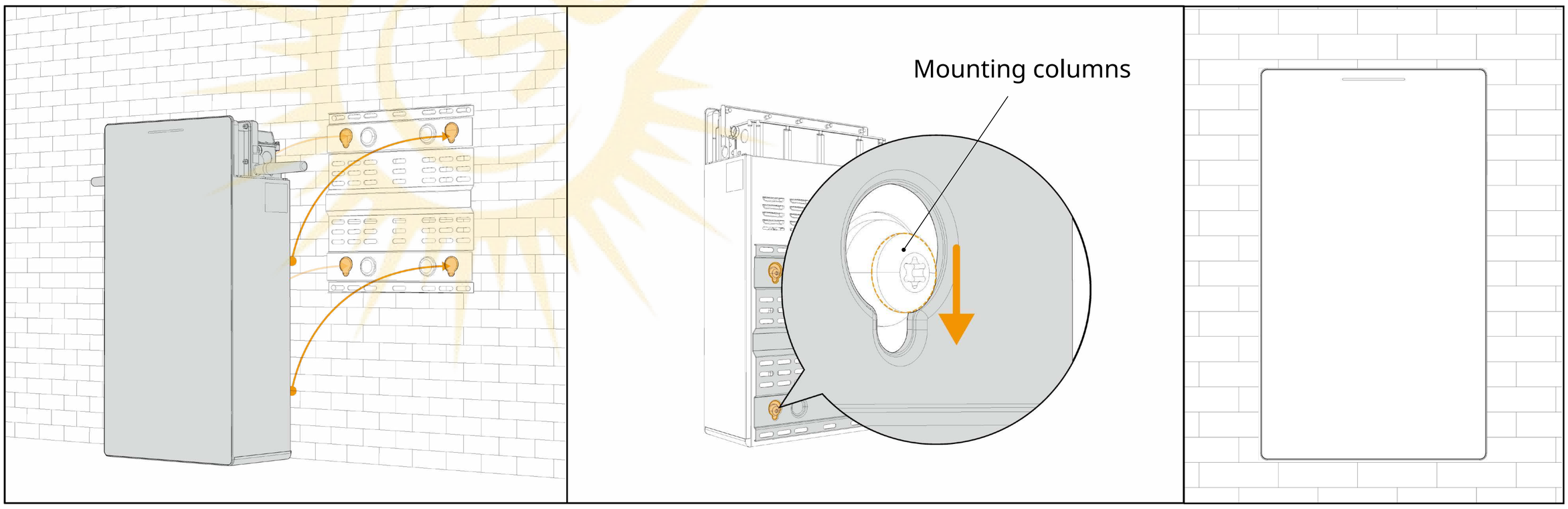

© 2025 ATMOCE Holding B.V. All rights reserved.

4.4 Remove the cover of the wiring cabinet

a. Loosen the 13 screws and remove the cover of the wiring cabinet.

NOTE:

- **Do not use the impact drivers and drills to tighten or loosen the screws.**
- **These screws are captive screws, do not attempt to unscrew them completely.**

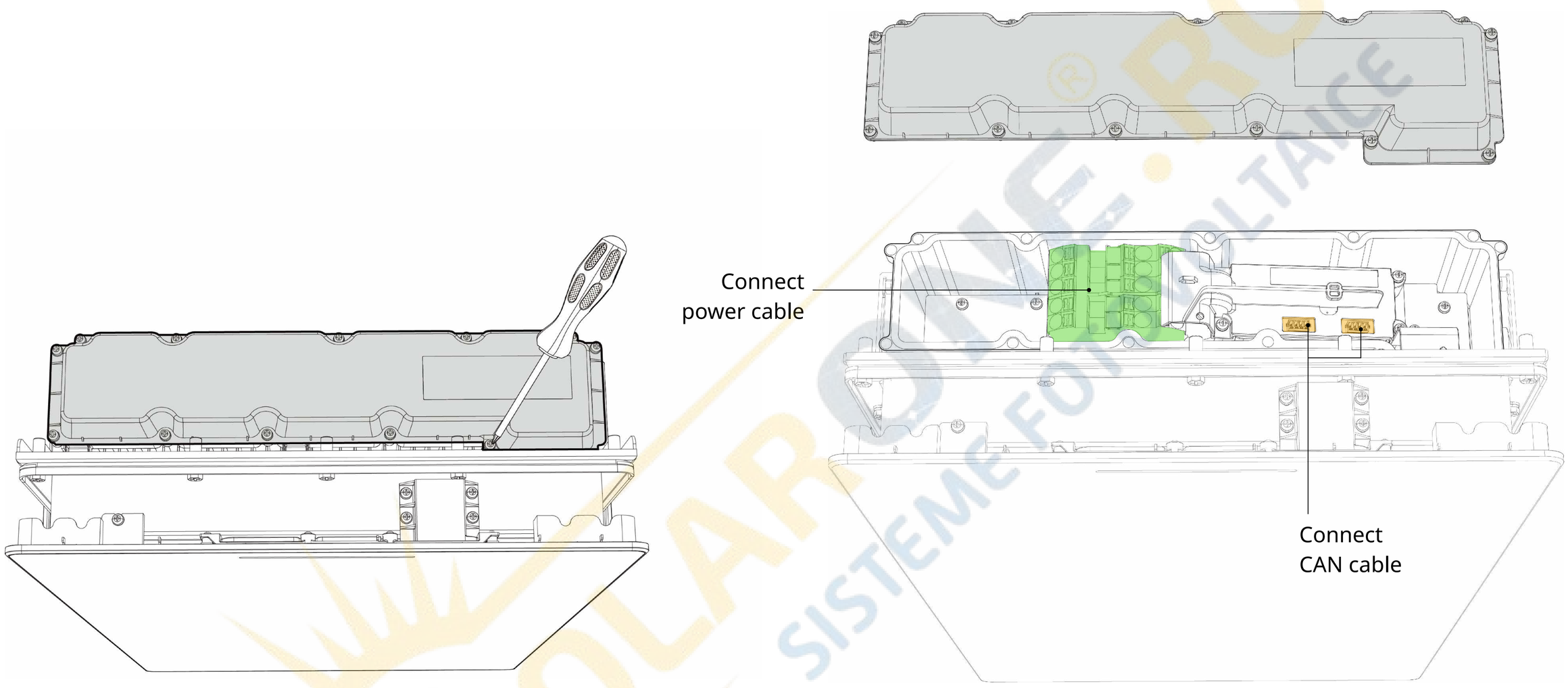

b. The details of the terminal are shown as below.

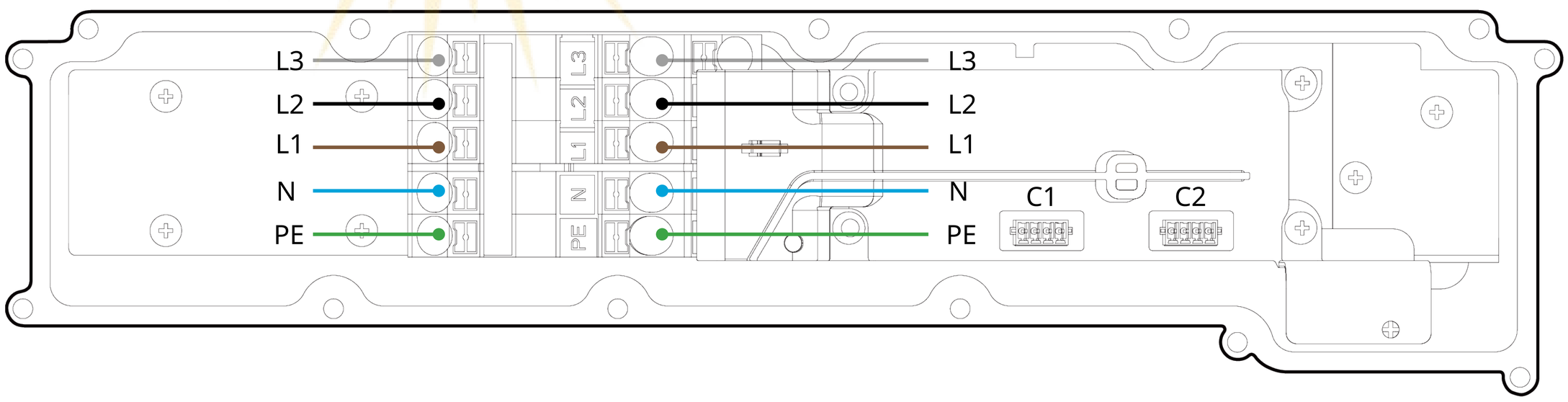

© 2025 ATMOCE Holding B.V. All rights reserved.

4.5 Remove the knockout

a. Use the handlebar to remove the knockout and mount the waterproof fittings on the holes. If there are multiple batteries, please remove the knockouts according to actual needs.
b. Remove the plug as needed and thread the cable through the appropriate plug. The relationship between the plug and the wire diameter is shown in the table below.

Item	Recommended diameter	Wire type
Plug 1-1	3×10 to 5×10 mm^2	Power cable
Plug 1-2	0.25 to 0.75 mm^2	Communication cable
Plug 1+2	5×6 mm^2	Power cable
Plug 1+2+3	5×2.5 to 5×4 mm^2	Power cable
Plug 1+2+3+4	3×2.5 to 3×4 mm^2	Power cable

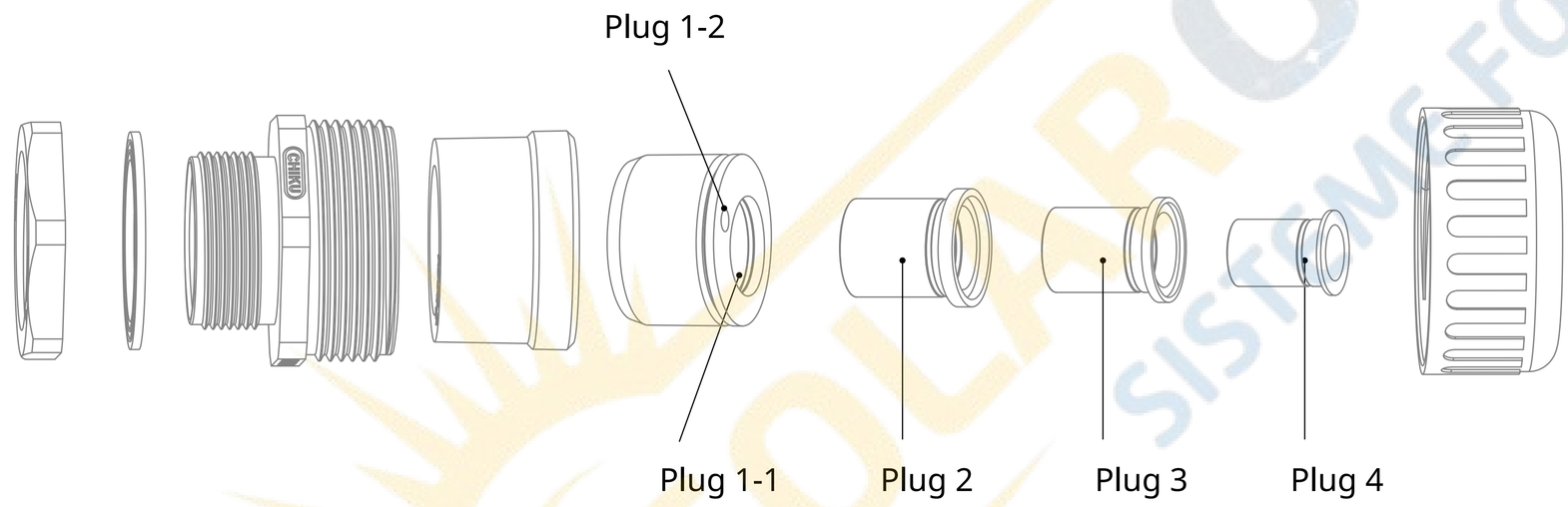

c. Tighten the lock nuts of the glands with a torque of 4–5 N·m and the sealing nuts with a torque of 7–7.5 N·m.

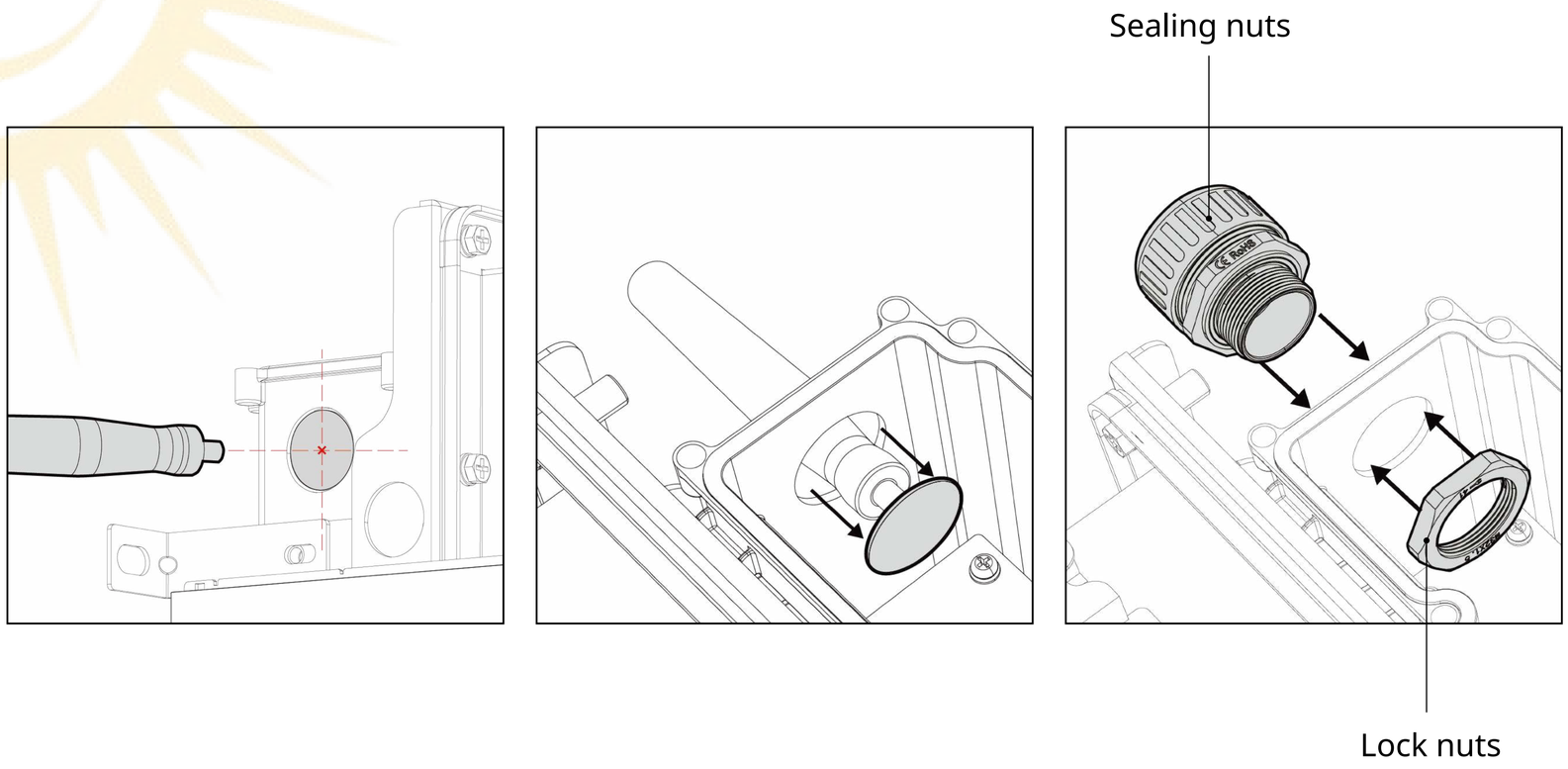

NOTE:

- **The handlebar should be aligned with the center of the knockout.**
- **Smooth the edge of the hole with a knife before tighten the nuts and wire the cables.**

© 2025 ATMOCE Holding B.V. All rights reserved.

4.6 Wire the cables

NOTE:

- The cables must connect to the battery breaker and terminals in the combiner. The wiring is different for each model of the combiner. Please check the label inside the combiner for more information.
- Improperly connected L and N will damage the equipment.

4.6.1 Single battery scenario

Section A. Wire the CAN cable

a. Connect the 3m CAN communication cable to the communication terminal as the label in the combiner.
b. Bring in the CAN cables from the combiner through the hole of the battery.
c. Remove the resistor on the C1 terminal, and connect the CAN communication cable to the proper terminal as the label.
d. Please do not perform any operations on the C2 terminal and resistor.
e. Arrange the cables and check the wiring is correct.

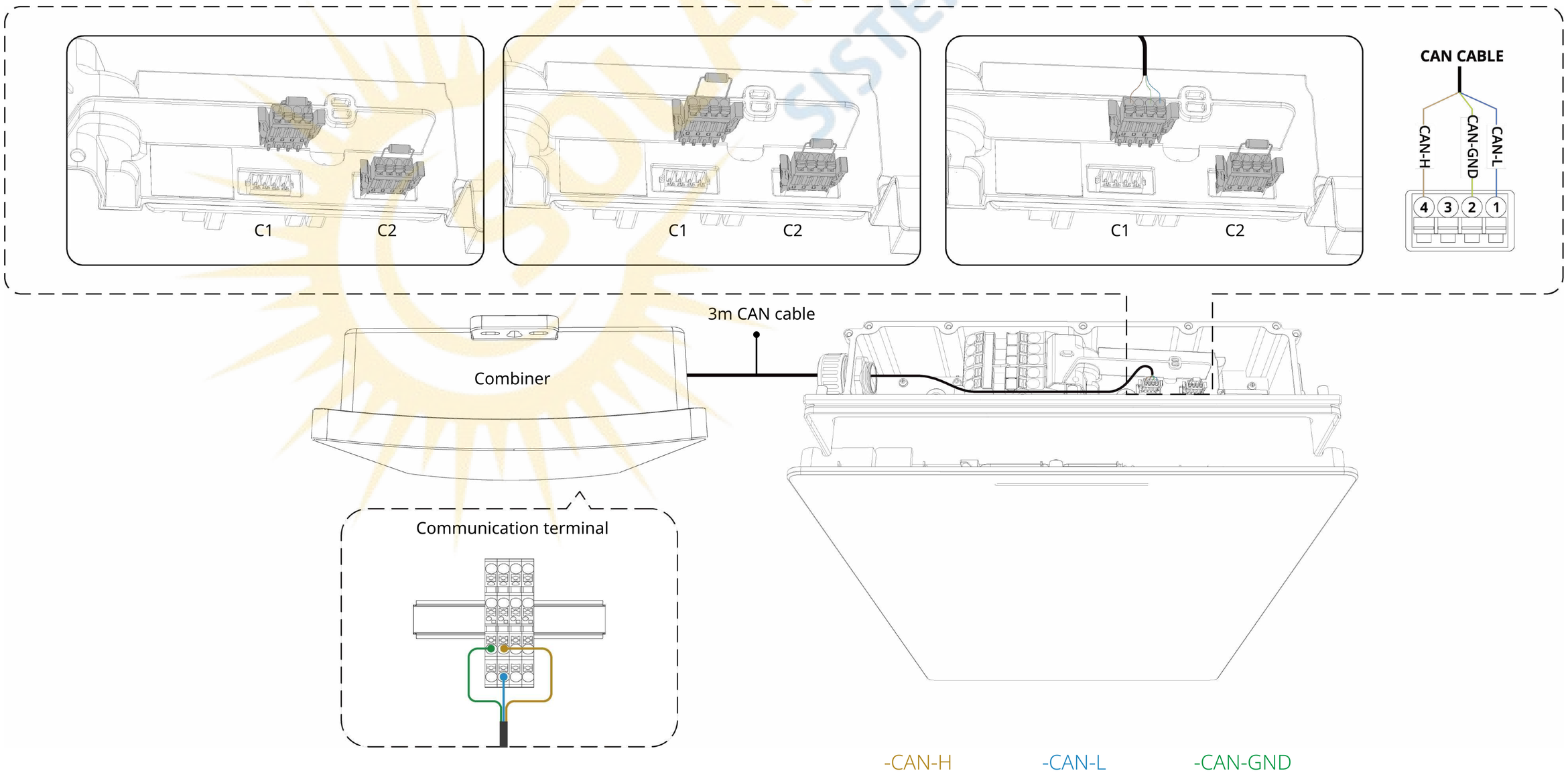

© 2025 ATMOCE Holding B.V. All rights reserved.

Section B. Wire the power cable

NOTE:

- **The cables must connect to the battery breaker and PE terminal in the combiner. Please check the label inside the combiner for more information. Incorrect connection of L and N will damage the equipment.**
- **When stripping the cable, remove approximately 120 mm of the insulation layer from the power cable and cover the cable ends by using the proper cold–pressed terminal.**
- **The length of the PE wire should be approximately 20 mm longer than the other wires.**

a. Connect the cables to the battery breaker and PE terminal block in the combiner.

b. Bring in the power cables from the combiner through the hole of the battery.

c. Connect the cables to the power and PE terminal block in the battery.

Single-phase application

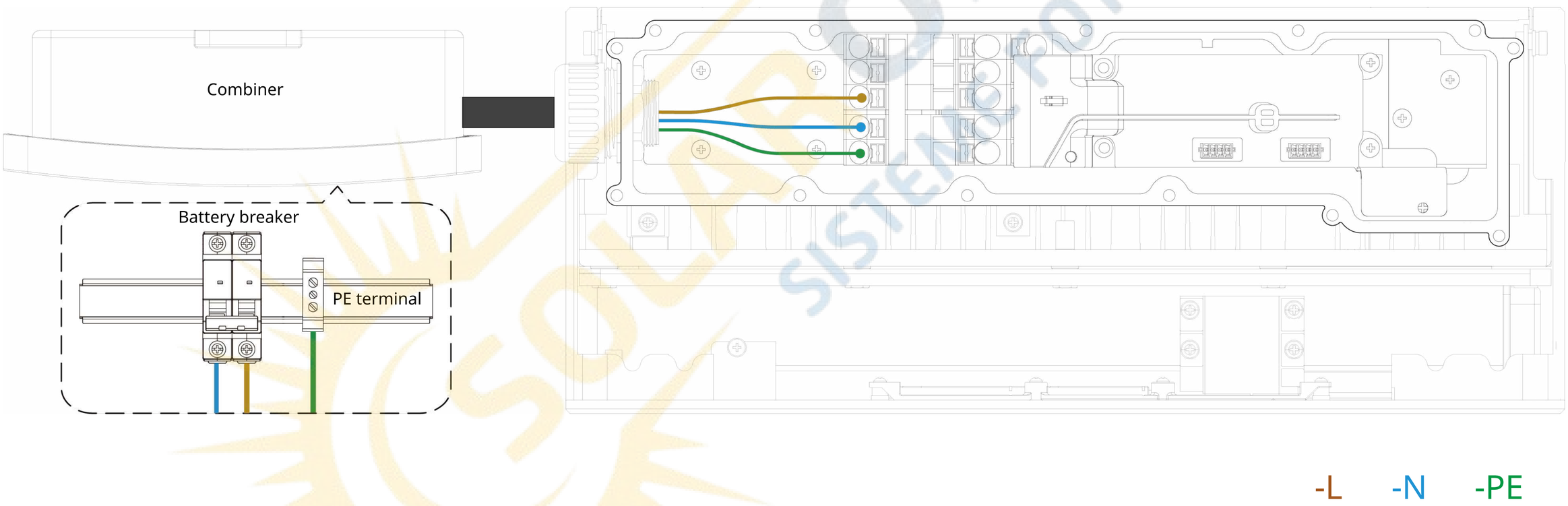

NOTE:

- **For single-phase systems, the plug-in bridge must be fully inserted as shown.**
- **After the installation, confirm that the plug-in bridge is not loose.**

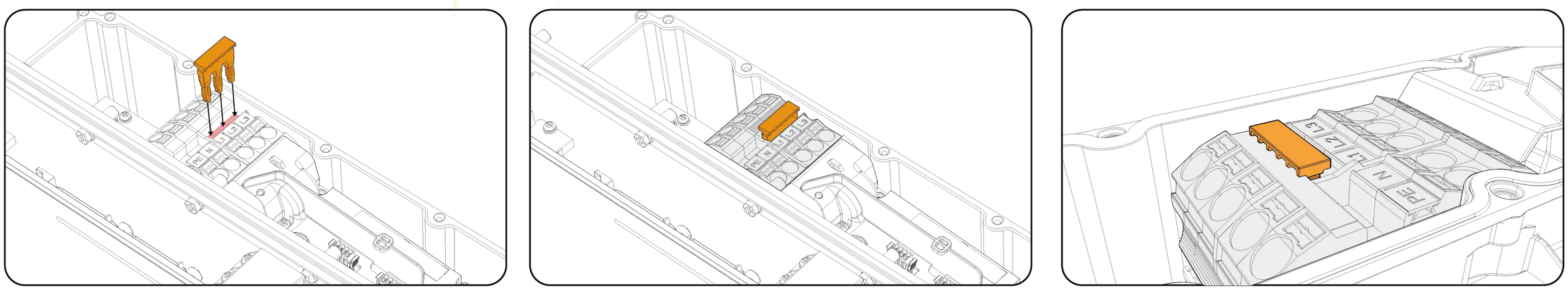

© 2025 ATMOCE Holding B.V. All rights reserved.

Three-phase application

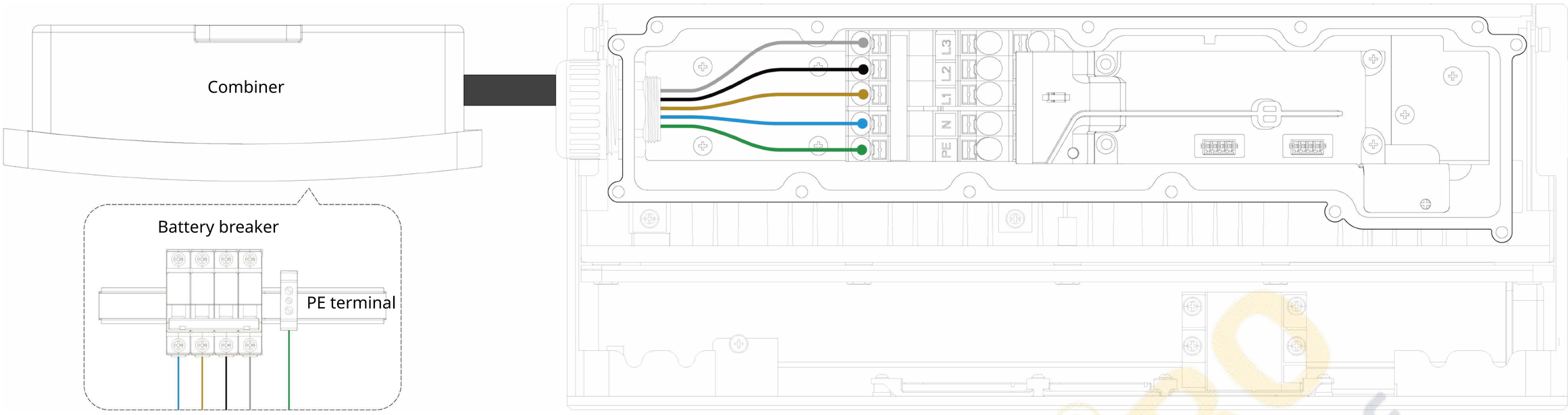

NOTE:

-L1 -L2 -L3 -N -PE

- **For three-phase system, the plug-in bridge is strictly prohibited.**

4.6.2 Multiple batteries scenario

Section A. Wire the CAN cable

a. Connect the 3m CAN communication cable to the communication terminal as the label in the combiner.

b. Bring in the 3m and 1.5 m CAN communication cable through the hole of the battery.

c. For the battery 1, remove the resistor on the C1 and C2 terminal, and then connect the cable to the C1 and C2 terminal as below.

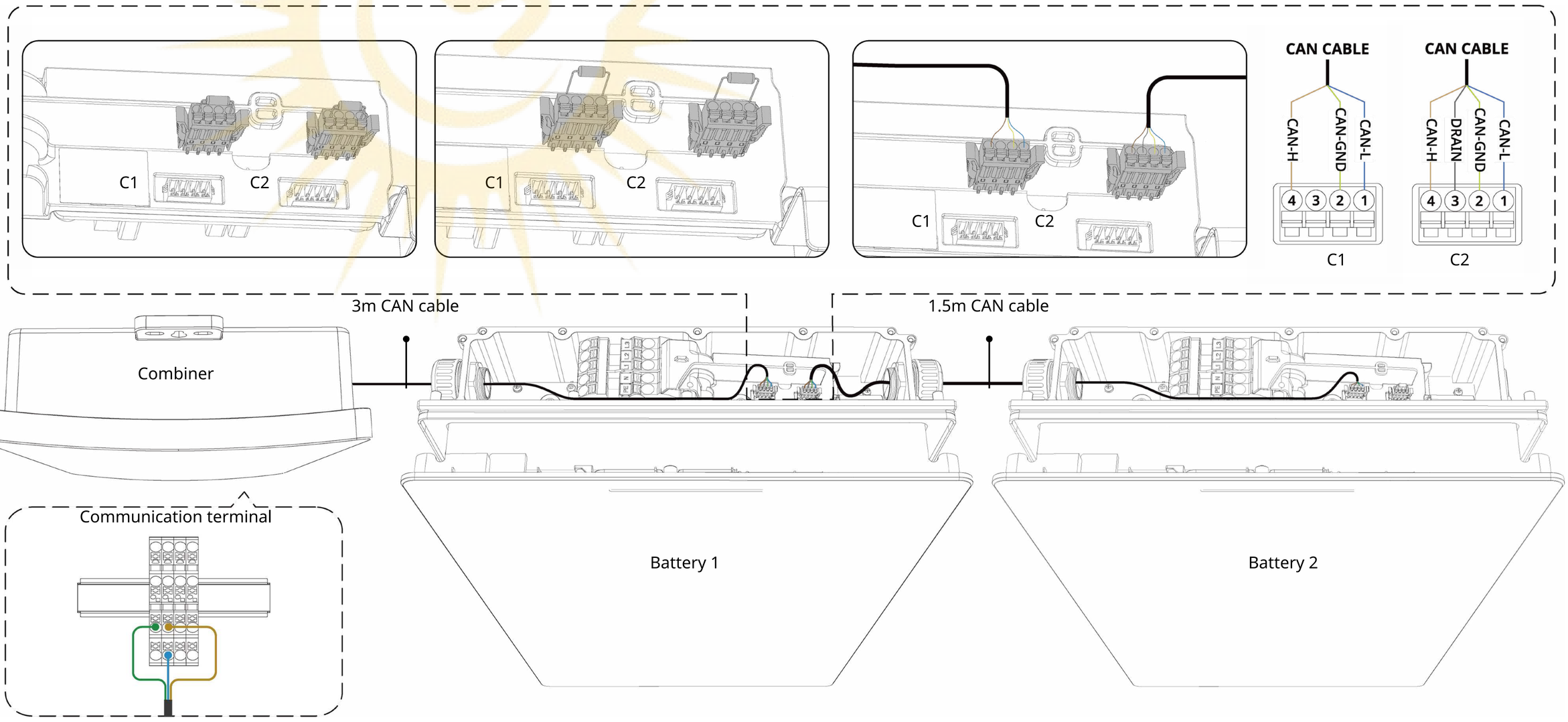

-CAN-H -CAN-L -CAN-GND -DRAIN

© 2025 ATMOCE Holding B.V. All rights reserved.

d. For the battery 2, remove the resistor on the C1 terminal, and then connect the cable to the C1 terminal as below. Please do not perform any operations on the C2 terminal and resistor.

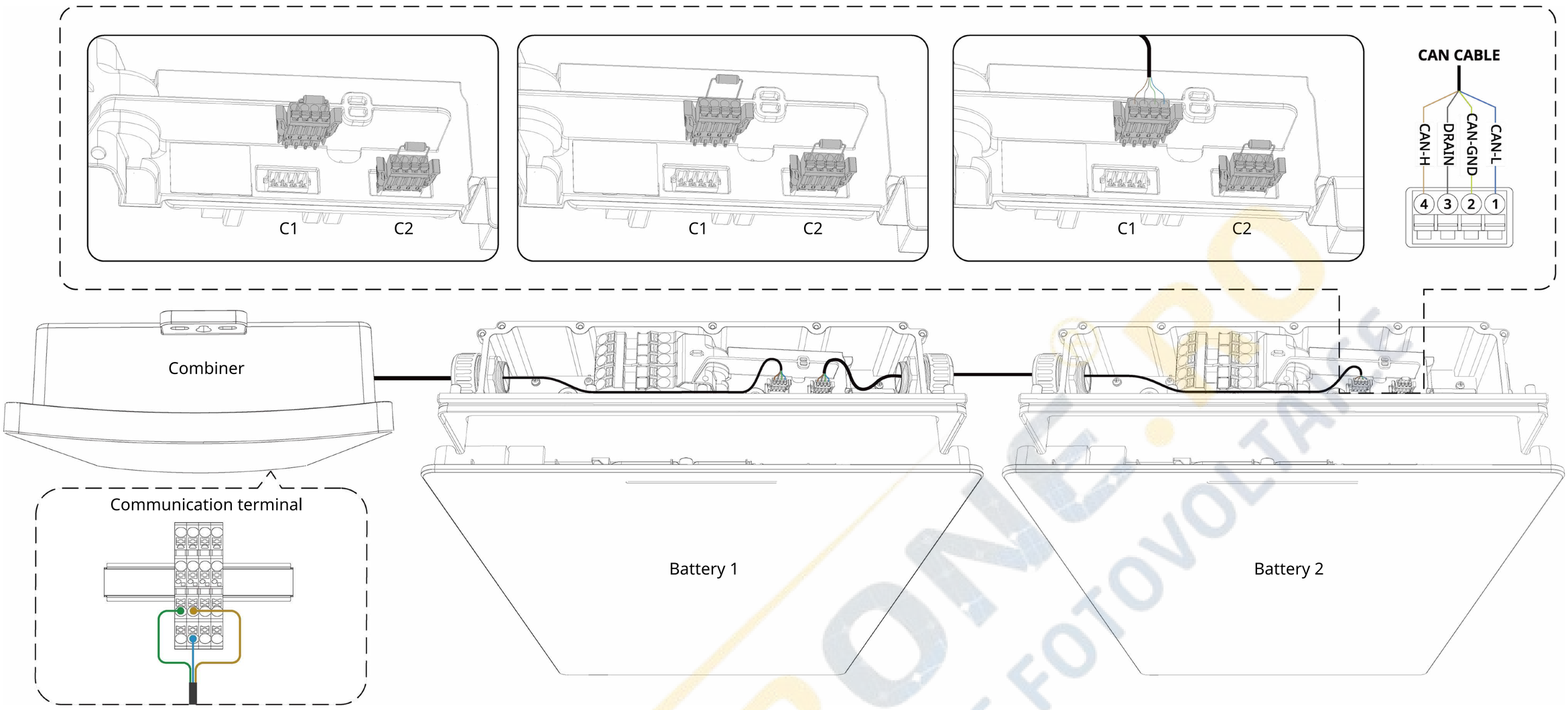

-CAN-H -CAN-L -CAN-GND -DRAIN

e. Arrange the cables and check the wiring is correct.

© 2025 ATMOCE Holding B.V. All rights reserved.

Section B. Wire the power cable

NOTE:

- The cables must connect to the battery breaker and PE terminal in the combiner. Please check the label inside the combiner for more information. Incorrect connection of L and N will damage the equipment.
- When stripping the cables, remove approximately 120 mm of the cable's insulation layer on the left side and 270 mm of the cable's insulation layer on the right side. Then, cover the cable ends by using the proper cold–pressed terminal.
- The length of the PE wire should be approximately 2 cm longer than the other wires.

a. Connect the cables to the battery breaker and PE terminal in the combiner.
b. Bring in the power cables from the combiner through the hole of the battery.
c. Connect the cables to the power and PE terminal block in the battery.

Single-phase application

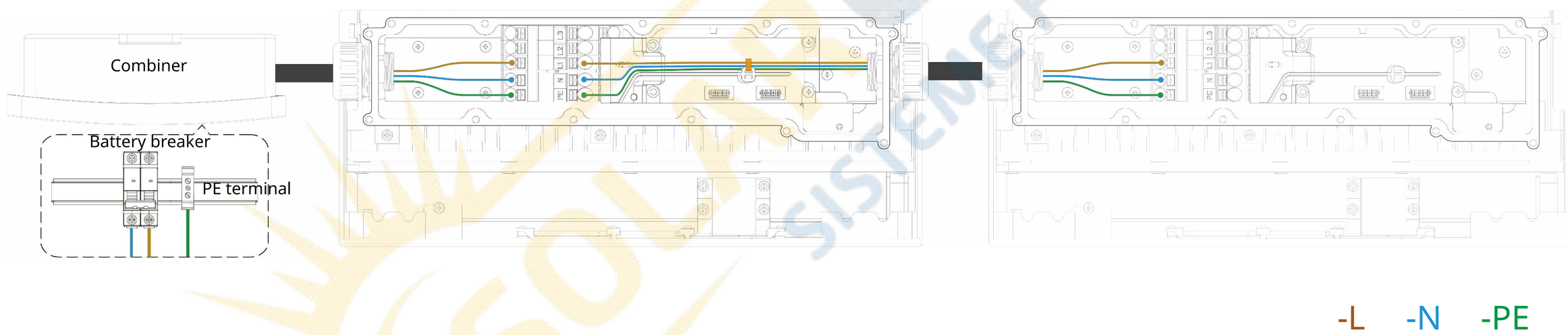

NOTE:

- For single-phase systems, the plug-in bridge must be fully inserted as shown.
- After the installation, confirm that the plug-in bridge is not loose.

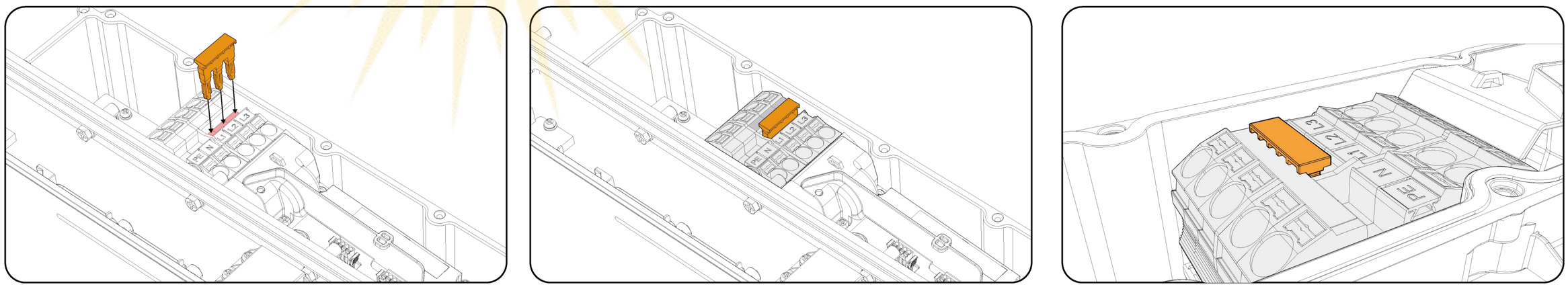

© 2025 ATMOCE Holding B.V. All rights reserved.

Three-phase application

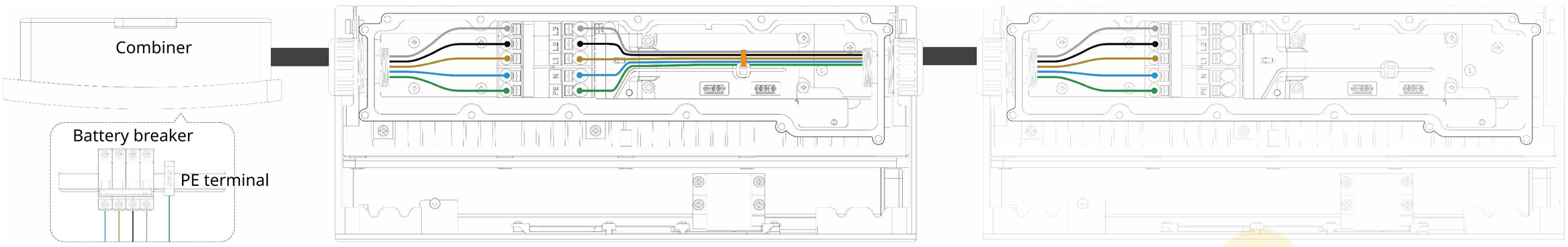

NOTE:

-L1 -L2 -L3 -N -PE

- **For three-phase system, the plug-in bridge is strictly prohibited.**

4.7 Close the cover of the wiring cabinet

a. Re-install the cover. Follow the sequence (from 1 to 13) as shown in the figure to tighten the 13 screws.

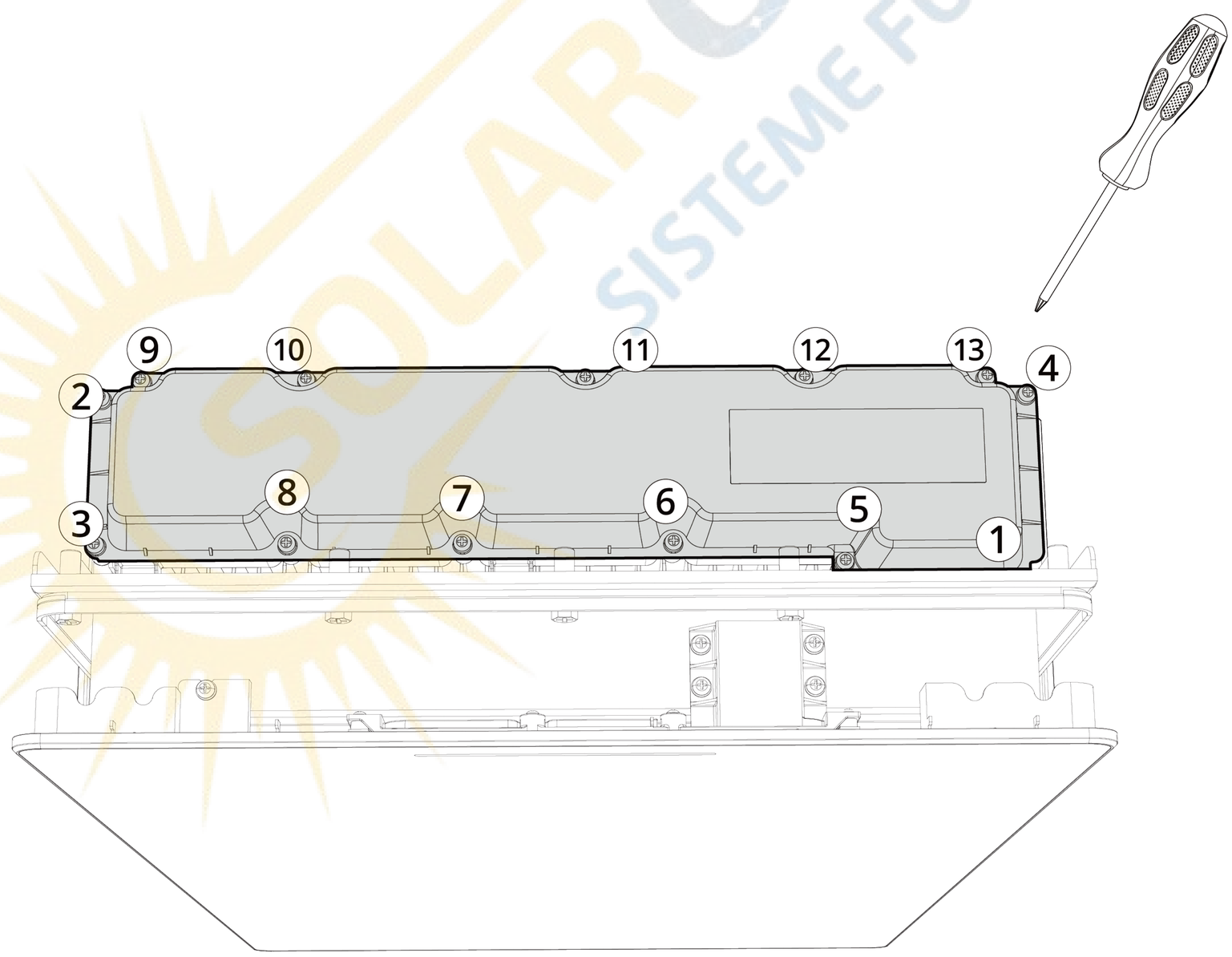

NOTE:

- **Do not use the impact drivers and drills to tighten or loosen the screws.**

© 2025 ATMOCE Holding B.V. All rights reserved.

4.8 Remove the knockout of the upper cover

a. Wear the protective gloves and remove the knockout of the upper cover.

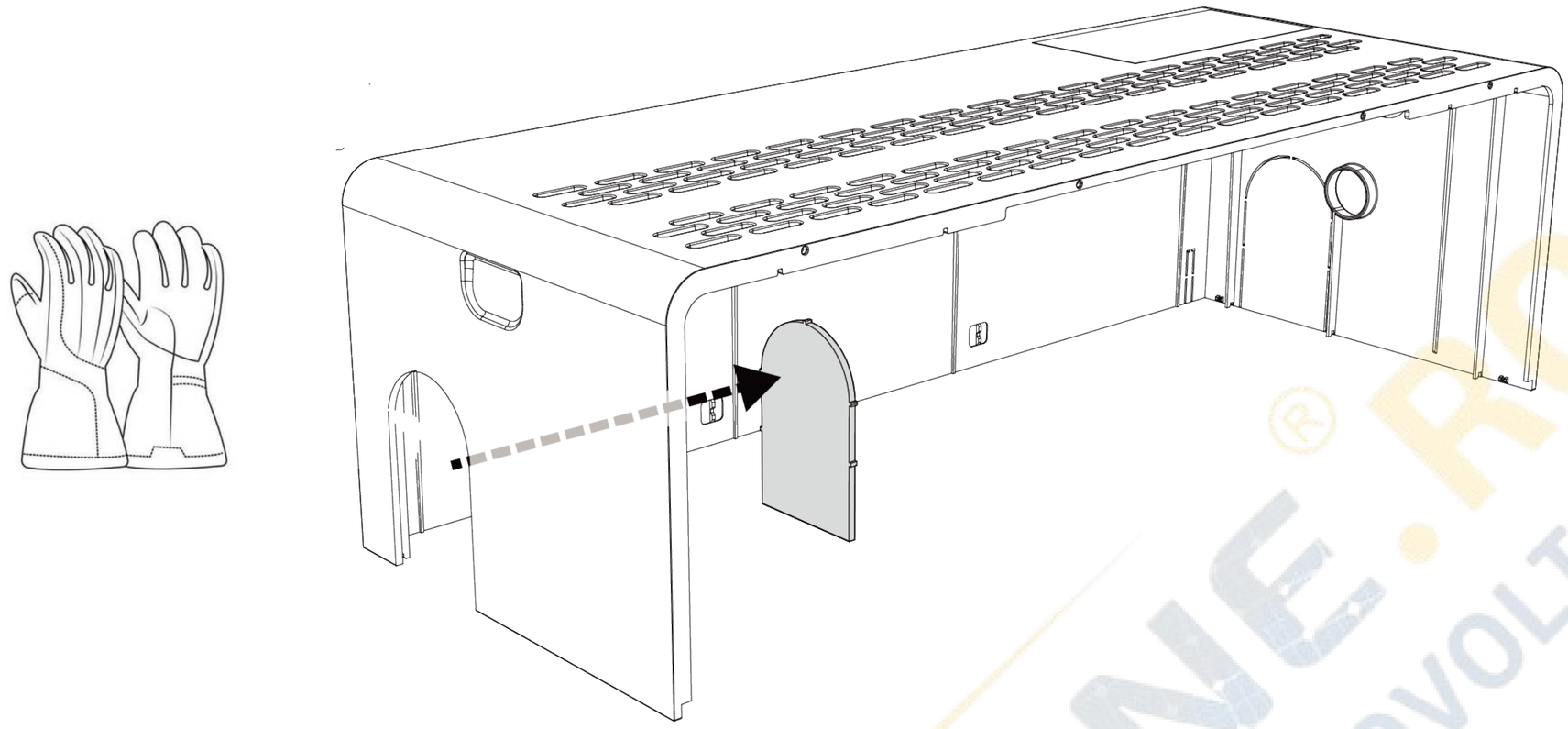

NOTE:

- Please remove the knockout according to the wiring conditions.

4.9 Close the upper cover

a. Close the upper cover.

NOTE:

- For floor mounting, remove the mounting buckles of the upper cover.

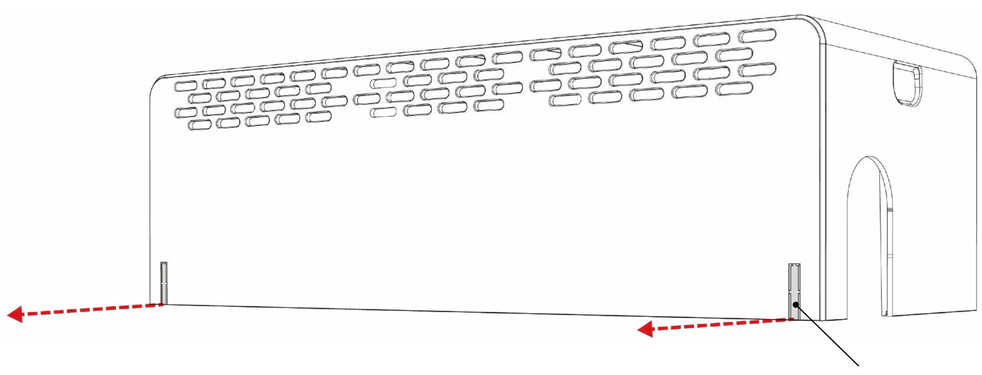

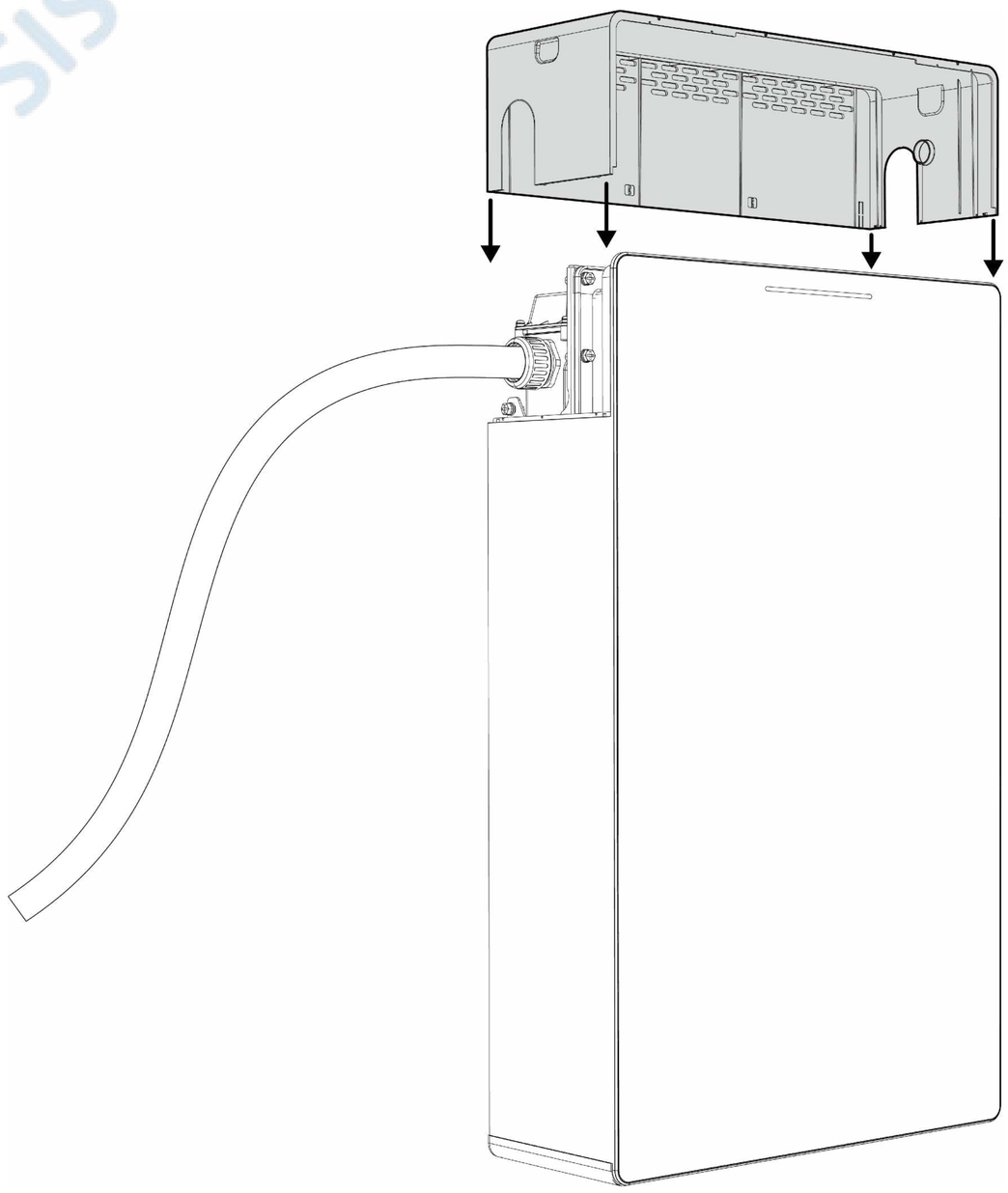

© 2025 ATMOCE Holding B.V. All rights reserved.

4.10 Power on the system

a. Use the multimeter to measure the voltage between the N pole and L1 pole (and/or L2 pole, L3 pole) of the grid connection point. The voltage value should be approximately the nominal phase voltage, e.g. 220 V, 230 V and 240 V.
b. Switch on the battery breaker in the combiner and power on the system.

4.11 Activate the system

a. Log in to the ATMOZEN APP on your mobile phone and follow the deployment guide in the app to activate the system.
b. After the system is activated, the SOC status LED will be solid blue.

SOLARONE.RO SISTEME FOTOVOLTAICE

© 2025 ATMOCE Holding B.V. All rights reserved.

Operation and Maintenance

5.1 M-ELV Battery Working Mode

The battery operating mode supports Self-consumption and Time of Use. The settings are shown in the figure.

a. Tap Site Settings of the site.

b. Select Battery Working Mode to setting.

© 2025 ATMOCE Holding B.V. All rights reserved.

Self-consumption mode

Description:

This system prioritizes the consumption of green energy generated by household photovoltaic (PV) panels to reduce dependence on the grid. The M-ELV batteries store only excess solar power and discharge to supply the household when solar generation is insufficient. This solution is ideal for regions with high electricity prices and low or no feed-in tariff (FIT) subsidies.

Function:

a. **During periods of high solar generation:** The household loads consume solar power directly. Surplus energy is first used to charge the battery; any remaining energy is then exported to the grid.
b. **During periods of low solar generation (e.g., at night):** The system prioritizes battery discharge to power the home. If the household demand exceeds the battery's discharge power, the grid will supply the additional power required.

TOU (Time of use) mode

Description:

Based on the grid's time-of-use electricity rates, the system automatically adjusts the charging and discharging strategy to utilise price differentials and reduce electricity costs. The electricity rate periods must be pre-set. This is suitable for scenarios with significant differences between peak and off-peak electricity rates.

Function:

a. **Charging period:** Prioritise charging the M-ELV battery from the grid and excess solar power generation, with the M-ELV battery not discharging.
b. **Discharging period:** Excess solar power generation can be used to charge the M-ELV battery, which can supply power to the load.
c. **Other period:** Excess solar power generation can be used to charge the M-ELV battery, which does not discharge.

NOTE:

- **In some countries, grid charging of energy storage systems is not permitted, and this mode is prohibited.**
- **This mode requires at least one set of charging time periods or discharging time periods. (In off-grid mode, when the grid power fails, the energy storage system can discharge at any time.)**

© 2025 ATMOCE Holding B.V. All rights reserved.

5.2 M-ELV Battery Recharging Operating Instructions

5.2.1 Grid requirements

ATMOCE battery should connect to a single–phase or a three-phase grid to recharge. Measure AC line voltages at the point of connection to confirm that they are within the ranges.

Phase setup	Voltage range
Single–phase	220V/230V/240V, ± 10%
Three–phase	380/400, ± 10%

5.2.2 Preparation before recharging

All batteries must pass a visual inspection before being recharged. Those that fail must be scrapped. A battery fails the inspection if it exhibits any of the following:

- Deformation
- Casing damage
- Leakage

5.2.3 Recharging steps

a. Open the battery wiring cabinet, complete the system wiring and ensure that the cables are connected correctly. (Refer to Chapter 4, Installation).
b. Connect the AC power cable to the grid.
c. Press and hold the black start button for 30 seconds.
d. Observe the SOC LEDs indicator and wait until the LEDs reach 30% to complete the recharge.
e. After recharging is complete, disconnect the AC cable between the battery and the grid and reinstall the battery.

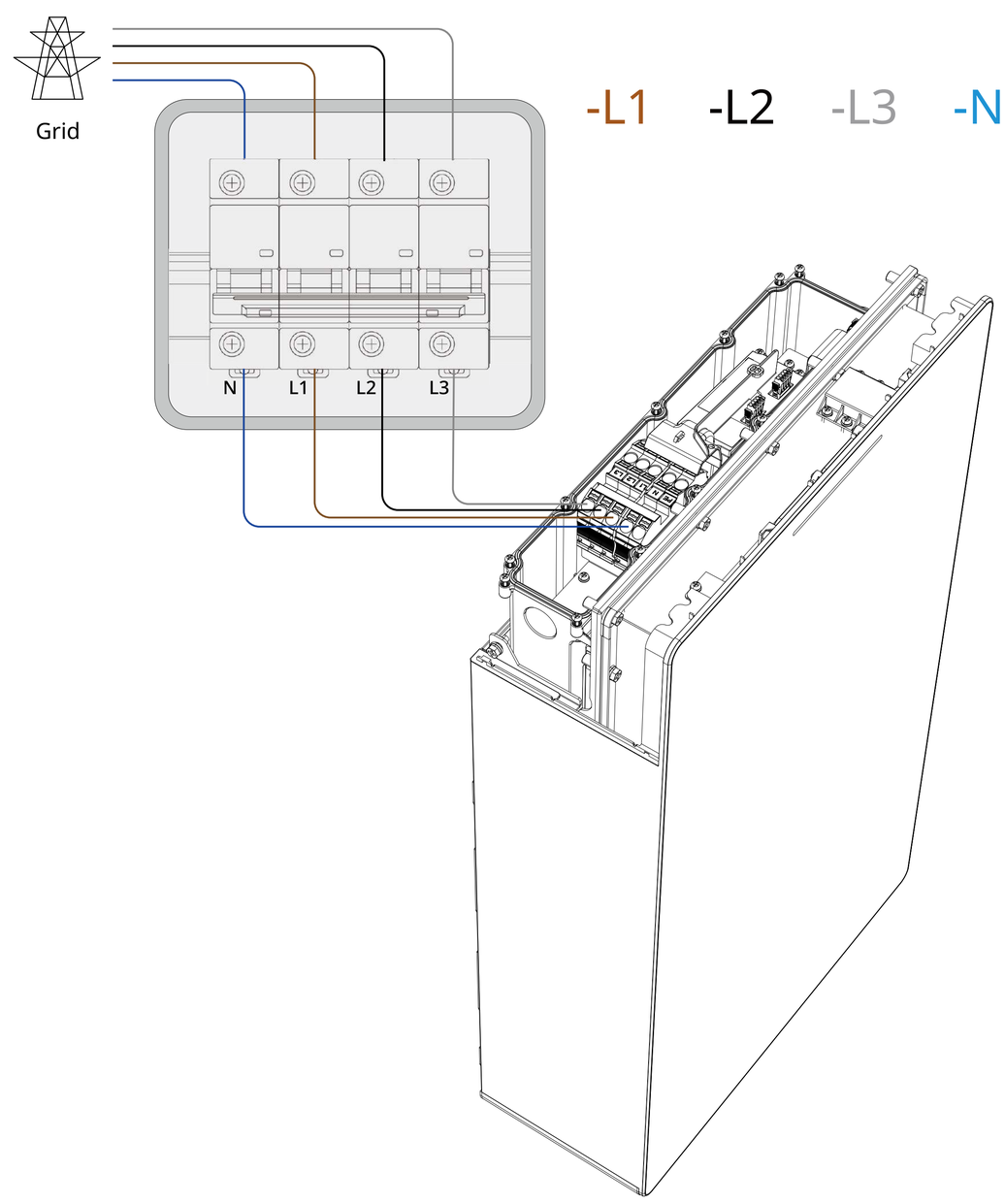

NOTE:

- **The recharging power is 3.75 kVA. Please select the approp riate cable according to local electrical requirements.**

© 2025 ATMOCE Holding B.V. All rights reserved.

5.3 Preconditioning

When temperatures are low, the charging capacity of the M-ELV Battery decreases. To help the M-ELV Battery address this issue, ATMOCE has implemented Preconditioning technology, which enables the M-ELV Battery to operate at temperatures as low as -20°C.

When temperatures drop below freezing, preconditioning activates and heats the battery to enhance operational and charging performance. To heat itself, the M-ELV Battery consumes a small amount of energy, enabling higher-power charging.

NOTE:

- **This mode cannot be customised, as the M-ELV Battery detects internal temperature and automatically activates preconditioning.**
- **During preconditioning, the ATMOZEN APP and ATMOCE Cloud may display the amount of electricity flowing from solar or the grid to the M-ELV Battery, but the battery is not in charging status. This is normal and this energy is used for heating.**
- **The battery will reserves 10% capacity in default value to protect the battery itself.**

© 2025 ATMOCE Holding B.V. All rights reserved.

Troubleshooting

6.1 LED Indicator Description

The M-ELV Battery has two types of LEDs and the following table describes their status.

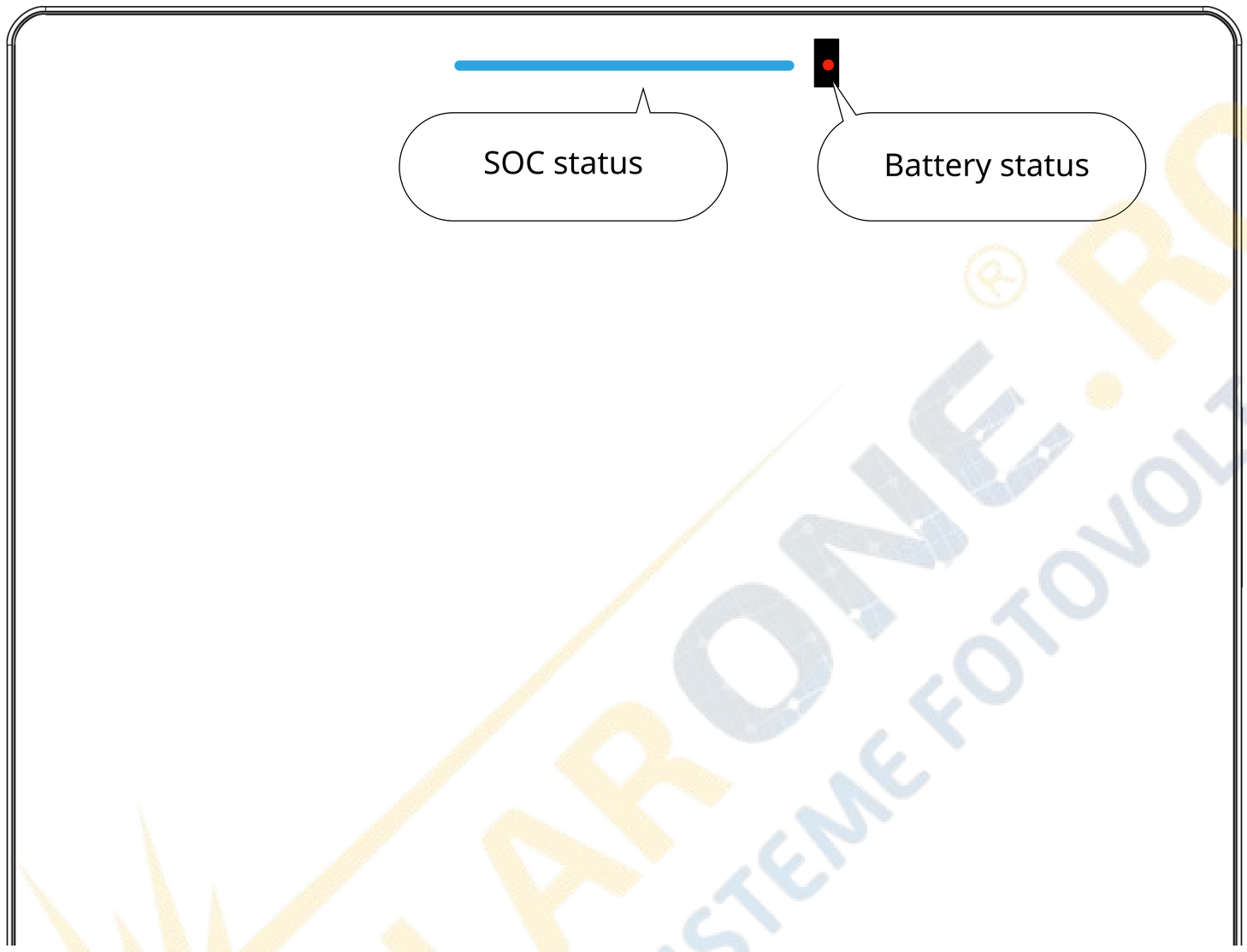

Function	Colour	Description
SOC status	Solid blue	Remaining battery energy percentage
Battery status	Quick flash red	Abnormal working condition
	Solid red	The battery has an internal fault
	Quick flash orange	Upgrading
	Dim	Normal operation

NOTE:

- The state of charge (SOC) accuracy may deviate if the battery is used for the first time, activated after long-term storage, or left in standby mode for a prolonged period. For calibration, please perform a full charge (to 100% SOC) at least once.

© 2025 ATMOCE Holding B.V. All rights reserved.

6.2 Check the alert Codes

The device error codes can be viewed through the following steps in the ATMOZEN app:

a. Tap Status of the site.
b. Select the faulty device to check the details.

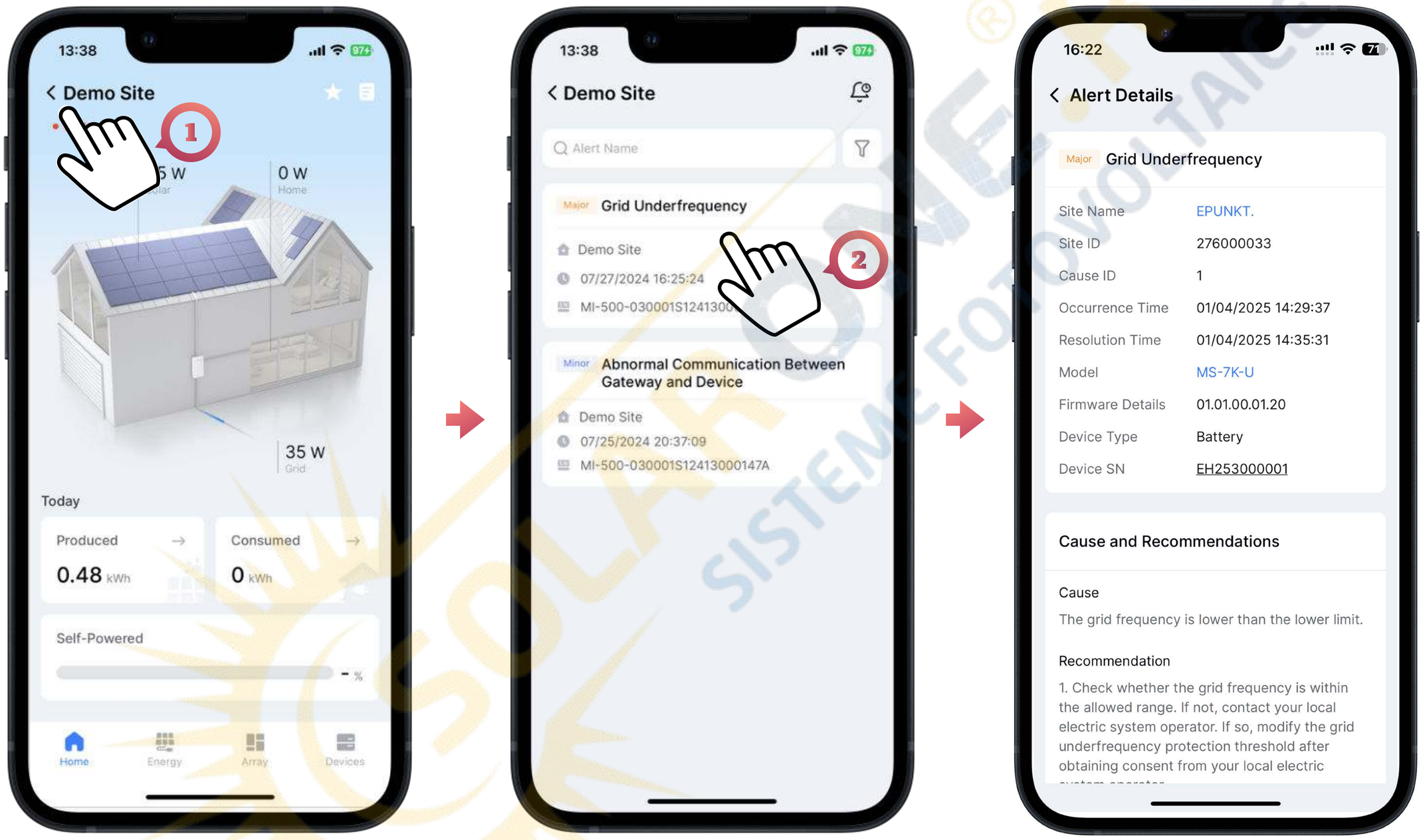

NOTE:

- The alert code check can be performed only after the system has been activated via the ATMOZEN app.
- Alert codes can be checked only when the site status is 'Faulty' or 'Offline'.

© 2025 ATMOCE Holding B.V. All rights reserved.

6.3 Alert Codes List

Code	Issue	Cause	Solution
2	Grid Power Outage	Grid power outage occurred.	• Check whether the grid is normally powered. • Check whether the alternating current cable or breaker is disconnected.
3	Grid Undervoltage	The grid voltage is lower than the lower limit.	• Check whether the grid voltage is within the allowed range. If not, contact your local electric system operator. If so, modify the grid undervoltage protection threshold after obtaining consent from your local electric system operator. • If the fault persists, check whether the alternating current breaker and cable are connected properly.
4	Grid Overvoltage	The grid voltage is higher than the upper limit.	• Check whether the grid voltage is within the allowed range. If not, contact your local electric system operator. If so, modify the grid overvoltage protection threshold after obtaining consent from your local electric system operator. • If the fault persists, check whether the alternating current breaker and cable are connected properly, or whether the cable complies with the recommended specifications.
5	Grid Underfrequency	The grid frequency is lower than the lower limit.	• Check whether the grid frequency is within the allowed range. If not, contact your local electric system operator. If so, modify the grid underfrequency protection threshold after obtaining consent from your local electric system operator.
6	Grid Overfrequency	The grid frequency is higher than the upper limit.	• Check whether the grid frequency is within the allowed range. If not, contact your local electric system operator. If so, modify the grid overfrequency protection threshold after obtaining consent from your local electric system operator.
7	High Output Direct Current Component	The output direct current component is higher than the upper limit.	• The device automatically monitors external working conditions in real time and returns to normal after the fault is resolved. • If the fault occurs frequently, contact your distributor or Customer Service.

© 2025 ATMOCE Holding B.V. All rights reserved.

Code	Issue	Cause	Solution
13	Distribution error occurred.	1. Abnormal phase in the single-phase system. 2. Phase loss in the three-phase system. 3. Reversed phase sequence in the three-phase system. 4. Short circuit in the three-phase system.	• For single-phase battery, check for a short circuit in the AC input. • For three-phase battery, check for phase loss, reversed phase sequence, or short circuits in the AC wiring. • If the alert persists, contact your distributor or Customer Service.
		The single-/three-phase wiring in the battery is inconsistent with the single-/three-phase configuration in the combiner.	• Please check whether the AC distribution wiring of the battery is consistent with the single/three-phase configuration in the combiner. • If the alert persists, contact your distributor or Customer Service.
18	High Output DC Voltage Component	The output DC voltage component is higher than the upper limit.	• The device automatically monitors external working conditions in real time and returns to normal after the fault is resolved. • If the fault occurs frequently, contact your distributor or Customer Service.
50	Battery Overvoltage	The total battery voltage or battery cell voltage exceeds the alert threshold.	• In the app, shut down the battery and then power it on again; • Reset the system in the app; • If the battery is connected to the grid, disconnect the AC input, wait for the battery indicator to go out, and then restore the AC input; • If the alert persists, contact your distributor or Customer Service.
51	Battery Undervoltage	The total battery voltage is below the alert threshold.	• If the battery is connected to the grid, disconnect the AC input, wait for the battery indicator to go out, and then restore the AC input; • Reset the system in the app; • If the alert persists, contact your distributor or Customer Service.
		The voltage of a battery cell is too low.	• If the battery is connected to the grid, disconnect the AC input, wait for the battery indicator to go out, and then restore the AC input; • Reset the system in the app; • If the alert persists, contact your distributor or Customer Service.
52	Large Battery Cell Voltage Difference	The voltage difference between battery cells exceeds the alert threshold.	• If the battery is connected to the grid, disconnect the AC input, wait for the battery indicator to go out, and then restore the AC input. • Reset the system in the app. • If the alert persists, contact your distributor or Customer Service.
53	Battery Overtemperature	1. The battery temperature exceeds the alert threshold 2. The ambient temperature is too high. 3. The fan is not working normally.	• Wait for a while and check if the alert disappears automatically. • If the alert is reported frequently, please ensure that the working conditions of the device are within the allowed range. • If the alert persists, contact your distributor or Customer Service.

© 2025 ATMOCE Holding B.V. All rights reserved.

Code	Issue	Cause	Solution
54	Low Battery Temperature	1. The battery temperature is below the alert threshold. 2. The ambient temperature is too low. 3. The heating system is not working normally.	• Please ensure that the working conditions of the device are within the allowed range. • If the alert persists, contact your distributor or Customer Service.
55	Large Battery Cell Temperature Difference	1. The temperature difference between battery cells exceeds the alert threshold. 2. The fan is not working normally.	• Shut down the battery and then power it on again. • Reset the system. • If the alert is reported frequently, contact your distributor or Customer Service.
56	Battery Overcurrent	The battery current exceeds the alert threshold.	• Wait for a while and check if the alert disappears automatically. • If the alert is reported frequently, reset the system in the app. • If the alert persists, contact your distributor or Customer Service.
57	Low Battery SOH	The battery health metric is below the alert threshold.	• The battery lifespan has reached its end. Please stop using the battery. • Please follow the legal regulations in your country/region and contact local battery recycling services for disposal.
58	Battery Life Terminated	The battery lifespan has reached its end.	• The battery lifespan has reached its end. Please stop using the battery. • Please follow the legal regulations in your country/region and contact local battery recycling services for disposal.
59	Battery Micro-Short Circuit	The battery micro-short circuit fault occurred.	• Please contact your distributor or Customer Service.
60	Battery Thermal Runaway	The battery thermal runaway fault occurred.	• Please immediately disconnect the battery AC input and stop using the battery. • Please contact your distributor or Customer Service.
62	Internal Device Error	The internal circuit fault protection of the battery is triggered.	• In the app, shut down the battery and then power it on again; • Reset the system in the app; • If the battery is connected to the grid, disconnect the AC input, wait for the battery indicator to go out, and then restore the AC input; • If the alert persists, contact your distributor or Customer Service.
		The internal circuit of the battery failed.	• In the app, shut down the battery and then power it on again; • Reset the system in the app; • If the battery is connected to the grid, disconnect the AC input, wait for the battery indicator to go out, and then restore the AC input; • If the alert persists, contact your distributor or Customer Service.
63	Abnormal Communication Between Battery and Gateway	1. The device is shut down. 2. The CAN bus cable between the device and the gateway is abnormal.	• Please ensure that the CAN bus cable between the gateway and battery module is reliably connected. • Reset the system. • If the alert persists, contact your distributor or Customer Serv
64	Active Device Protection	The operating environment of the battery is abnormal.	• The device automatically monitors external working conditions and returns to normal after the fault is resolved. • If the alert is reported frequently, contact your distributor or Customer Service.

© 2025 ATMOCE Holding B.V. All rights reserved.

Technical Data

7.1 M-ELV Battery Data Sheet

Items	Unit	MS-7K-U
Electrical Parameters		
Rated Output Apparent Power	kVA	4.5
Max. Output Apparent Power	kVA	5
Max./Rated Input Apparent Power	kVA	3.75
Input/Output Nominal Voltage	$V_{a.c.}$	1/N/PE ~ 220, 1/N/PE ~ 230 | 3/N/PE ~ 220/380, 3/N/PE ~ 230/400
Operating Voltage Range (L to N)	$V_{a.c.}$	176 - 276
Nominal Frequency	Hz	50 / 60
Frequency Range	Hz	45-55 @50 Hz, 55-65 @60 Hz
AC Max. Input Current	A	17.05 @ 220 Va.c., 5.70 @ 380 $V_{a.c.}$ 16.30 @ 230 Va.c., 5.41 @ 400 $V_{a.c.}$
AC Max. Output Current	A	22.73 @ 220 Va.c., 7.58 @ 380 $V_{a.c.}$ 21.74 @ 230 Va.c., 7.25 @ 400 $V_{a.c.}$
AC Rated Output Current	A	20.45 @ 220 Va.c., 6.82 @ 380 $V_{a.c.}$ 19.57 @ 230 Va.c., 6.52 @ 400 $V_{a.c.}$
AC Round-Trip Efficiency	%	90
THDi	%	<3
Power Factor (On-Grid)		0.8 leading ··· 0.8 lagging
Power Factor (Off-Grid)		1.0 leading ··· 1.0 lagging
Battery		
Rated Battery Energy	kWh	7
Nominal Battery Capacity	Ah	280
Nominal DC Voltage	V	25.6
Max. DC Voltage	V	28.8
Chemistry		Lithium iron phosphate (LFP)
Number of Cycles		10,000
Dc Round-Trip Efficiency	%	96
Mechanical Data		
Dimensions (without Bracket)	mm	830 × 480 × 195 (H x W x D)
Lifting Weight (without Bracket)	kg	73.5
Mounting		Floor or wall mount
Ambient Operating Temperature Range	℃	-20 to 55

© 2025 ATMOCE Holding B.V. All rights reserved.

Items	Unit	MS-7K-U
Optimum Operating Temperature Range	℃	0 to 30
Storage Temperature	℃	-20 to 55
Protection Class		I
Ingress Rating		IP66
Cooling		Intelligent air cooling
Operating Humidity (RH)	%	4 to 100, condensing
Altitude	m	Up to 3,000
Pollution Rating		PD3
Operation Noise	dB	< 35[a]
Protection		
AC Port Overvoltage Class		III
AC Surge Protection		TYPE II
Galvanic Isolation		YES
Insulation Resistance Monitor		YES
Anti-Islanding Protection		YES
Features and Compliance		
Indicator		LEDs for SOC & Status
Communication		CAN
Services[b]		Self-consumption, TOU, Grid ancillary services, Off-grid mode
Cloud Service		ATMOCE Cloud & ATMOZEN APP
Compliance		IEC 62619, ISO 13849, IEC 61000-6-1, IEC 61000-6-3, IEC 63056, IEC 62477-1, VDE- AR-E 2510-50

a. This data is tested from the front of the battery.
b. Work together with ATMOCE Gateway.

© 2025 ATMOCE Holding B.V. All rights reserved.

Appendix 1: Recommended wire diameter

Depending on the quantity and installation method of the batteries, the recommended wire diameter for the power cables is as follows:

a. When the M- ELV battery is used in single-phase mode

Number of sets	Max. Current (A)	Recommendation wire diameter (mm^2)
1	23.8	4 mm^2
2	47.6	10 mm^2
3	50	10 mm^2

b. When the M- ELV battery is used in three-phase mode

Number of sets	Max. Current (A)	Recommendation wire diameter (mm^2)
1	7.9	2.5 mm^2
2	15.9	2.5 mm^2
3	23.9	4 mm^2
4	31.9	6 mm^2
5	39.9	10 mm^2
6	47.9	10 mm^2

NOTE:

- The wire diameter can be adjusted according to local regulations and installation conditions.
- The cable must use copper core cable with a maximum allowable operating temperature of no less than 90°C.

© 2025 ATMOCE Holding B.V. All rights reserved.

Appendix 2: Terms and Abbreviations

AC	Alternating current
APP	Application
CAT 6	Category 6
DC	Direct current
DI	Digital input
DO	Digital output
EMC	Electromagnetic compatibility
ETH	Ethernet
MPPT	Maximum power point tracking
PE	Protective earthing
PV	Photovoltaic
RH	Relative humidity
SN	Serial number
WEEE	Waste electrical and electronic equipment

© 2025 ATMOCE Holding B.V. All rights reserved.

ATMOCE

Contact Details

Company: ATMOCE Holding B.V.

Address: Rokin 92-96, 1012 KZ Amsterdam, the Netherlands

Email: support@atmoce.com

Telephone: +31 20 241 6207

Copyright © Atmoce Holding B.V. 2025. All rights reserved.

No parts of this document may be reproduced or transmitted in any form or by any means without the prior written consent of Atmoce Holding B.V.

Trademark Notice

ATMOCE Atmoce is trademark or registered trademark of Atmoce Holding B.V.

Other trademarks, product names, services, and company names mentioned are the property of their respective owners.

General Disclaimer

The information in this document may contain predictive statements, including, without limitation, statements regarding future financial and operational results, future product portfolios, new technologies, etc. There are a number of factors that could cause actual results and developments to differ materially from those expressed or implied in the predictive statements. Therefore, such information is provided for reference purposes only and constitutes neither an offer nor an acceptance. Atmoce may change the information at any time without notice.