SUN2000-(20KTL, 29.9KTL, 30KTL, 36KTL, 40KTL)-M3

User Manual

Issue	02
Date	2022-02-08

SOLARONE.RO
SISTEME FOTOVOLTAICE

HUAWEI TECHNOLOGIES CO., LTD.

Copyright © Huawei Technologies Co., Ltd. 2022. All rights reserved.

No part of this document may be reproduced or transmitted in any form or by any means without prior written consent of Huawei Technologies Co., Ltd.

Trademarks and Permissions

HUAWEI and other Huawei trademarks are trademarks of Huawei Technologies Co., Ltd.
All other trademarks and trade names mentioned in this document are the property of their respective holders.

Notice

The purchased products, services and features are stipulated by the contract made between Huawei and the customer. All or part of the products, services and features described in this document may not be within the purchase scope or the usage scope. Unless otherwise specified in the contract, all statements, information, and recommendations in this document are provided "AS IS" without warranties, guarantees or representations of any kind, either express or implied.

The information in this document is subject to change without notice. Every effort has been made in the preparation of this document to ensure accuracy of the contents, but all statements, information, and recommendations in this document do not constitute a warranty of any kind, express or implied.

Huawei Technologies Co., Ltd.

Address: Huawei Industrial Base
Bantian, Longgang
Shenzhen 518129
People's Republic of China

Website: https://e.huawei.com

About this Document

Overview

This document describes the SUN2000-20KTL-M3, SUN2000-29.9KTL-M3, SUN2000-30KTL-M3, SUN2000-36KTL-M3, and SUN2000-40KTL-M3 (SUN2000 for short) in terms of their installation, electrical connections, commissioning, maintenance, and troubleshooting. Before installing and operating the SUN2000, ensure that you are familiar with the features, functions, and safety precautions provided in this document.

Intended Audience

This document is applicable to:

- Installers
- Users

Symbol Conventions

The symbols that may be found in this document are defined as follows.

Symbol	Remarks
DANGER	Indicates a hazard with a high level of risk which, if not avoided, will result in death or serious injury.
WARNING	Indicates a hazard with a medium level of risk which, if not avoided, could result in death or serious injury.
CAUTION	Indicates a hazard with a low level of risk which, if not avoided, could result in minor or moderate injury.

Copyright © Huawei Technologies Co., Ltd.

Symbol	Remarks
NOTICE	Indicates a potentially hazardous situation which, if not avoided, could result in equipment damage, data loss, performance deterioration, or unanticipated results. NOTICE is used to address practices not related to personal injury.
NOTE	Supplements the important information in the main text. NOTE is used to address information not related to personal injury, equipment damage, and environment deterioration.

Change History

Changes between document issues are cumulative. The latest document issue contains all changes made in earlier issues.0

Issue 02 (2022-02-08)

Updated **A Grid Code**.

Updated **C Setting Power Adjustment Parameters**.

Issue 01 (2021-09-15)

This issue is the first official release.

Copyright © Huawei Technologies Co., Ltd.

Contents

About this Document ii

1 Safety Information 1

1.1 General Safety 1
1.2 Personnel Requirements 2
1.3 Electrical Safety 3
1.4 Installation Environment Requirements 4
1.5 Mechanical Safety 4
1.6 Commissioning 6
1.7 Maintenance and Replacement 6

2 Overview 7

2.1 Overview 7
2.2 Appearance 9
2.3 Label Description 10
2.4 Working Principles 12
2.4.1 Circuit Diagram 13
2.4.2 Working Modes 13

3 SUN2000 Storage 15

4 Installation 16

4.1 Checking Before Installation 16
4.2 Tool Preparation 17
4.3 Selecting an Installation Position 18
4.4 Moving the SUN2000 22
4.5 Installing the Mounting Bracket 22
4.5.1 Support-mounted Installation 23
4.5.2 Wall-mounted Installation 24
4.6 Installing a SUN2000 25

5 Electrical Connections 28

5.1 Precautions 28
5.2 Preparing Cables 29
5.3 Connecting the PE Cable 32
5.4 Connecting the AC Output Power Cable 34

5.5 Installing the DC Input Power Cable....36
5.6 (Optional) Installing the Smart Dongle....38
5.7 Connecting the Signal Cable....40
5.7.1 Communication Modes....43
5.7.2 (Optional) Connecting the RS485 Communications Cable to the SUN2000....44
5.7.3 (Optional) Connecting the RS485 Communications Cable to the Power Meter....45
5.7.4 (Optional) Connecting the Power Grid Scheduling Signal Cable....46
5.7.5 (Optional) Connecting the Rapid Shutdown Signal Cable....47

6 Commissioning....49
6.1 Checking Before Power-On....49
6.2 System Power-On....50

7 Man-Machine Interaction....52
7.1 Scenario in Which SUN2000s Are Connected to the FusionSolar Smart PV Management System....53
7.1.1 (Optional) Registering an Installer Account....53
7.1.2 Creating a PV Plant and a User....54
7.1.3 (Optional) Setting the Physical Layout of the Smart PV Optimizers....55
7.1.4 Detect optimizer disconnection....57
7.1.5 SmartLogger Networking Scenario....57
7.2 Scenario in Which SUN2000s Are Connected to Other Management Systems....57

8 Maintenance....59
8.1 System Power-Off....59
8.2 Routine Maintenance....60
8.3 Troubleshooting....60

9 Handling the Inverter....71
9.1 Removing the SUN2000....71
9.2 Packing the SUN2000....71
9.3 Disposing of the SUN2000....71

10 Technical Specifications....72

A Grid Code....78

B Device Commissioning....81

C Setting Power Adjustment Parameters....84

D Built-in PID Recovery....86

E Rapid Shutdown....88

F Resetting Password....89

G Setting Dry Contact Scheduling Parameters....90

H AFCI....91

I Smart I-V Curve Diagnosis....93

 Copyright © Huawei Technologies Co., Ltd.

J DRM Configuration Guide for Standard As NZS4777.2.....94

K Acronyms and Abbreviations..... 95

SOLARONE.RO SISTEME FOTOVOLTAICE

1 Safety Information

1.1 General Safety

Statement

Before installing, operating, and maintaining the equipment, read this document and observe all the safety instructions on the equipment and in this document.

The "NOTICE", "CAUTION", "WARNING", and "DANGER" statements in this document do not cover all the safety instructions. They are only supplements to the safety instructions. Huawei will not be liable for any consequence caused by the violation of general safety requirements or design, production, and usage safety standards.

Ensure that the equipment is used in environments that meet its design specifications. Otherwise, the equipment may become faulty, and the resulting equipment malfunction, component damage, personal injuries, or property damage are not covered under the warranty.

Follow local laws and regulations when installing, operating, or maintaining the equipment. The safety instructions in this document are only supplements to local laws and regulations.

Huawei will not be liable for any consequences of the following circumstances:

- Operation beyond the conditions specified in this document
- Installation or use in environments which are not specified in relevant international or national standards
- Unauthorized modifications to the product or software code or removal of the product
- Failure to follow the operation instructions and safety precautions on the product and in this document
- Equipment damage due to force majeure, such as earthquakes, fire, and storms
- Damage caused during transportation by the customer
- Storage conditions that do not meet the requirements specified in this document

 Copyright © Huawei Technologies Co., Ltd.

General Requirements

DANGER

Do not work with power on during installation.

- Do not install, use, or operate outdoor equipment and cables (including but not limited to moving equipment, operating equipment and cables, inserting connectors to or removing connectors from signal ports connected to outdoor facilities, working at heights, and performing outdoor installation) in harsh weather conditions such as lightning, rain, snow, and level 6 or stronger wind.
- After installing the equipment, remove idle packing materials such as cartons, foam, plastics, and cable ties from the equipment area.
- In the case of a fire, immediately leave the building or the equipment area, and turn on the fire alarm bell or make an emergency call. Do not enter the building on fire in any case.
- Do not scrawl, damage, or block any warning label on the equipment.
- Tighten the screws to the specified torque using tools when installing the equipment.
- Understand the components and functioning of a grid-tied PV power system and relevant local standards.
- Repaint any paint scratches caused during equipment transportation or installation in a timely manner. Equipment with scratches cannot be exposed to an outdoor environment for a long period of time.
- Do not open the host panel of the equipment.
- You shall not reverse engineer, decompile, disassemble, adapt, add code to the device software or alter the device software in any other way, research the internal implementation of the device, obtain the device software source code, infringe on Huawei's intellectual property, or disclose any device software performance test results.

Personal Safety

- If there is a probability of personal injury or equipment damage during operations on the equipment, immediately stop the operations, report the case to the supervisor, and take feasible protective measures.
- Use tools correctly to avoid hurting people or damaging the equipment.
- Do not touch the energized equipment, as the enclosure is hot.

1.2 Personnel Requirements

- Personnel who plan to install or maintain Huawei equipment must receive thorough training, understand all necessary safety precautions, and be able to correctly perform all operations.
- Only qualified professionals or trained personnel are allowed to install, operate, and maintain the equipment.
- Only qualified professionals are allowed to remove safety facilities and inspect the equipment.

 Copyright © Huawei Technologies Co., Ltd.

- Personnel who will operate the equipment, including operators, trained personnel, and professionals, should possess the local national required qualifications in special operations such as high-voltage operations, working at heights, and operations of special equipment.
- Only professionals or authorized personnel are allowed to replace the equipment or components (including software).

NOTE

- Professionals: personnel who are trained or experienced in equipment operations and are clear of the sources and degree of various potential hazards in equipment installation, operation, and maintenance
- Trained personnel: personnel who are technically trained, have required experience, are aware of possible hazards on themselves in certain operations, and are able to take protective measures to minimize the hazards on themselves and other people
- Operators: operation personnel who may come in contact with the equipment, except trained personnel and professionals

1.3 Electrical Safety

Grounding

- For the equipment that needs to be grounded, install the ground cable first when installing the equipment and remove the ground cable last when removing the equipment.
- Do not damage the ground conductor.
- Do not operate the equipment in the absence of a properly installed ground conductor.
- Ensure that the equipment is connected permanently to the protective ground. Before operating the equipment, check its electrical connection to ensure that it is securely grounded.

General Requirements

DANGER

Before connecting cables, ensure that the equipment is intact. Otherwise, electric shocks or fire may occur.

- Ensure that all electrical connections comply with local electrical standards.
- Obtain approval from the local electric utility company before using the equipment in grid-tied mode.
- Ensure that the cables you prepared meet local regulations.
- Use dedicated insulated tools when performing high-voltage operations.

 Copyright © Huawei Technologies Co., Ltd.

AC and DC Power

DANGER

Do not connect or disconnect power cables with power on. Transient contact between the core of the power cable and the conductor will generate electric arcs or sparks, which may cause fire or personal injury.

- Before making electrical connections, switch off the disconnector on the upstream device to cut off the power supply if people may contact energized components.
- Before connecting a power cable, check that the label on the power cable is correct.
- If the equipment has multiple inputs, disconnect all the inputs before operating the equipment.

Cabling

- When routing cables, ensure that a distance of at least 30 mm exists between the cables and heat-generating components or areas. This prevents damage to the insulation layer of the cables.
- Bind cables of the same type together. When routing cables of different types, ensure that they are at least 30 mm away from each other.
- Ensure that the cables used in a grid-tied PV power system are properly connected and insulated and meet specifications.

1.4 Installation Environment Requirements

- Ensure that the equipment is installed in a well ventilated environment.
- To prevent fire due to high temperature, ensure that the ventilation vents or heat dissipation system are not blocked when the equipment is running.
- Do not expose the equipment to flammable or explosive gas or smoke. Do not perform any operation on the equipment in such environments.

1.5 Mechanical Safety

Using Ladders

- Use wooden or fiberglass ladders when you need to perform live working at heights.
- When a step ladder is used, ensure that the pull ropes are secured and the ladder is held firm.
- Before using a ladder, check that it is intact and confirm its load bearing capacity. Do not overload it.
- Ensure that the wider end of the ladder is at the bottom, or protective measures have been taken at the bottom to prevent the ladder from sliding.

 Copyright © Huawei Technologies Co., Ltd.

- Ensure that the ladder is securely positioned. The recommended angle for a ladder against the floor is 75 degrees, as shown in the following figure. An angle rule can be used to measure the angle.

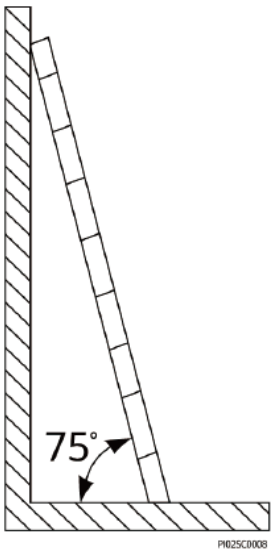

- When climbing a ladder, take the following precautions to reduce risks and ensure safety:
  - Keep your body steady.
  - Do not climb higher than the fourth rung of the ladder from the top.
  - Ensure that your body's center of gravity does not shift outside the legs of the ladder.

Drilling Holes

When drilling holes into a wall or floor, observe the following safety precautions:

- Wear goggles and protective gloves when drilling holes.
- When drilling holes, protect the equipment from shavings. After drilling, clean up any shavings that have accumulated inside or outside the equipment.

Moving Heavy Objects

- Be cautious to avoid injury when moving heavy objects.

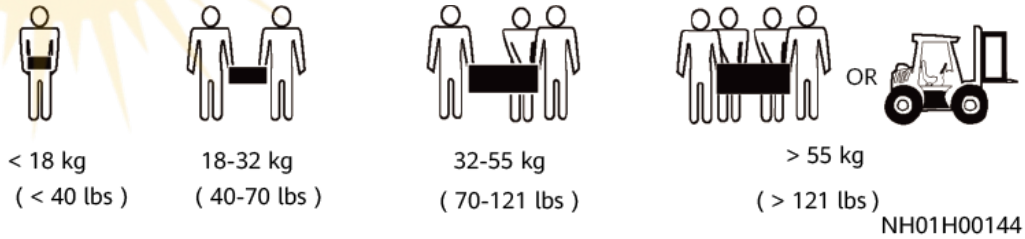

- When moving the equipment by hand, wear protective gloves to prevent injuries.

1.6 Commissioning

When the equipment is powered on for the first time, ensure that professional personnel set parameters correctly. Incorrect settings may result in inconsistency with local certification and affect the normal operation of the equipment.

1.7 Maintenance and Replacement

DANGER

High voltage generated by the equipment during operation may cause an electric shock, which could result in death, serious injury, or serious property damage. Prior to maintenance, power off the equipment and strictly comply with the safety precautions in this document and relevant documents.

- Maintain the equipment with sufficient knowledge of this document and using proper tools and testing equipment.
- Before maintaining the equipment, power it off and follow the instructions on the delayed discharge label to ensure that the equipment is powered off.
- Turn off the AC and DC switches of the SUN2000 when maintaining the electric equipment or power distribution equipment connected the SUN2000.
- Place temporary warning signs or erect fences to prevent unauthorized access to the maintenance site.
- If the equipment is faulty, contact your dealer.
- The equipment can be powered on only after all faults are rectified. Failing to do so may escalate faults or damage the equipment.

 Copyright © Huawei Technologies Co., Ltd.

2 Overview

2.1 Overview

Function

The SUN2000 inverter is a three-phase grid-tied PV string inverter that converts the DC power generated by PV strings into AC power and feeds the power into the power grid.

Model

This document covers the following SUN2000 models:

- SUN2000-20KTL-M3
- SUN2000-29.9KTL-M3
- SUN2000-30KTL-M3
- SUN2000-36KTL-M3
- SUN2000-40KTL-M3

NOTE

The SUN2000-20KTL-M3 supports 220 V (line voltage) power grids.

Figure 2-1 Model description (SUN2000-30KTL-M3 is used as an example)

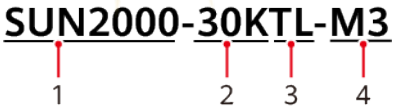

Table 2-1 Model description

ID	Meaning	Value
1	Series name	SUN2000: three-phase grid-tied PV string inverter

ID	Meaning	Value
2	Power class	• 20K: rated power of 20 kW • 29.9K: rated power of 29.9 kW • 30K: rated power of 30 kW • 36K: rated power of 36 kW • 40K: rated power of 40 kW
3	Topology	TL: transformerless
4	Product code	M3: product series with an input voltage level of 1100 V DC[a]

Note a: The maximum DC input voltage of SUN2000-20KTL-M3 is 800 V. For details, see **10 Technical Specifications**.

Networking Application

The SUN2000 applies to the grid-tied systems of industrial and commercial rooftops and small ground PV plants. Typically, a grid-tied system consists of PV strings, grid-tied inverters, AC switches, and power distribution units.

Figure 2-2 Networking application - single inverter scenario

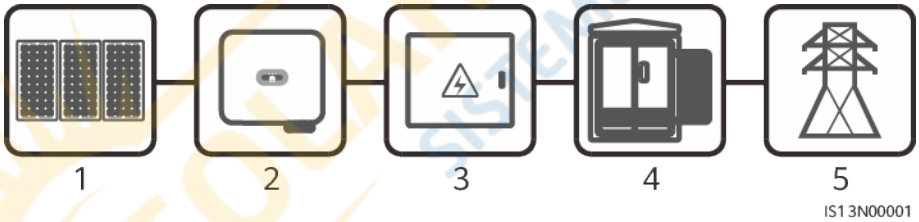

(1) PV string (2) SUN2000 (3) AC power distribution unit

(4) Isolation transformer (5) Power grid

Supported Power Grid Types

The SUN2000 supports TN-S, TN-C, TN-C-S, TT, and IT power grids.

Figure 2-3 Power grid types

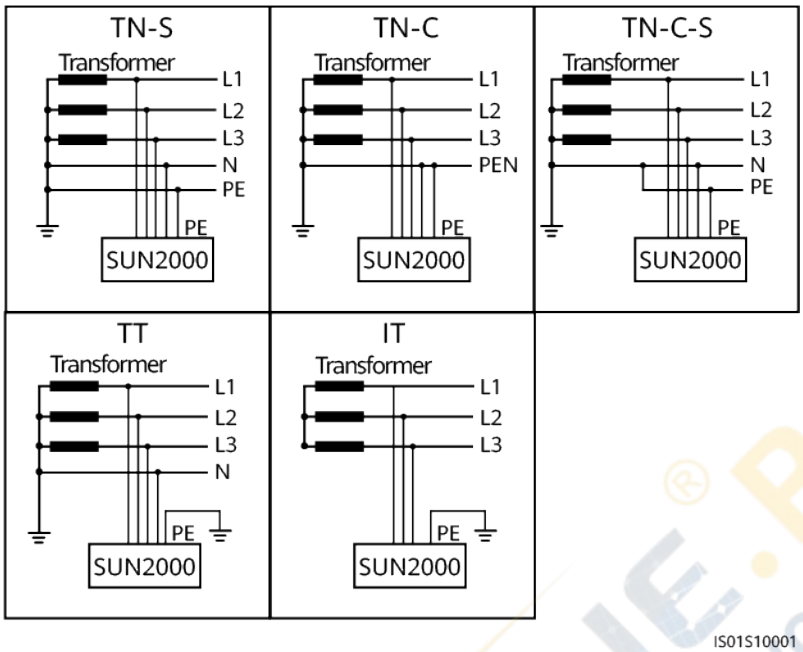

2.2 Appearance

Figure 2-4 Appearance

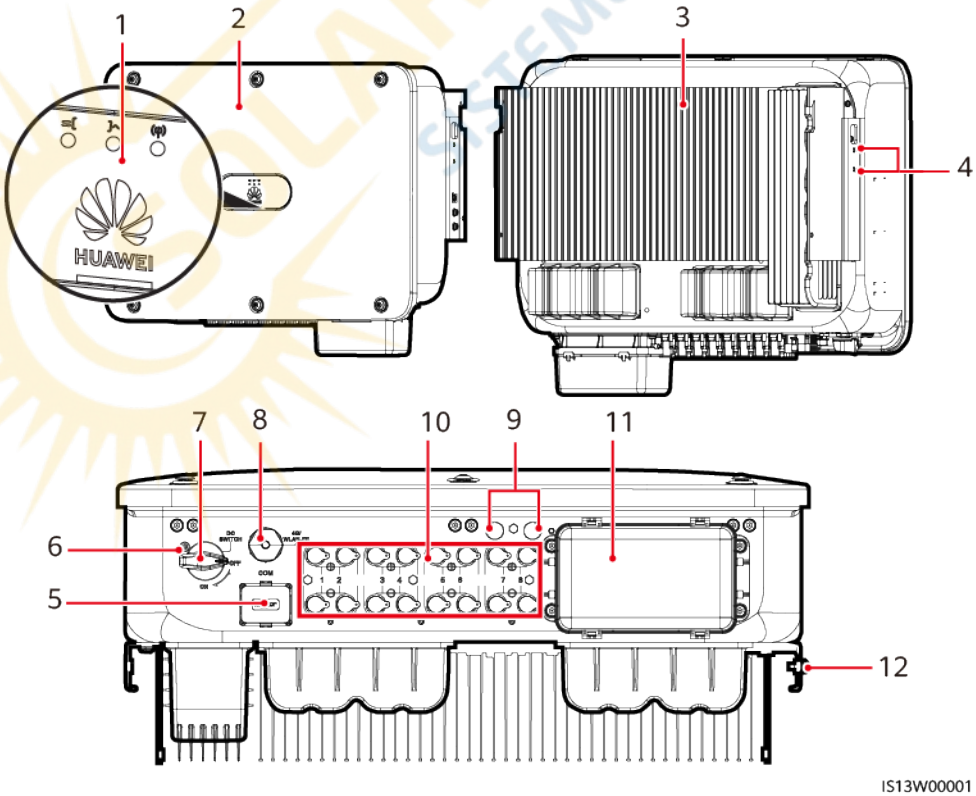

(1) LED indicator	(2) Front panel
(3) Heat sink	(4) Screws for fixing the awning
(5) Communications port (COM)	(6) Hole for the DC switch locking screw
(7) DC switch (DC SWITCH)	(8) Smart Dongle port (4G/WLAN-FE)
(9) Ventilation valve	(10) DC input terminals (PV1–PV8)
(11) AC output port	(12) Ground point

2.3 Label Description

Nameplate

Figure 2-5 Nameplate

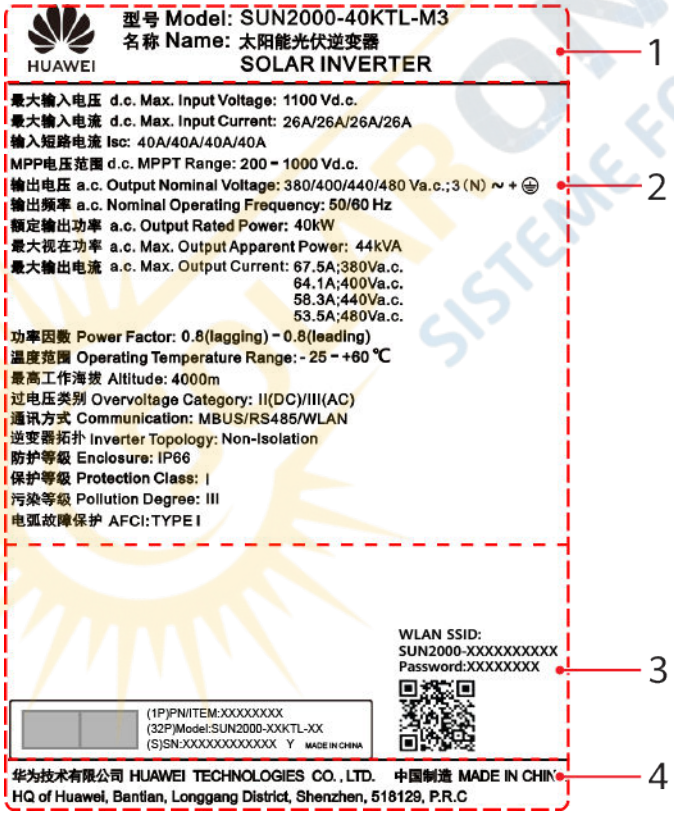

(1) Trademark and product model	(2) Key technical parameters
(3) Label information	(4) Company name and country of origin

NOTE

The nameplate figure is for reference only.

Enclosure Labels

Symbol	Name	Description
	Delay discharge	Residual voltage exists after the SUN2000 is powered off. It takes 5 minutes for the SUN2000 to discharge to the safe voltage.
	Burn warning	Do not touch a running SUN2000 because it generates high temperatures on the shell.
	Electric shock warning	• High voltage exists after the SUN2000 is powered on. Only qualified and trained electrical technicians are allowed to perform operations on the SUN2000. • High touch current exists after the SUN2000 is powered on. Before powering on the SUN2000, ensure that the SUN2000 is properly grounded.
	Refer to documentation	Reminds operators to refer to the documents delivered with the SUN2000.
	Grounding label	Indicates the position for connecting the PE cable.
	Operation warning	Do not remove the DC input connector or AC output connector with power on.

Symbol	Name	Description
	Weight label	The SUN2000 is heavy and needs to be carried by three persons.
	Burn warning on inverter handles	Do not touch the handles within 10 minutes after the inverter is shut down.
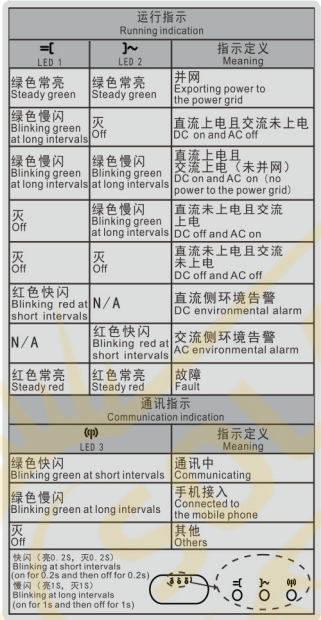	Indicator	Indicates the SUN2000 operating information.
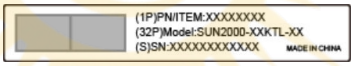	SUN2000 serial number	Indicates the serial number.
	SUN2000 Wi-Fi login QR code	Scan the QR code to connect to the Huawei SUN2000 Wi-Fi network.

2.4 Working Principles

2.4.1 Circuit Diagram

A SUN2000 can connect to a maximum of eight PV strings and has four MPPT circuits inside. Each MPPT circuit tracks the maximum power point of two PV strings. The SUN2000 converts DC power into single-phase AC power through an inverter circuit. Surge protection is supported on both the DC and AC sides.

Figure 2-6 Schematic diagram

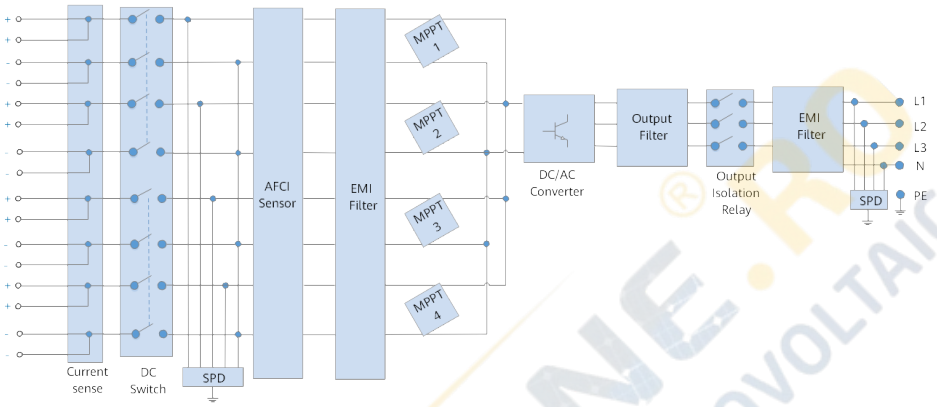

2.4.2 Working Modes

The SUN2000 can work in Standby, Operating, or Shutdown mode.

Figure 2-7 Working modes

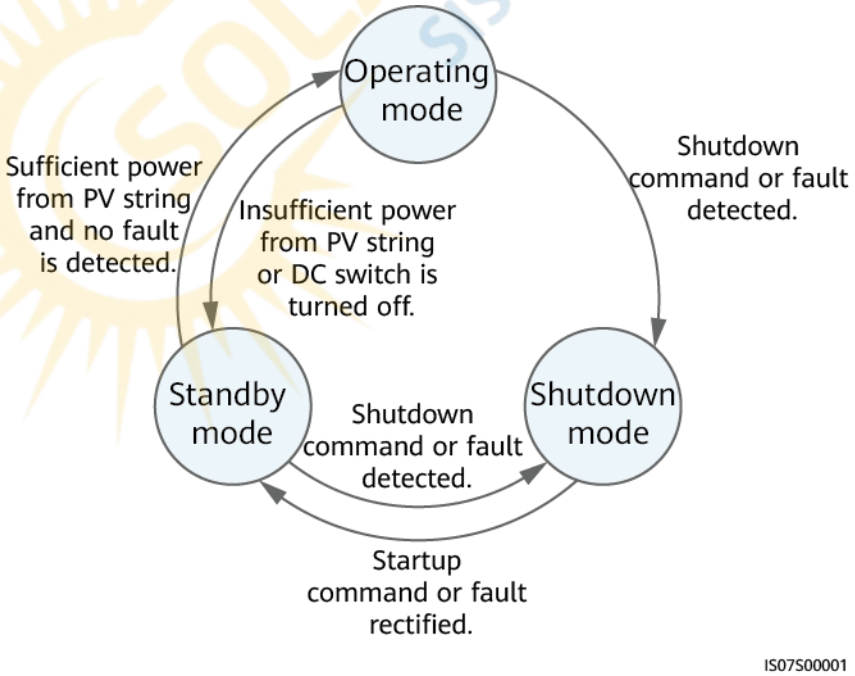

Table 2-2 Working mode description

Working Mode	Description
Standby	The SUN2000 enters Standby mode when the external environment does not meet the operating requirements. In Standby mode: ● The SUN2000 continuously performs status check and enters the Operating mode once the operating requirements are met. ● The SUN2000 enters Shutdown mode after detecting a shutdown command or a fault after startup.
Operating	In Operating mode: ● The SUN2000 converts DC power from PV strings into AC power and feeds the power to the power grid. ● The SUN2000 tracks the maximum power point to maximize the PV string output. ● If the SUN2000 detects a fault or a shutdown command, it enters the Shutdown mode. ● The SUN2000 enters Standby mode after detecting that the PV string output power is not suitable for connecting to the power grid for generating power.
Shutdown	● In Standby or Operating mode, the SUN2000 enters Shutdown mode after detecting a fault or shutdown command. ● In Shutdown mode, the SUN2000 enters Standby mode after detecting a startup command or that the fault is rectified.

 Copyright © Huawei Technologies Co., Ltd.

3 SUN2000 Storage

The following requirements should be met if the SUN2000 is not put into use directly:

- Do not unpack the SUN2000.
- Keep the storage temperature at –40°C to +70°C and the humidity at 5%–95% RH.
- Store the SUN2000 in a clean and dry place and protect it from dust and water vapor corrosion.
- A maximum of six SUN2000s can be stacked. To avoid personal injury or device damage, stack SUN2000s with caution to prevent them from falling over.
- During the storage period, check the SUN2000 periodically (recommended: every three months). If any rodent bites are found on the packing materials, replace the packing materials immediately.
- If the SUN2000 has been stored for more than two years, it must be checked and tested by professionals before being put into use.

 Copyright © Huawei Technologies Co., Ltd.

4 Installation

4.1 Checking Before Installation

Outer Packing Materials

Before unpacking the inverter, check the outer packing materials for damage, such as holes and cracks, and check the inverter model. If any damage is found or the inverter model is not what you requested, do not unpack the package and contact your supplier as soon as possible.

NOTE

You are advised to remove the packing materials within 24 hours before installing the inverter.

Package Contents

After unpacking the inverter, check that the contents are intact and complete. If any damage is found or any component is missing, contact your supplier.

NOTE

For details about the number of contents, see the *Packing List* in the packing case.

 Copyright © Huawei Technologies Co., Ltd.

4.2 Tool Preparation

Type	Tools and Instruments		
Installation	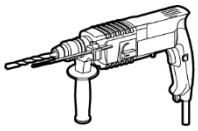 Hammer drill (with a Φ14 mm drill bit and a Φ16 mm drill bit)	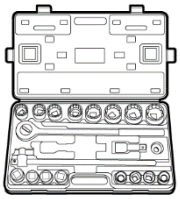 Torque socket and wrench	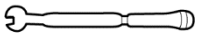 Torque wrench
	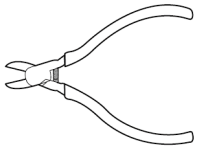 Diagonal pliers	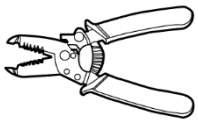 Wire stripper	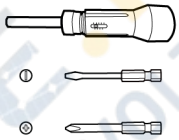 Torque screwdriver
	Rubber mallet	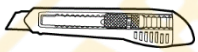 Utility knife	Cable cutter
	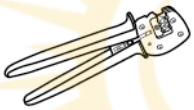 Crimping tool (model: PV-CZM-22100)	Open-end wrench (model: PV-MS-HZ or PV-MS open-end wrench)	Cable tie
	Vacuum cleaner	Multimeter (DC voltage measurement range ≥ 1100 V DC)	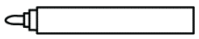 Marker

Type	Tools and Instruments		
	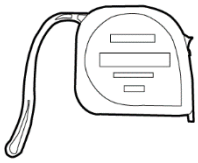 Steel measuring tape	Level	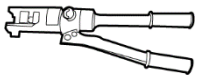 Hydraulic pliers
	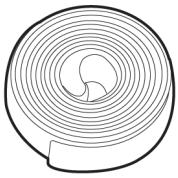 Heat shrink tubing	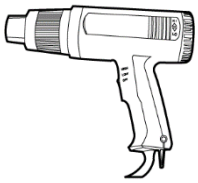 Heat gun	-
Personal protective equipment (PPE)	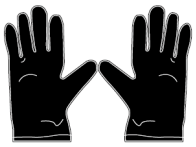 Safety gloves	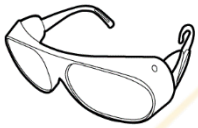 Safety goggles	Anti-dust mask
	Safety boots	-	-

4.3 Selecting an Installation Position

Basic Requirements

- The SUN2000 is IP66-rated and can be installed indoors or outdoors.
- Do not install the SUN2000 in a place where a person can easily be exposed to its enclosure and heat sinks, because these parts are extremely hot during operation.
- Do not install the SUN2000 in areas with flammable or explosive materials.
- Do not install the SUN2000 in a place within children's reach.
- The SUN2000 will be corroded in salt areas, and the salt corrosion may cause fire. Do not install the SUN2000 outdoors in salt areas. A salt area refers to the region within 500 m from the coast or prone to sea breeze. The effect from sea breeze depends on weather conditions (such as typhoon and season wind) or terrains (such as dams and hills).

Site Requirements

- The SUN2000 should be installed in a well-ventilated environment to ensure good heat dissipation.
- If the SUN2000 is installed in a place exposed to direct sunlight, the power may decrease as the temperature rises.
- You are advised to install the SUN2000 in a sheltered place or install an awning over it.

Mounting Structure Requirements

- The mounting structure where the SUN2000 is installed must be fire resistant.
- Do not install the SUN2000 on flammable building materials.
- The SUN2000 is heavy. Ensure that the installation surface is solid enough to bear the weight load.
- In residential areas, do not install the SUN2000 on drywalls or walls made of similar materials which have a weak sound insulation performance because the noise generated by the SUN2000 is noticeable.

Installation Angle Requirements

The SUN2000 can be wall-mounted or support-mounted. Requirements for the installation angle:

- Install the SUN2000 vertically or at a maximum back tilt of 15 degrees to facilitate heat dissipation.
- Do not install the SUN2000 with a front tilt, excessive back tilt, side tilt, horizontally, or upside down.

Figure 4-1 Installation angle

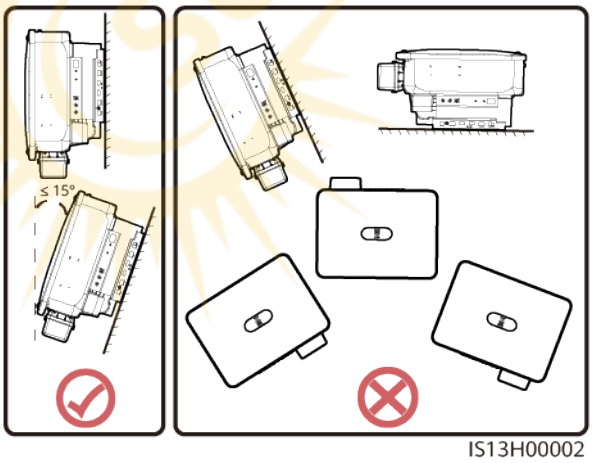

Installation Space Requirements

- Reserve enough clearance around the SUN2000 to ensure sufficient space for installation and heat dissipation.

Figure 4-2 Installation space

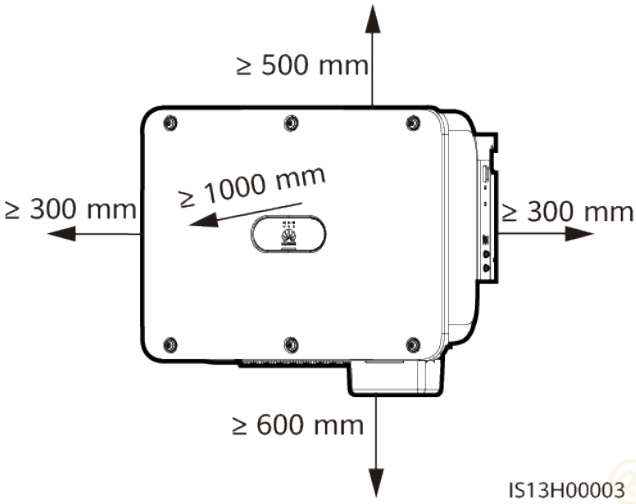

- When installing multiple SUN2000s, install them in horizontal mode if ample space is available and install them in triangle mode if no ample space is available. Stacked installation is not recommended.

Figure 4-3 Horizontal installation (recommended)

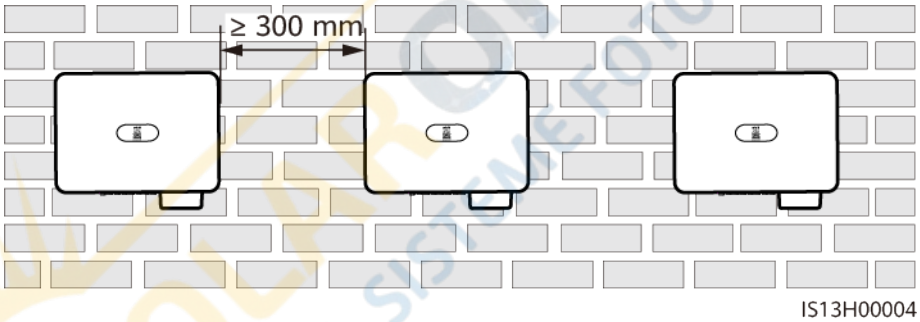

Figure 4-4 Two-layer triangle installation (recommended)

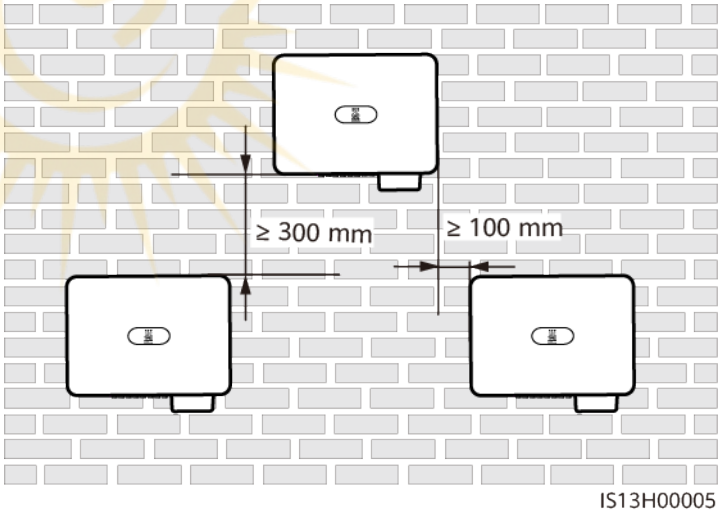

Figure 4-5 Three-layer triangle installation (not recommended)

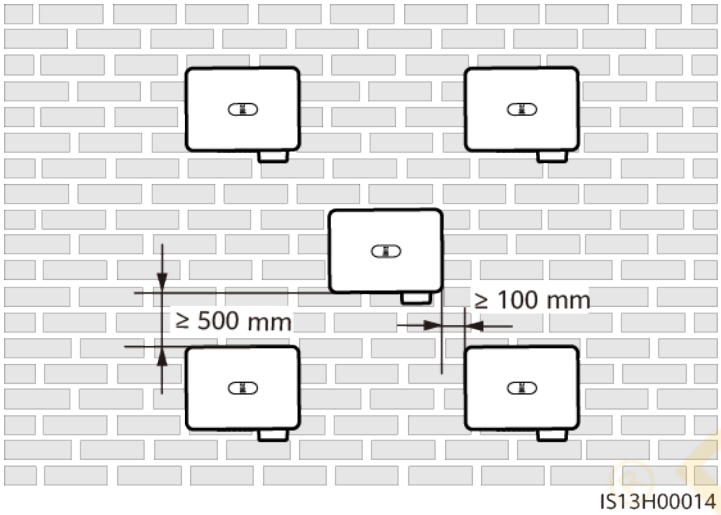

Figure 4-6 Stacked installation (not recommended)

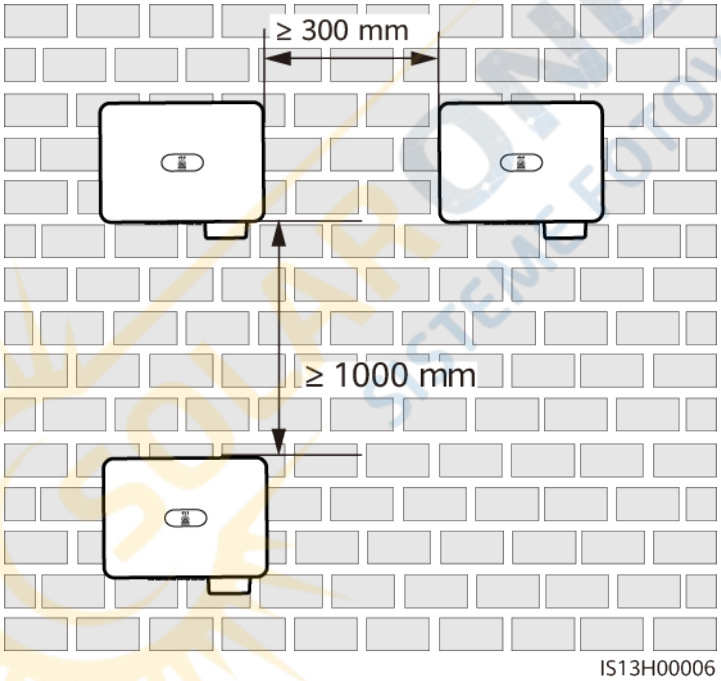

Figure 4-7 Back-to-back installation (not recommended)

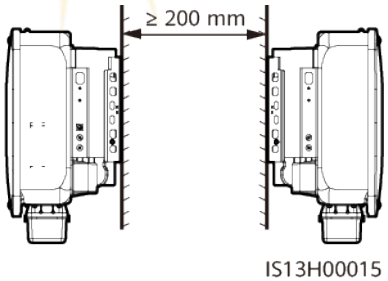

NOTE

The installation diagrams are for reference only and are irrelevant to the SUN2000 cascading scenario.

4.4 Moving the SUN2000

Procedure

Step 1 Lift the SUN2000 from the packing case and move it to the specified installation position.

CAUTION

- Move the SUN2000 with care to prevent device damage and personal injury.
- Do not use the wiring terminals and ports at the bottom to support any weight of the SUN2000.
- Place a foam pad or cardboard under the SUN2000 to protect the SUN2000 enclosure from damage.

Figure 4-8 Moving the SUN2000

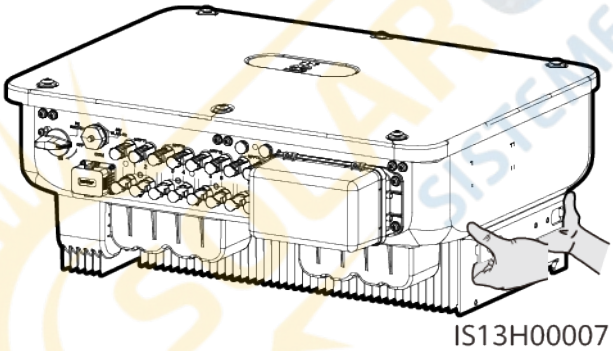

----End

4.5 Installing the Mounting Bracket

Installation Precautions

Before installing the mounting bracket, remove the security Torx wrench and set it aside.

Figure 4-9 Position for binding the security Torx wrench

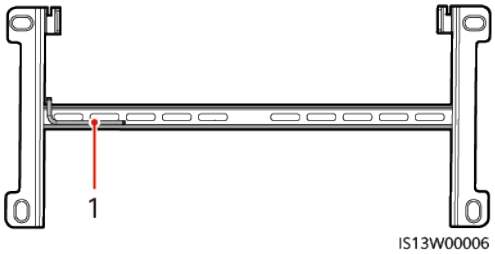

(1) Security Torx wrench

Figure 4-10 shows the dimensions of the mounting holes for the SUN2000.

Figure 4-10 Mounting bracket dimensions

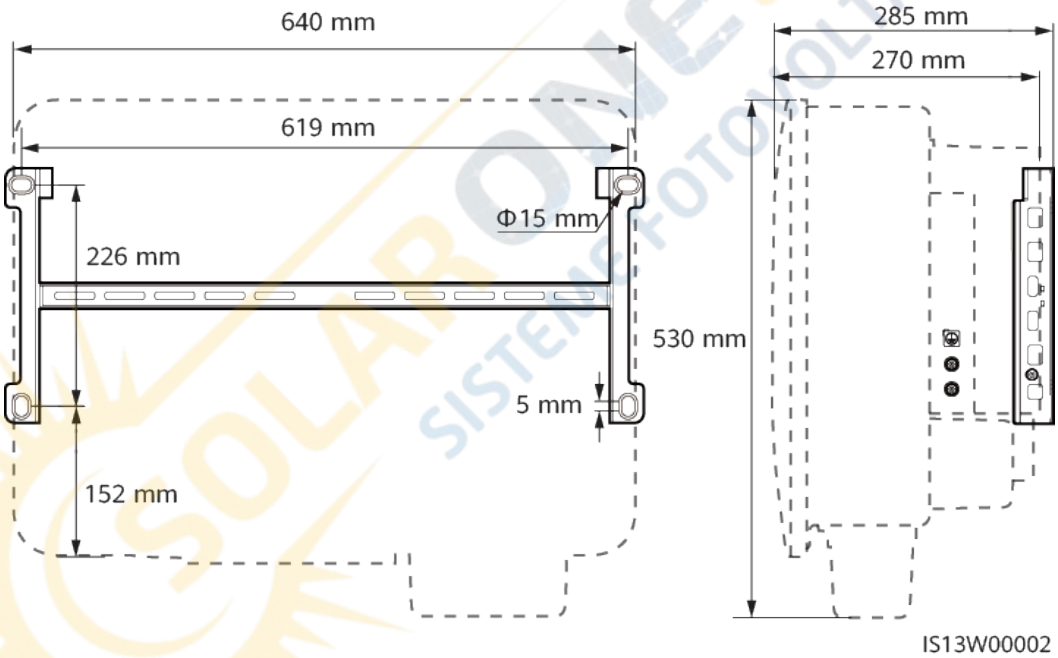

4.5.1 Support-mounted Installation

Procedure

Step 1 Secure the mounting bracket.

Figure 4-11 Securing the mounting bracket

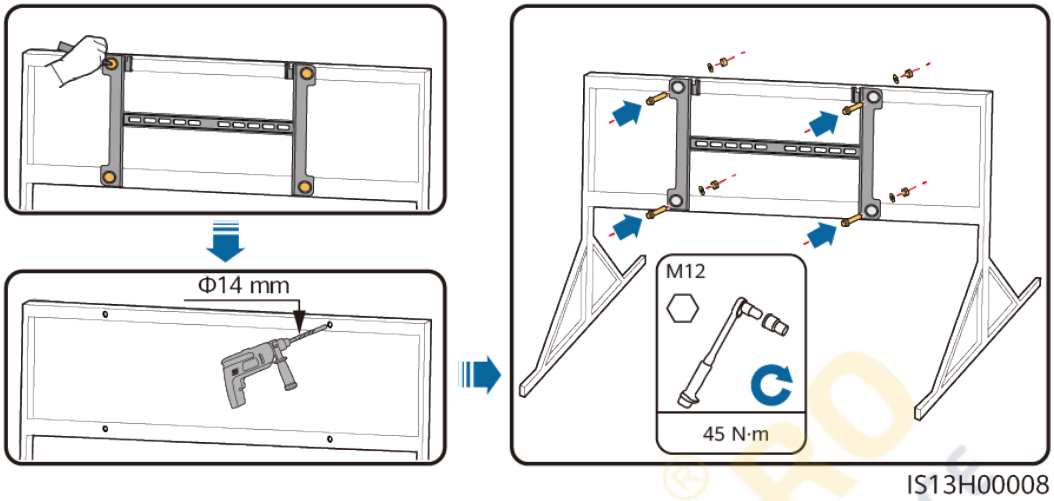

NOTE

You are advised to apply anti-rust paint on the hole positions for protection.

----End

4.5.2 Wall-mounted Installation

Prerequisites

To install the SUN2000, you need to prepare expansion bolts. M12x60 stainless steel expansion bolts are recommended.

Procedure

Step 1 Determine the positions for drilling holes and mark the positions using a marker.

Step 2 Secure the mounting bracket.

DANGER

Avoid drilling holes in the water pipes and cables buried in the wall.

Figure 4-12 Expansion bolt composition

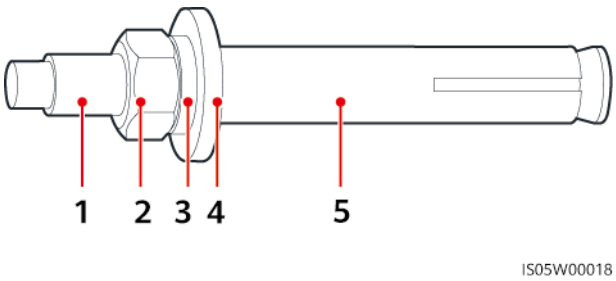

(1) Bolt (2) Nut (3) Spring washer

(4) Flat washer (5) Expansion sleeve

NOTICE

- To prevent dust inhalation or contact with eyes, wear safety goggles and an anti-dust mask when drilling holes.
- Clean up any dust in and around the holes using a vacuum cleaner and measure the distance between holes. If the holes are inaccurately positioned, drill holes again.
- Level the front of the expansion sleeve with the concrete wall after removing the bolt, spring washer, and flat washer. Otherwise, the mounting bracket will not be securely installed on the concrete wall.

Figure 4-13 Installing expansion bolts

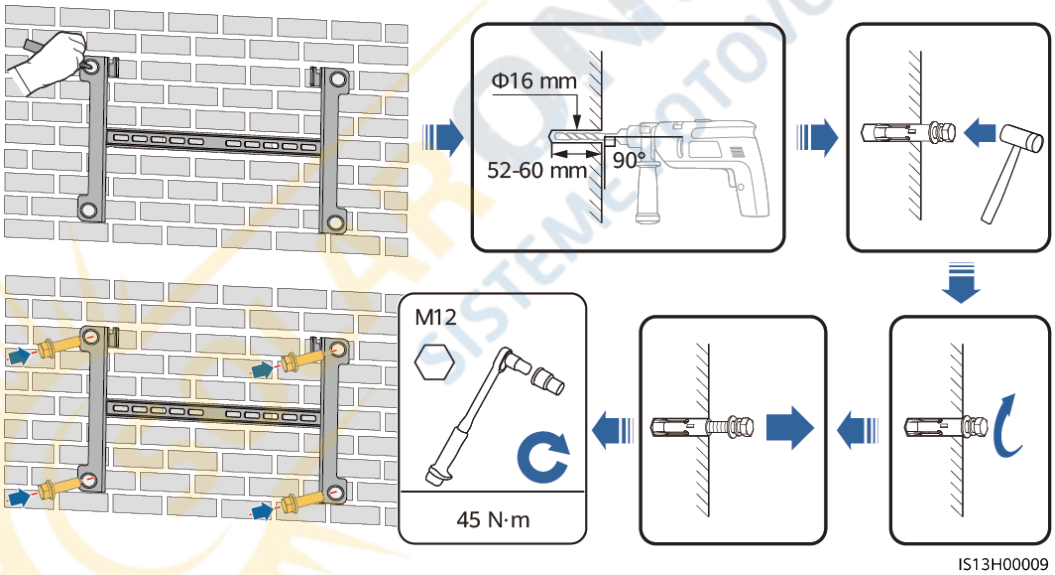

----End

4.6 Installing a SUN2000

Step 1 (Optional) Install the locking screw for the DC switch.

NOTE

- The DC switch locking screw is used to lock the DC switch to prevent the switch from rotating.
- For models used in Australia, install the DC switch locking screw according to local standards. The DC switch locking screw is delivered with the SUN2000.

Figure 4-14 Installing the locking screw for the DC switch

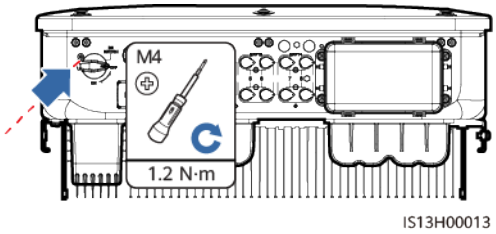

Step 2 Install the SUN2000 onto the mounting bracket.

Figure 4-15 Installing a SUN2000

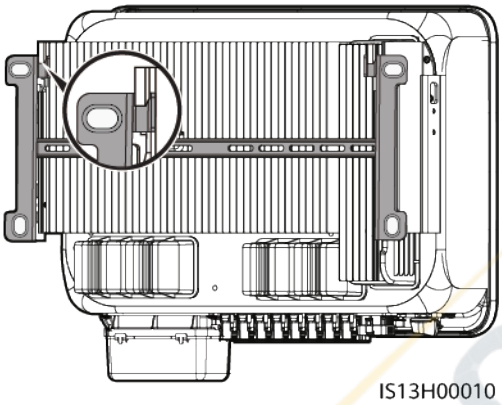

Step 3 Tighten the nuts on both sides of the SUN2000.

Figure 4-16 Tightening the nut

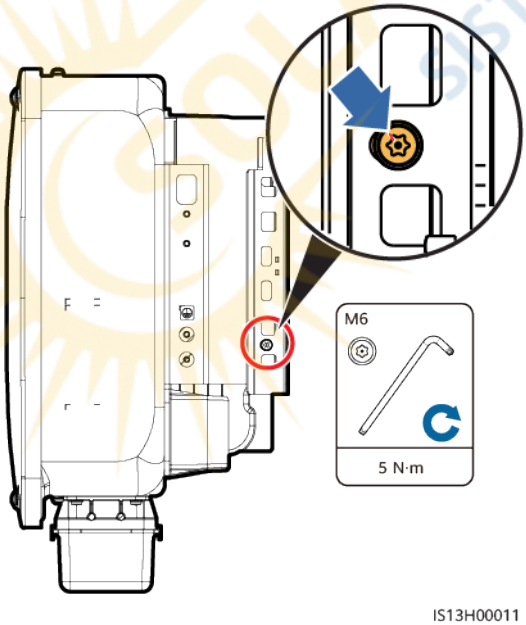

NOTICE

Secure the screws on the sides before connecting cables.

----End

SOLARONE.RO SISTEME FOTOVOLTAICE

5 Electrical Connections

5.1 Precautions

DANGER

When exposed to sunlight, the PV arrays supply DC voltage to the SUN2000. Before connecting cables, ensure that the two DC switches on the SUN2000 are OFF. Otherwise, the high voltage of the SUN2000 may result in electric shocks.

WARNING

- The equipment damage caused by incorrect cable connections is beyond the warranty scope.
- Only certified electrician can perform electrical terminations.
- Wear proper PPE at all time when terminating cables.
- To prevent poor cable connection due to overstress, it is recommended that the cables be bent and reserved, and then connected to the appropriate ports.

NOTE

The cable colors shown in the electrical connection diagrams provided in this chapter are for reference only. Select cables in accordance with local cable specifications (green-and-yellow cables are only used for grounding).

 Copyright © Huawei Technologies Co., Ltd.

5.2 Preparing Cables

Figure 5-1 SUN2000 cable connections (dashed boxes indicate optional components)

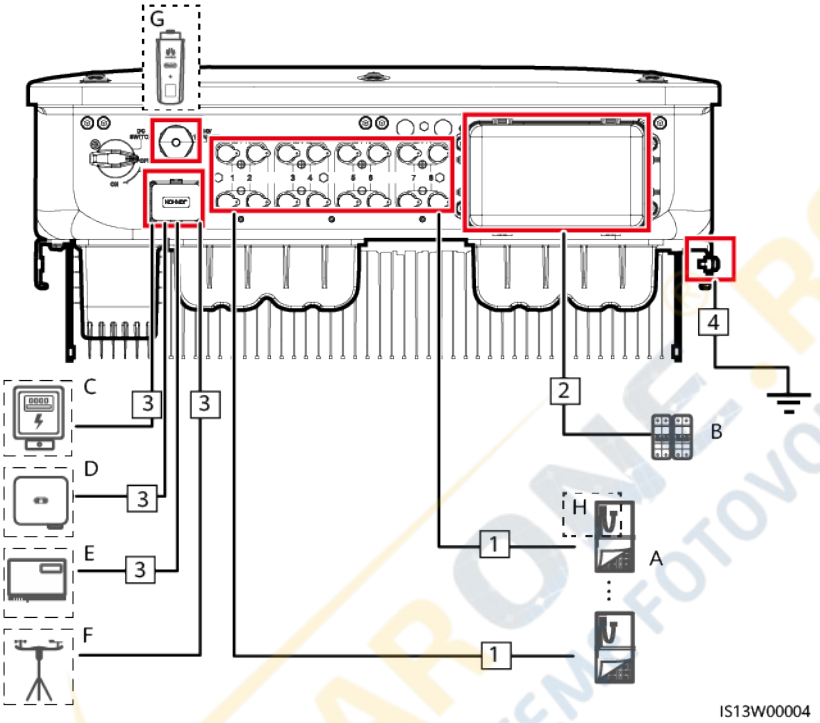

Table 5-1 Components

No.	Component	Description	Source
A	PV string	• A PV string consists of PV modules connected in series. • The SUN2000 supports the input from eight PV strings.	Prepared by users
B	AC switch	Recommended: a three-phase AC circuit breaker with a rated voltage greater than or equal to 500 V AC and a rated current of: • 63 A (SUN2000-29.9KTL/30KTL-M3) • 80 A (SUN2000-20KTL-M3) • 100 A (SUN2000-36KTL/40KTL-M3)	Prepared by users
C	Power meter	The SUN2000 can connect to the DTSU666-H power meter.	Prepared by users

No.	Component	Description	Source
		The following third-party power meters are supported: ABB-A44, Schneider-PM1200, Janitza-UMG604, Janitza-UMG103-CBM, Janitza-UMG104, GAVAZZI-EM340-DIN AV2 3 X S1 X, REAL ENERGY SYSTEM-PRISMA-310A, Algodue-UPM209, Mitsubishi-LMS-0441E, and WEG-MMW03-M22CH When the WEG-MMW03-M22CH power meter is connected, set **Baud rate** to **9600**.When the Mitsubishi-LMS-0441E power meter is connected, set **Parity mode** to **No parity**, and **Baud rate** to **9600**.	
D	SUN2000	Select a proper model as required.	Purchased from Huawei
E	SmartLogger	The SmartLogger1000A, SmartLogger2000, and SmartLogger3000 are supported.	Purchased from Huawei
F	Environmental monitoring instrument (EMI)	When the SmartLogger is used, the EMI can be directly connected to the SmartLogger or connected to the last solar inverter cascaded over RS485.	Prepared by users
G	Smart Dongle	Select a proper model as required.	Purchased from Huawei
H	(Optional) Smart PV optimizer	The SUN2000-450W-P smart PV optimizer is supported.	Purchased from Huawei

NOTE

In the SUN2000 cascading scenario, the master inverter model can be SUN2000-20KTL/29.9KTL/30KTL/36KTL/40KTL-M3, and the slave inverter model can be SUN2000-(3KTL-12KTL)-M0/M1, SUN2000-(12KTL-20KTL)-M0/M2, SUN2000-50KTL/60KTL/65KTL-M0, SUN2000-(100KTL, 110KTL, 125KTL) series, SUN2000-29.9KTL/36KTL/42KTL, or SUN2000-33KTL-A.

NOTICE

The cable specifications must comply with local standards.

Table 5-2 Cable description

No.	Cable	Type	Recommended Specifications	Source
1	DC input power cable	Common PV cable in the industry (Recommended model: PV1-F)	• Conductor cross-sectional area: 4–6 mm^2 • Cable outer diameter: 5.5–9 mm	Prepared by users
2	AC output power cable	Outdoor copper-core/aluminum-core cable	• Conductor cross-sectional area: 16-50 mm^2 outdoor copper-core cable or 35-50 mm^2 outdoor aluminum-core cable • Cable outer diameter: 16–38 mm	Prepared by users
3	(Optional) Signal cable	Two-core outdoor shielded twisted pair (recommended model: DJYP2VP2-2x2x0.75)	• Conductor cross-sectional area: 0.2–1 mm^2 • Cable outer diameter: 4–11 mm	Prepared by users
4	PE cable	Single-core outdoor copper-core cable	Conductor cross-sectional area ≥ 16 mm^2	Prepared by users
Note a: Five-core cables with a cross-sectional area of 5 x 35 mm^2 or 5 x 50 mm^2 are not supported.				

NOTICE

If the SUN2000 is used with an optimizer, route the AC and DC power cables separate to avoid interference to the communication of the optimizer.

5.3 Connecting the PE Cable

DANGER

- Ensure that the PE cable is securely connected. Otherwise, electric shocks may occur.
- Do not connect the neutral wire to the enclosure as a PE cable. Otherwise, electric shocks may occur.

NOTE

- The PE point at the AC output port is used only as a PE equipotential point, not a substitute for the PE point on the enclosure.
- It is recommended that silicone sealant or paint be applied around the ground terminal after the PE cable is connected.

Procedure

Step 1 Crimp OT terminals.

NOTICE

- Avoid scratching the core wire when stripping a cable.
- The cavity formed after the conductor crimp strip of the OT terminal is crimped must wrap the core wires completely. The core wires must contact the OT terminal closely.
- Wrap the wire crimping area with heat shrink tubing or PVC insulation tape. The heat shrink tubing is used as an example.
- When using a heat gun, protect devices from being scorched.

 Copyright © Huawei Technologies Co., Ltd.

Figure 5-2 Crimping an OT terminal

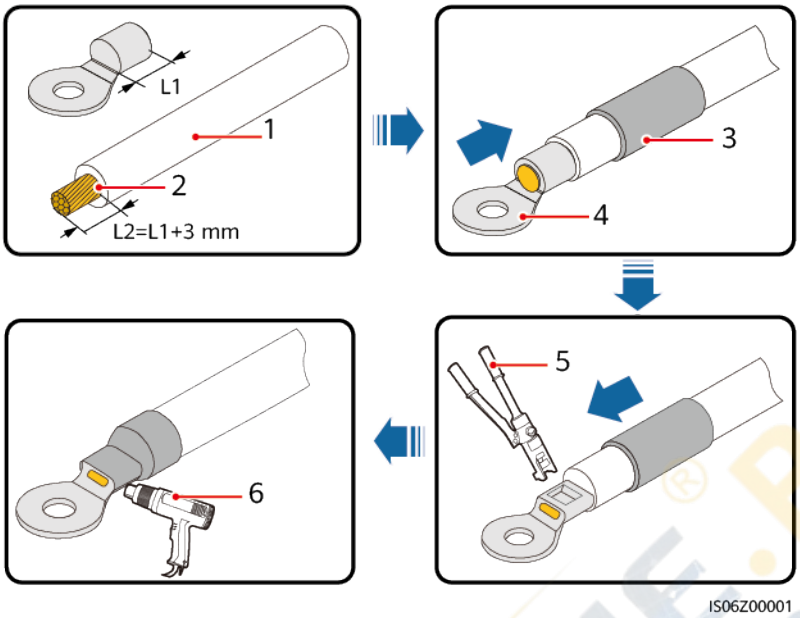

(1) Cable (2) Core (3) Heat shrink tubing
(4) OT terminal (5) Crimping tool (6) Heat gun

Step 2 Connect the PE cable.

Figure 5-3 Connecting the PE cable

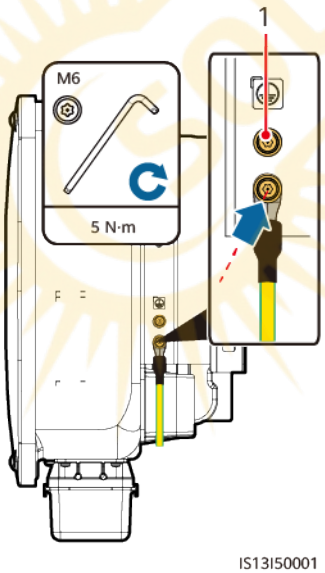

(1) Standby protection ground point

----End

5.4 Connecting the AC Output Power Cable

Precautions

An AC switch must be installed on the AC side of the SUN2000 to ensure that the SUN2000 can be safely disconnected from the power grid.

WARNING

Do not connect loads between the SUN2000 and the AC switch.

NOTICE

- If an external residual current device (RCD) is used, a device of type A should be used, with a tripping current of 300 mA or higher.
- If multiple SUN2000s connect to the general residual current device (RCD) through their respective external AC switches, the rated leakage action current of the general RCD should be greater than or equal to the number of SUN2000s multiplied by 300 mA.
- Use a socket wrench and extension rod to connect the AC power cable. The extension rod must be longer than 100 mm.
- Sufficient slack should be provided in the PE cable to ensure that the last cable bearing the force is the PE cable when the AC output power cable bears pulling force due to force majeure.
- Do not install third-party devices in the AC connection box.
- You need to prepare M8 OT terminals by yourself.

Procedure

Step 1 Remove the AC terminal box and install partition boards.

Figure 5-4 Removing the AC terminal box

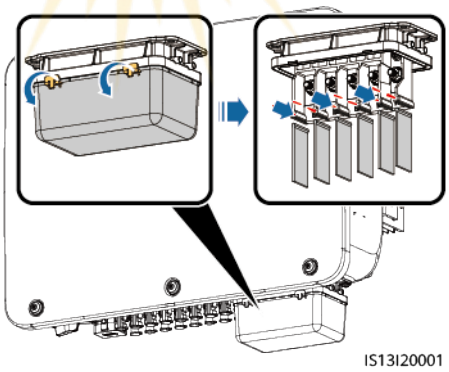

Step 2 Connect the AC output power cable (using a five-core cable as an example).

NOTE

- To avoid damaging the rubber liner, do not route a cable with a crimped OT terminal directly through it.
- It is recommended that the length of the PE cable to be stripped be 15 mm longer than the length of other cables.
- The cable colors in figures are for reference only. Select appropriate cables according to the local standards.

Figure 5-5 Stripping the AC power cable

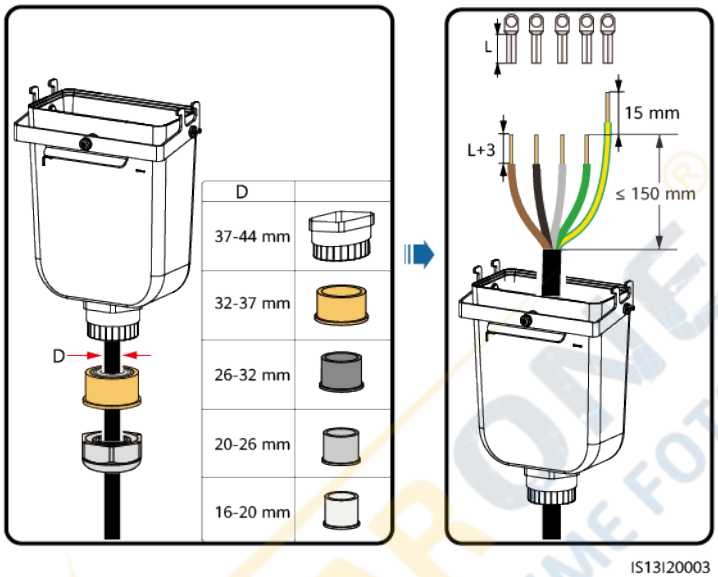

Figure 5-6 Connecting the AC power cable

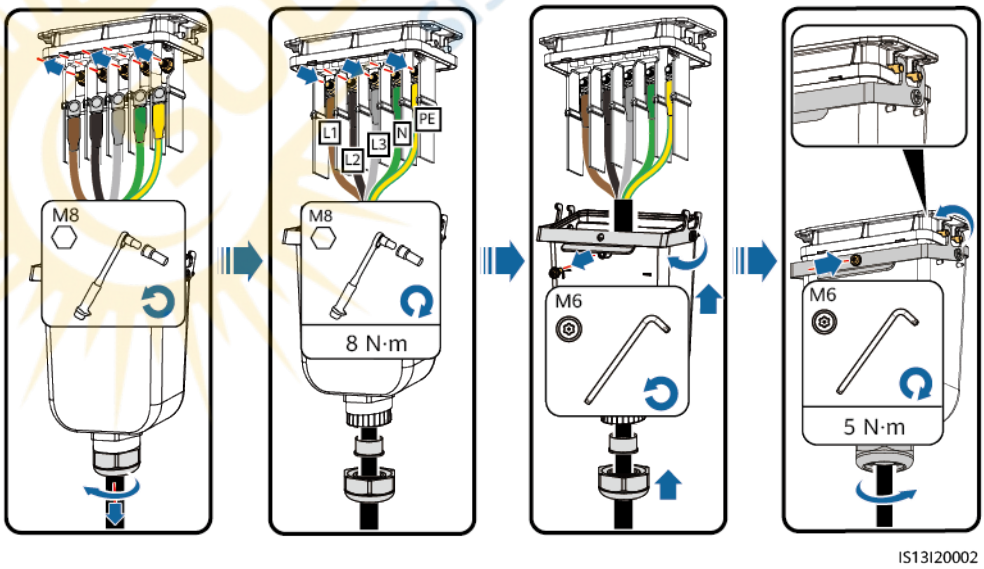

----End

5.5 Installing the DC Input Power Cable

Precautions

DANGER

- Before connecting the DC input power cables, ensure that the DC voltage is within the safe range (lower than 60 V DC) and that the DC switch on the SUN2000 is OFF. Failing to do so may result in electric shocks.
- When the SUN2000 is running, it is not allowed to work on the DC input power cables, such as connecting or disconnecting a PV string or a PV module in a PV string. Failing to do so may cause electric shocks.
- If no PV string connects to a DC input terminal of the SUN2000, do not remove the watertight cap from the DC input terminals. Otherwise, the IP rating of the SUN2000 will be affected.

WARNING

Ensure that the following conditions are met. Otherwise, the SUN2000 may be damaged, or even a fire could happen.

- PV modules connected in series in each PV string are of the same specifications.
- The DC input voltage of the SUN2000-29.9KTL/30KTL/36KTL/40KTL-M3 shall not exceed 1100 V DC under any circumstance.
- The DC input voltage of the SUN2000-20KTL-M3 shall not exceed 800 V DC under any circumstance.
- The polarities of electric connections are correct on the DC input side. The positive and negative terminals of a PV string connect to corresponding positive and negative DC input terminals of the SUN2000.
- If polarity of the DC input power cable is reversed and the DC switch is ON, do not turn off the DC switch immediately or remove positive and negative connectors. Wait until the solar irradiance declines at night and the PV string current reduces to below 0.5 A, and then turn off the DC switch and remove the positive and negative connectors. Correct the PV string polarity before reconnecting the PV string to the SUN2000.

 Copyright © Huawei Technologies Co., Ltd.

NOTICE

- The SUN2000 does not support power supplies other than PV strings. Since the output of the PV string connected to the SUN2000 cannot be grounded, ensure that the PV module output is well insulated to ground.
- During the installation of PV strings and the SUN2000, the positive or negative terminals of PV strings may be short-circuited to ground if the power cable is not properly installed or routed. In this case, an AC or DC short circuit may occur and damage the SUN2000. The caused device damage is not covered under any warranty.

Figure 5-7 DC input terminals

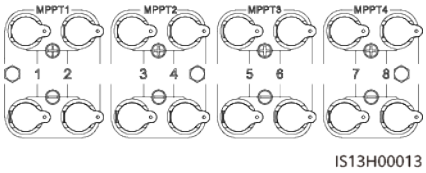

When the DC input is not fully configured, the DC input terminals must meet the following requirements:

1. Distribute the DC input power cables evenly over four MPPT circuits, and connect them preferentially through MPPT1 and MPPT4.
2. Maximize the number of connected MPPT circuits.

Number of PV Strings	Terminal Selection	Number of PV Strings	Terminal Selection
1	PV1	2	PV1 and PV7
3	PV1, PV3 and PV7	4	PV1, PV3, PV5 and PV7
5	PV1, PV2, PV3, PV5 and PV7	6	PV1, PV2, PV3, PV5, PV7 and PV8
7	PV1, PV2, PV3, PV4, PV5, PV7 and PV8	8	PV1, PV2, PV3, PV4, PV5, PV6, PV7 and PV8

Procedure

Step 1 Connect the DC power cable.

CAUTION

Use the positive and negative Staubli MC4 metal terminals and DC connectors supplied with the SUN2000. Using incompatible positive and negative metal terminals and DC connectors may result in serious consequences. The caused device damage is not covered under warranty.

NOTICE

- You are advised to use the PV-CZM-22100 (Staubli) crimping tool and do not use it with the positioning block. Otherwise, the metal terminals may be damaged.
- The PV-MS (Staubli) or PV-MS-HZ (Staubli) open-end wrench is recommended.
- Cables with high rigidity, such as armored cables, are not recommended as DC input power cables, because poor contact may be caused by the bending of the cables.
- Before assembling DC connectors, label the cable polarities correctly to ensure correct cable connections.
- After the positive and negative connectors snap into place, pull the DC input cables back to ensure that they are connected securely.
- If the SUN2000 is used with an optimizer, the number of optimizers for a single PV string cannot exceed 26.
- If the PV string is configured with an optimizer, check the cable polarity by referring to the smart PV optimizer quick guide.

Figure 5-8 Connecting the DC power cable

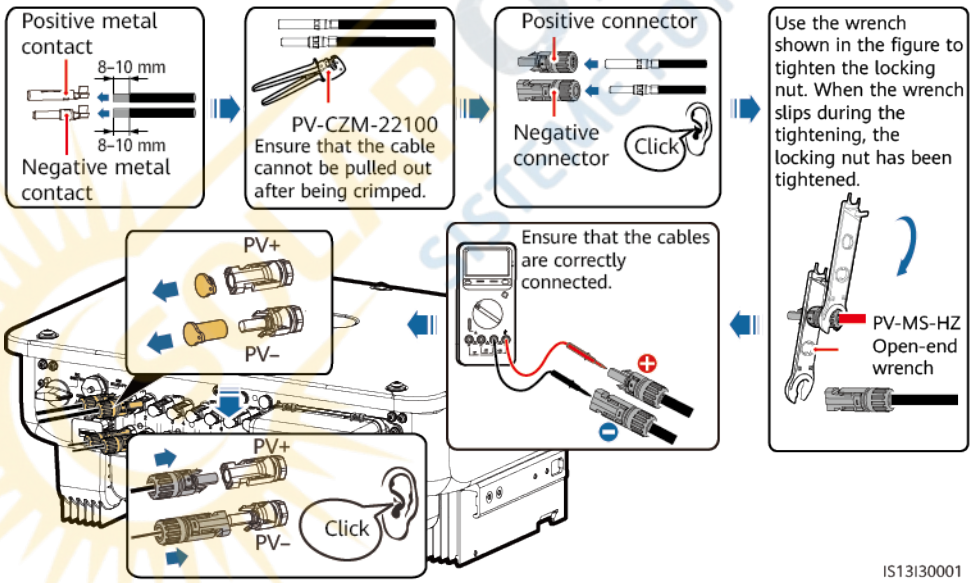

----End

5.6 (Optional) Installing the Smart Dongle

Procedure

NOTE

The Smart Dongle is not provided in standard configuration.

- 4G Smart Dongle

NOTICE

- If your Smart Dongle is not equipped with a SIM card, prepare a standard SIM card (size: 25 mm x 15 mm) with the capacity greater than or equal to 64 KB.
- When installing the SIM card, determine its installation direction based on the silk screen and arrow on the card slot.
- Press the SIM card in place to lock it, indicating that the SIM card is correctly installed.
- When removing the SIM card, push it inwards to eject it.
- When reinstalling the cover of the Smart Dongle, ensure that the buckle springs back in place.

Figure 5-9 Installing a 4G Smart Dongle

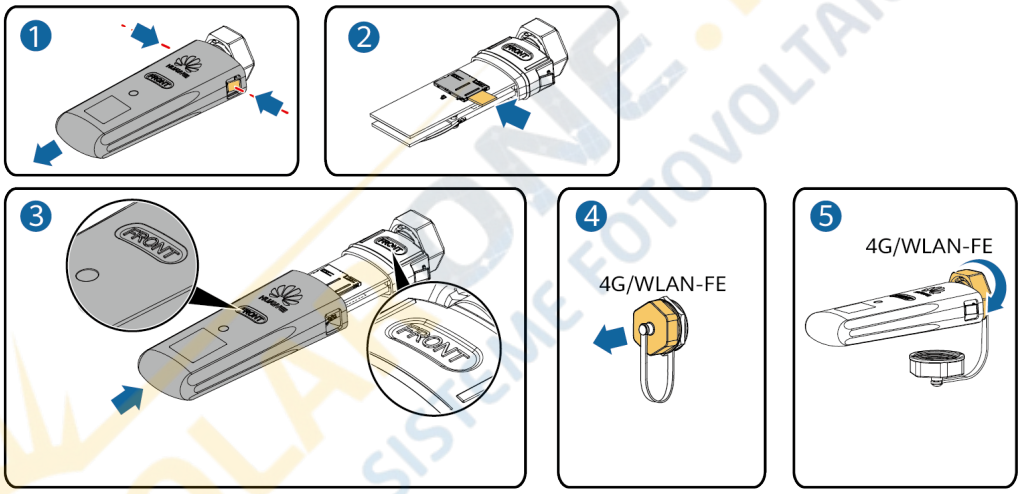

IS10H00016

- WLAN-FE Smart Dongle (WLAN Communication)

Figure 5-10 Installing a WLAN-FE Smart Dongle (WLAN communication)

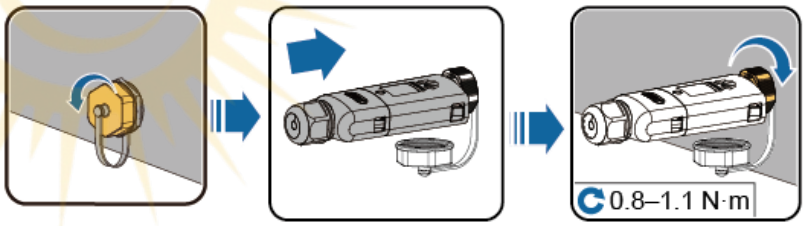

IL04H00005

- WLAN-FE Smart Dongle (FE Communication)

Copyright © Huawei Technologies Co., Ltd.

Figure 5-11 Installing a WLAN-FE Smart Dongle (FE communication)

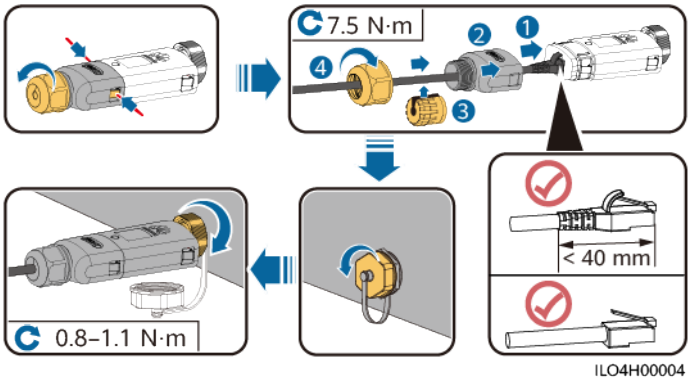

NOTICE

Install the network cable before installing the Smart Dongle on the solar inverter.

NOTE

- For details about how to operate the WLAN-FE Smart Dongle SDongleA-05, see ***SDongleA-05 Quick Guide (WLAN-FE)***. You can scan the QR code below to obtain the document.
- For details about how to operate the 4G Smart Dongle SDongleA-03, see ***SDongleA-03 Quick Guide (4G)***. You can scan the QR code below to obtain the document.

The quick guide is delivered with the Smart Dongle.

5.7 Connecting the Signal Cable

COM Port Pin Definitions

NOTICE

When laying out a signal cable, separate it from power cables to avoid strong signal interference.

Figure 5-12 Pin definitions

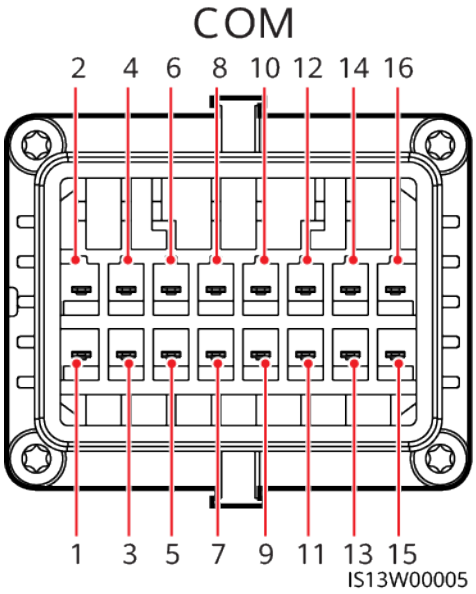

Pin	Definition	Function	Description	Pin	Definition	Function	Description
1	485A1_1	RS485 differential signal +	Used to cascade inverters or connect to the SmartLogger. It can also connect to an EMI.	2	485A1_2	RS485 differential signal +	Used to cascade inverters or connect to the SmartLogger. It can also connect to an EMI.
3	485B1_1	RS485 differential signal –		4	485B1_2	RS485 differential signal –	
5	PE	Ground point on the shield layer	-	6	PE	Ground point on the shield layer	-
7	485A2	RS485 differential signal +	Connects to the RS485 signal port for controlling the power meter at the grid-tied point.	8	DIN1	Dry contact for power grid scheduling	-
9	485B2	RS485 differential signal –		10	DIN2		
11	-	-	-	12	DIN3		
13	GND	GND	-	14	DIN4		

Pin	Definition	Function	Description	Pin	Definition	Function	Description
15	DIN5	Rapid shutdown	Supports AC NS protection shutdown, which can be used as a reserved port for rapid shutdown signals.	16	GND		

Scenarios Where No Signal Cable Is Connected

NOTICE

If no signal cable is required for the SUN2000, use waterproof plugs to block the wiring holes on the signal cable connector and connect the signal cable connector to the communications port on the SUN2000 to improve the waterproof performance of the SUN2000.

Figure 5-13 Securing the signal cable connector

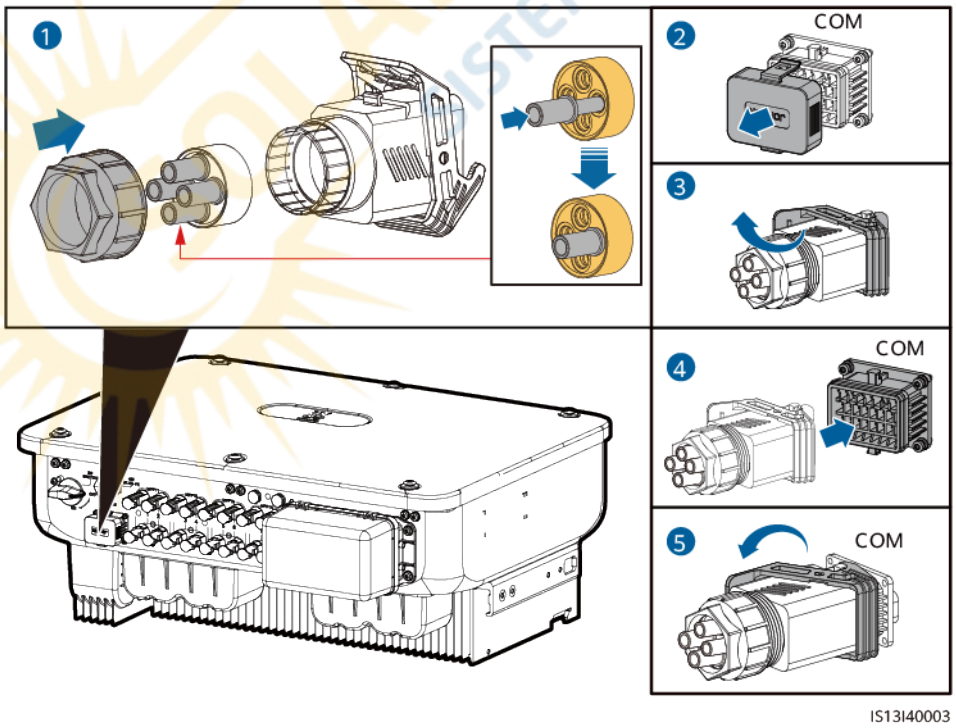

5.7.1 Communication Modes

RS485 Communication

- Smart Dongle networking

Figure 5-14 Smart Dongle networking

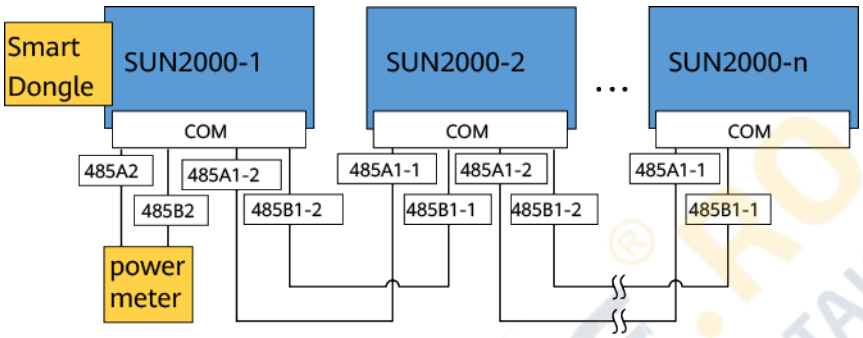

NOTE

If a SUN2000 is networked using a Smart Dongle, it cannot be connected to the SmartLogger.

- SmartLogger networking

Figure 5-15 SmartLogger networking

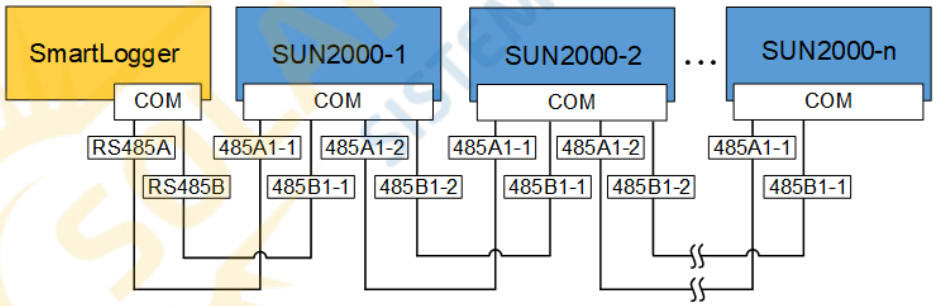

NOTE

- If a SUN2000 is networked using the SmartLogger, it cannot be connected to a Smart Dongle.
- It is recommended that the number of SUN2000s connected to each RS485 route be less than 30.

MBUS Communication

The MBUS is a communication mode in which communication signals are loaded to power cables through the communications board for transmission.

NOTE

The built-in MBUS module in the SUN2000 does not need to be connected with cables.

Figure 5-16 MBUS communication

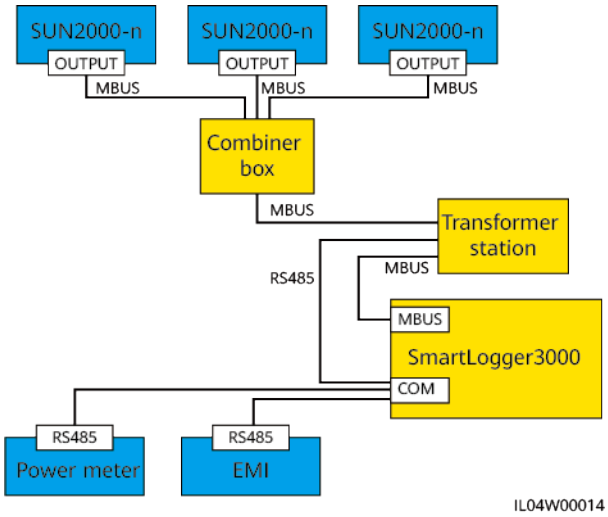

5.7.2 (Optional) Connecting the RS485 Communications Cable to the SUN2000

Procedure

Step 1 Connect the signal cable to the signal cable connector.

Figure 5-17 Connecting the cable

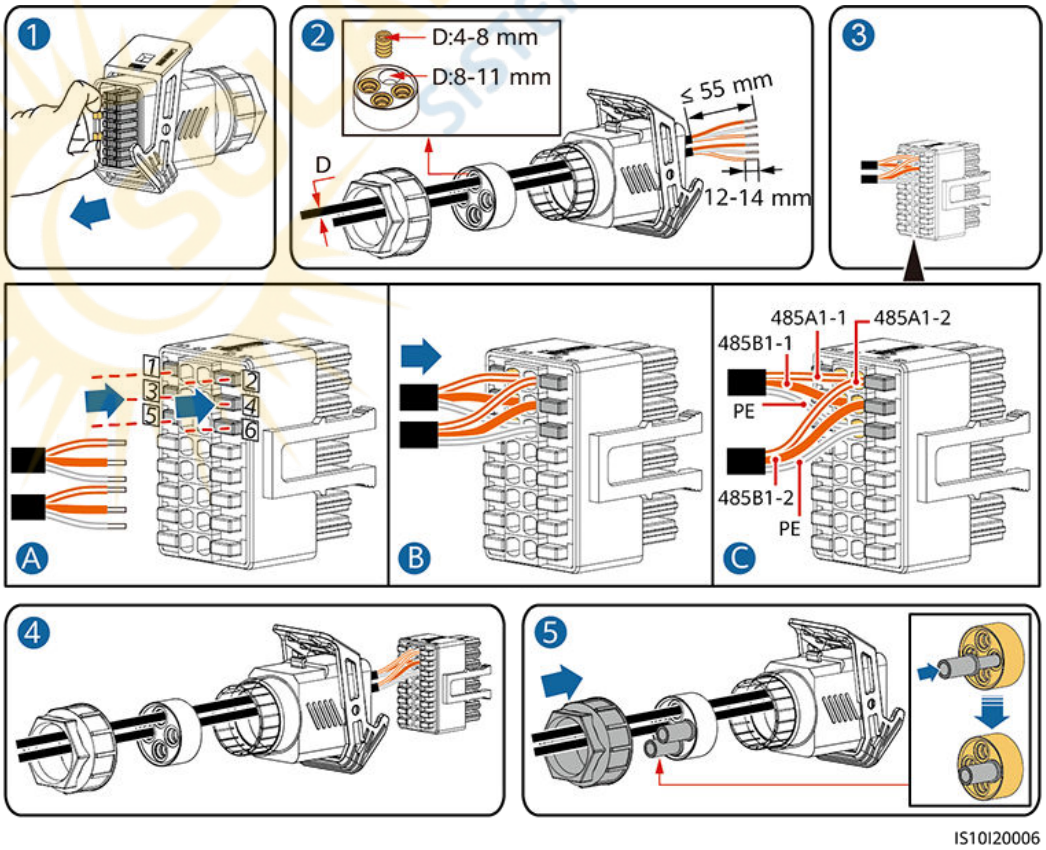

Step 2 Connect the signal cable connector to the COM port.

Figure 5-18 Securing the signal cable connector

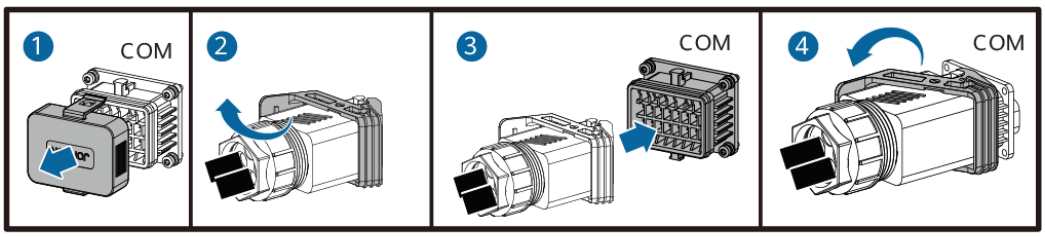

----End

5.7.3 (Optional) Connecting the RS485 Communications Cable to the Power Meter

Procedure

Step 1 Connect the signal cable to the signal cable connector.

Figure 5-19 Connecting the cable

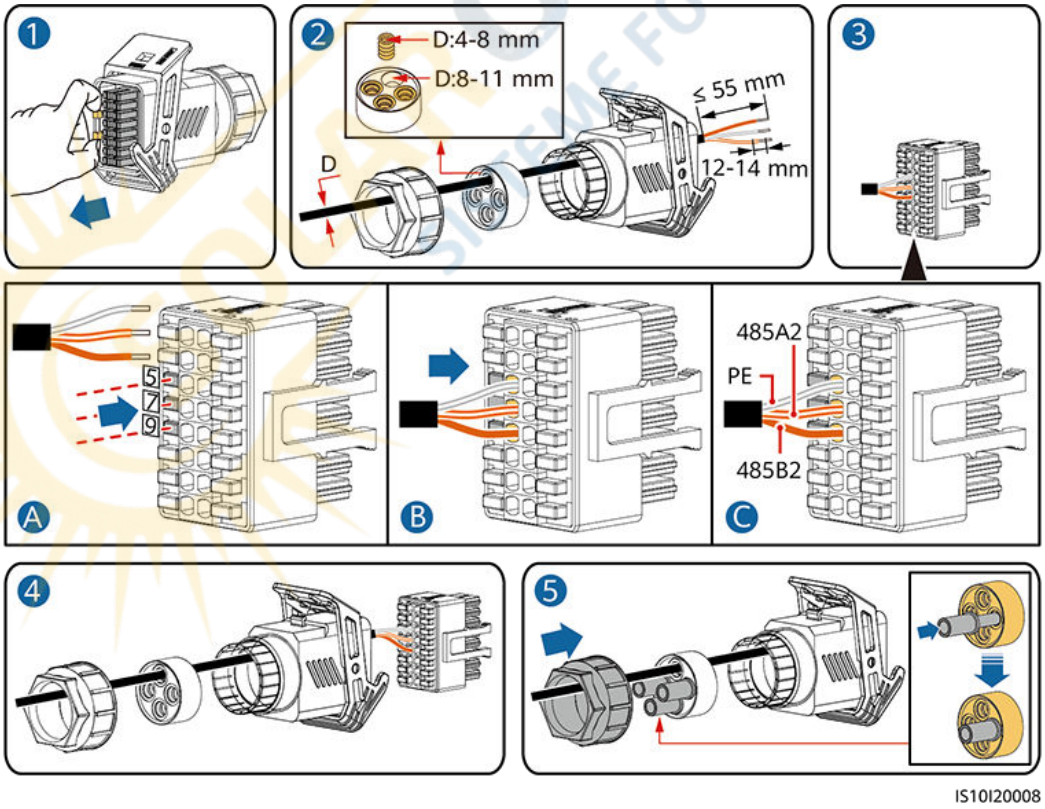

Step 2 Connect the signal cable connector to the COM port.

Figure 5-20 Securing the signal cable connector

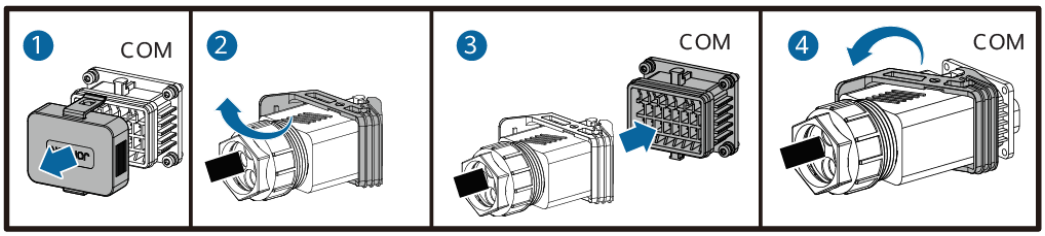

----End

5.7.4 (Optional) Connecting the Power Grid Scheduling Signal Cable

Procedure

Step 1 Connect the signal cable to the signal cable connector.

Figure 5-21 Connecting the cable

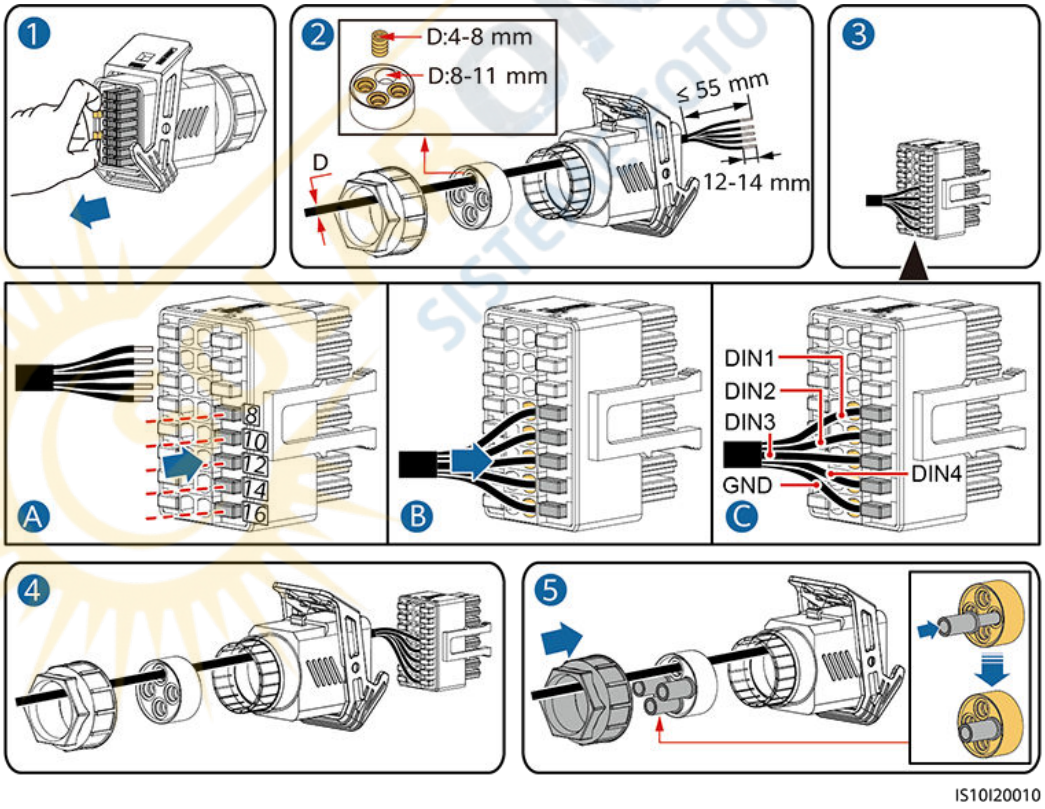

Step 2 Connect the signal cable connector to the COM port.

Copyright © Huawei Technologies Co., Ltd.

Figure 5-22 Securing the signal cable connector

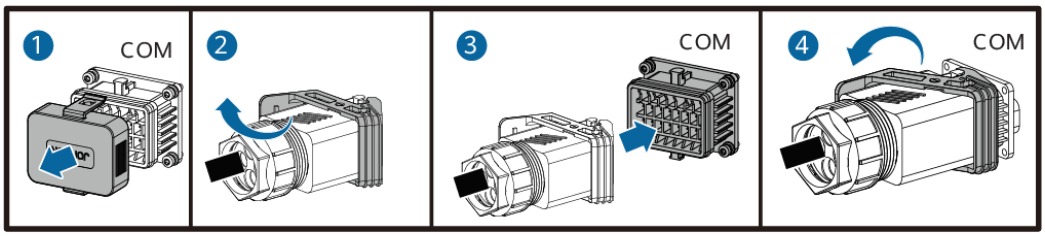

IS13I40001

----End

5.7.5 (Optional) Connecting the Rapid Shutdown Signal Cable

Step 1 Connect the signal cable to the signal cable connector.

Figure 5-23 Connecting the cable

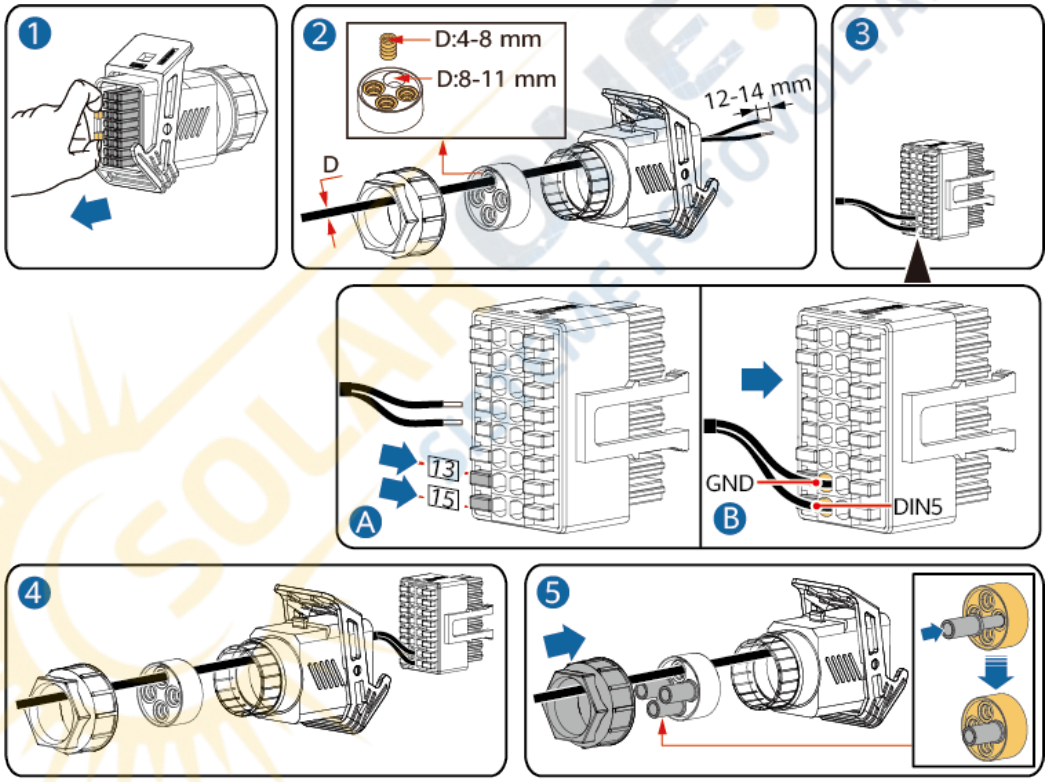

IS13I40004

Step 2 Connect the signal cable connector to the COM port.

Copyright © Huawei Technologies Co., Ltd.

Figure 5-24 Securing the signal cable connector

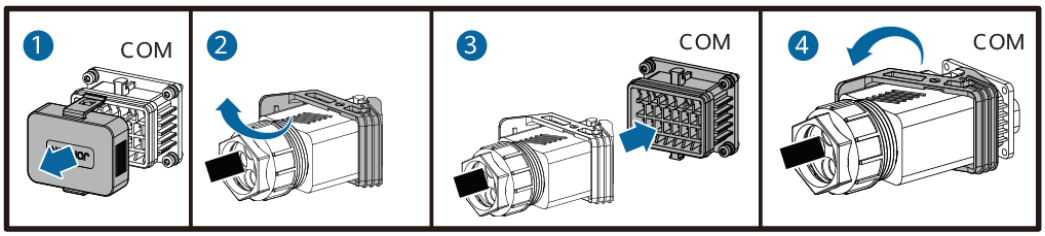

IS13I40001

----End

SOLARONE.RO® SISTEME FOTOVOLTAICE

6 Commissioning

6.1 Checking Before Power-On

Table 6-1 Checklist

No.	Check Item	Acceptance Criteria
1	SUN2000 installation	The SUN2000 is installed correctly and securely.
2	Smart Dongle	The Smart Dongle is installed correctly and securely.
3	Cable routing	The cables are routed properly as required by the customer.
4	Cable ties	Cable ties are evenly distributed and no burr exists.
5	Reliable grounding	The PE cable is connected correctly and securely.
6	Switch	DC switches and all the switches connecting to the SUN2000 are OFF.
7	Cable connection	The AC output power cable, and DC input power cables are connected correctly and securely.
8	Unused terminals and ports	Unused terminals and ports are locked by watertight caps.
9	Installation environment	The installation space is proper, and the installation environment is clean and tidy.

 Copyright © Huawei Technologies Co., Ltd.

6.2 System Power-On

Prerequisites

NOTICE

- Before turning on the AC switch between the SUN2000 and the power grid, check that the AC voltage is within the specified range using a multimeter.
- If the DC power supply is connected but the AC power supply is disconnected, the SUN2000 will report a **Grid Loss** alarm. The SUN2000 can start properly only after the power grid recovers.

Procedure

Step 1 Turn on the AC switch between the SUN2000 and the power grid.

Step 2 (Optional) Remove the locking screw beside the DC switch.

Figure 6-1 Removing the locking screw beside the DC switch

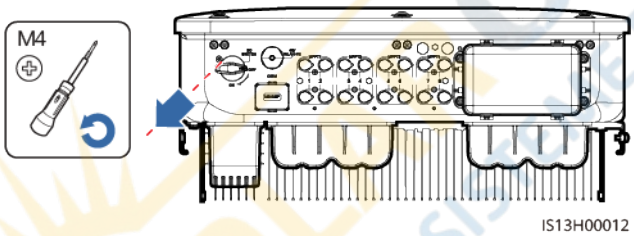

Step 3 Turn on the DC switch at the bottom of the SUN2000.

Step 4 Observe the LED indicators to check the operating status of the SUN2000.

Table 6-2 Indicator description

Category	Status		Description
Running indicator 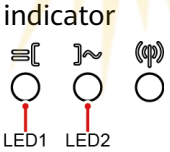	**LED1**	**LED2**	–
	Steady green	Steady green	The SUN2000 is operating in grid-tied mode.
	Blinking green slowly (on for 1s and off for 1s)	Off	The DC is on and the AC is off.

Copyright © Huawei Technologies Co., Ltd.

Category	Status		Description
	Blinking green slowly (on for 1s and off for 1s)	Blinking green slowly (on for 1s and off for 1s)	Both the DC and AC are on, and the SUN2000 is not supplying power to the power grid.
	Off	Blinking green slowly	The DC is off and the AC is on.
	Off	Off	Both the DC and AC are off.
	Blinking red fast (on for 0.2s and off for 0.2s)	–	DC environment alarm
	–	Blinking red fast (on for 0.2s and off for 0.2s)	AC environment alarm
	Steady red	Steady red	Faulty
Communications indicator 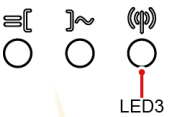	**LED3**		–
	Blinking green fast (on for 0.2s and then off for 0.2s)		Communication is in progress.
	Blinking green slowly (on for 1s and off for 1s)		A mobile phone is connected.
	Off		No communication
Note: If LED1, LED2, and LED3 are steady red, the SUN2000 is faulty and needs to be replaced.			

----End

7 Man-Machine Interaction

NOTE

- If the SUN2000 is connected to the FusionSolar Smart PV Management System, the FusionSolar app is recommended. In areas (such as the UK) where the FusionSolar app is not available, or when a third-party management system is used, only the SUN2000 app can be used for commissioning.
- Access the Huawei app store (http://appstore.huawei.com), search for FusionSolar or SUN2000, and download the app installation package. You can also scan the QR codes below to download the apps.

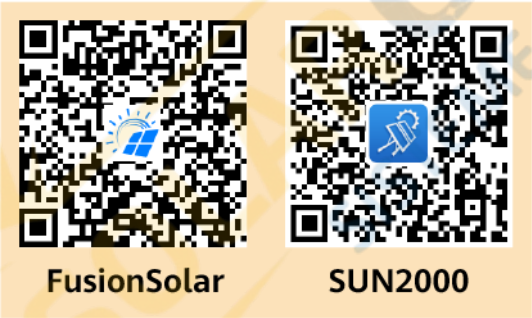

NOTICE

- The screenshots are for reference only. The actual screens may vary.
- Obtain the initial password for connecting to the solar inverter WLAN from the label on the side of the solar inverter.
- Set the password at the first login. To ensure account security, change the password periodically and keep the new password in mind. Not changing the password may cause password disclosure. A password left unchanged for a long period of time may be stolen or cracked. If a password is lost, devices cannot be accessed. In these cases, the user is liable for any loss caused to the PV plant.
- Set the correct grid code based on the application area and scenario of the SUN2000.

 Copyright © Huawei Technologies Co., Ltd.

7.1 Scenario in Which SUN2000s Are Connected to the FusionSolar Smart PV Management System

7.1.1 (Optional) Registering an Installer Account

NOTE

- If you have an installer account, skip this step.
- You can register an account only using a mobile phone only in China.
- The mobile number or email address used for registration is the user name for logging in to the FusionSolar app.

Create the first installer account and create a domain named after the company name.

Figure 7-1 Creating the first installer account

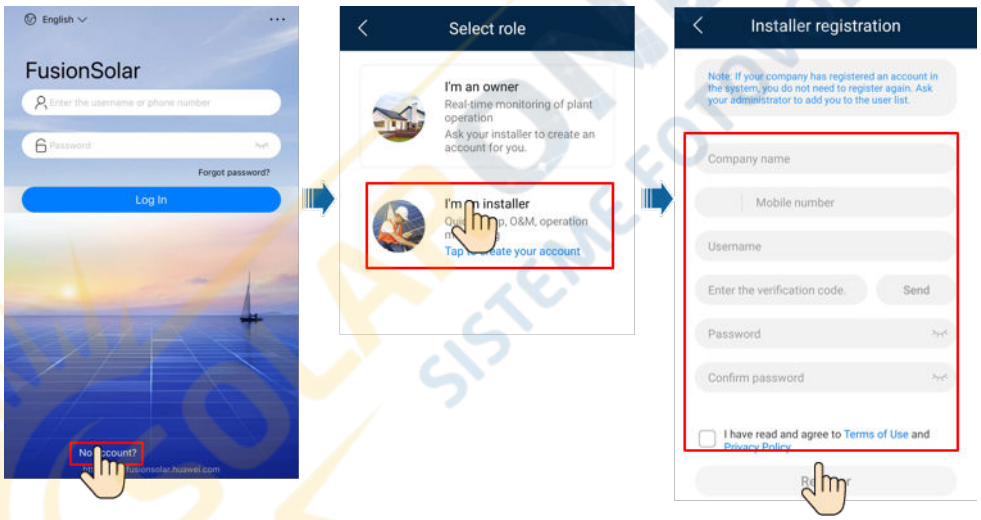

NOTICE

To create multiple installer accounts for a company, log in to the FusionSolar app and tap **Add User** to create an installer account.

Copyright © Huawei Technologies Co., Ltd.

Figure 7-2 Creating multiple installer accounts for the same company

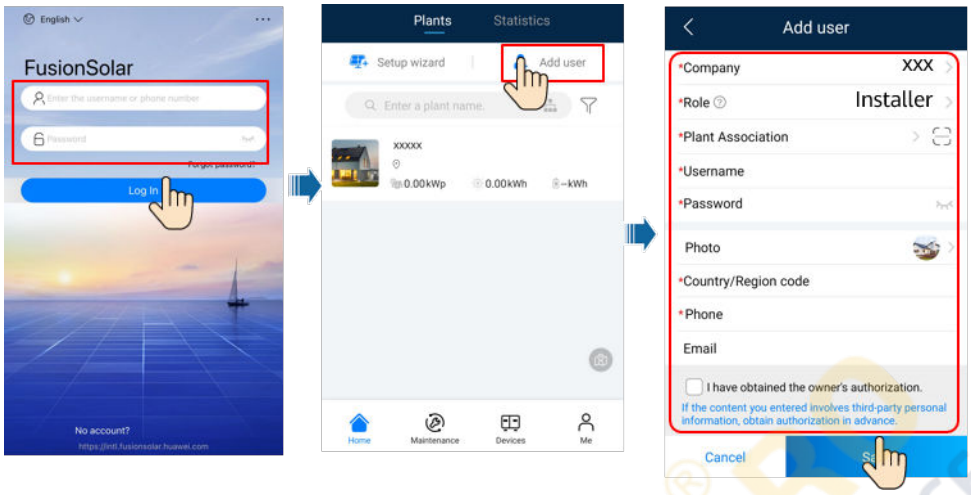

7.1.2 Creating a PV Plant and a User

Figure 7-3 Creating a PV plant and a user

NOTE

For details about how to use the site deployment wizard, see ***FusionSolar App Quick Guide***. During the FusionSolar app upgrade, scan the QR code to download the corresponding quick guide according to the downloaded app version.

7.1.3 (Optional) Setting the Physical Layout of the Smart PV Optimizers

NOTE

- If smart PV optimizers are configured for PV strings, ensure that the smart PV optimizers have been successfully connected to the SUN2000 before performing the operations in this section.
- Check that the SN labels of smart PV optimizers are correctly attached to the physical layout template.
- Take and save a photo of the physical layout template. Keep your phone parallel to the template and take a photo in landscape mode. Ensure that the four positioning points in the corners are in the frame. Ensure that each QR code is attached within the frame.
- For details about the physical layout of smart PV optimizers, see ***FusionSolar App Quick Guide***. During the FusionSolar app upgrade, scan the QR code to download the corresponding quick guide according to the downloaded app version.

Scenario 1: Setting on the FusionSolar Server Side (Solar Inverter Connected to the Management System)

Step 1 Log in to the FusionSolar app and tap the plant name on the **Home** screen to access the plant screen. Select **Layout**, tap , and upload the physical layout template photo as prompted.

Figure 7-4 Uploading the physical layout template photo (App)

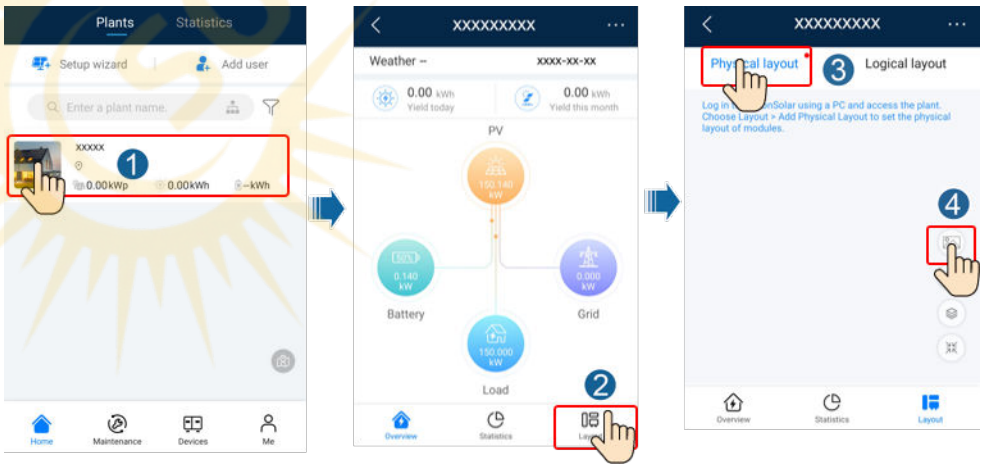

NOTE

You can also upload the physical layout template photo on the WebUI as follows: Log in to https://intl.fusionsolar.huawei.com to access the WebUI of the FusionSolar Smart PV Management System. On the **Home** page, click the plant name to go to the plant page. Choose **Layout**, click **Click to Upload**, and upload the physical layout template photo.

Figure 7-5 Uploading the physical layout template photo (WebUI)

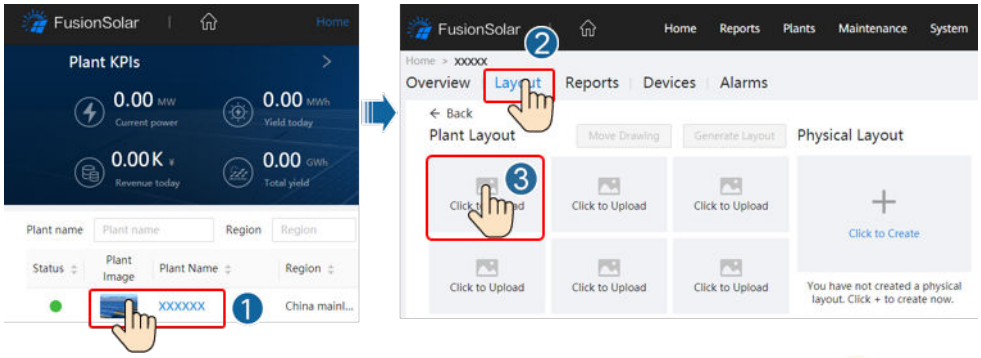

Step 2 Log in to https://intl.fusionsolar.huawei.com to access the WebUI of the FusionSolar Smart PV Management System. On the **Home** page, click the plant name to go to the plant page. Select **Layout**. Choose **Generate layout**, and create a physical layout as prompted. You can also manually create a physical location layout.

Figure 7-6 Physical layout design of PV modules

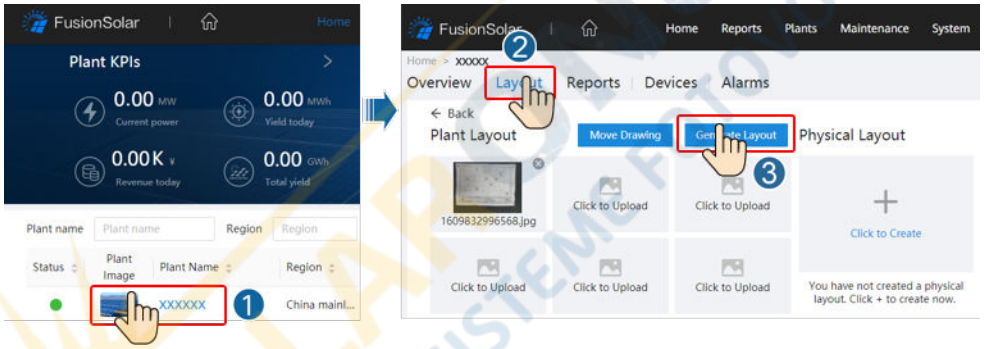

----End

Scenario 2: Setting on the Solar Inverter Side (Solar Inverter Not Connected to the Management System)

Step 1 Access the **Device Commissioning** screen on the FusionSolar app to set the physical layout of Smart PV Optimizers.

1. Log in to the FusionSolar app. On the **Device Commissioning** screen, choose **Maintenance** > **Optimizer layout**. The **Optimizer layout** screen is displayed.
2. Tap the blank area. The **Identify image** and **Add PV modules** buttons are displayed. You can use either of the following methods to perform operations as prompted:
   - Method 1: Tap **Identify image** and upload the physical layout template photo to complete the optimizer layout. (The optimizers that fail to be identified need to be manually bound.)
   - Method 2: Tap **Add PV modules** to manually add PV modules and bind the optimizers to the PV modules.

Figure 7-7 Physical layout design of PV modules

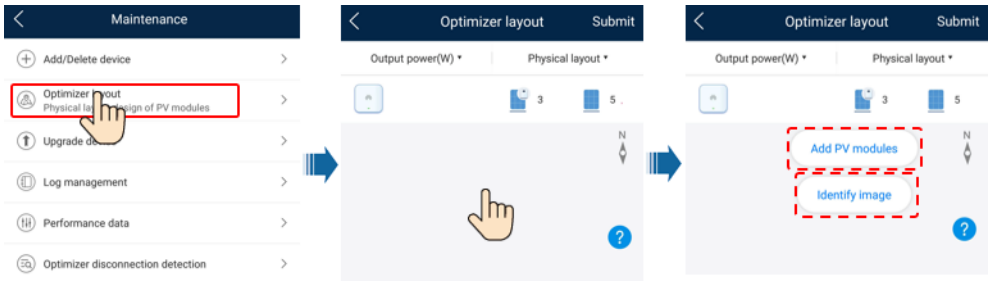

----End

7.1.4 Detect optimizer disconnection

Log in to the FusionSolar app, choose **Device Commissioning** > **Maintenance** > **Optimizer disconnection detection**, tap the detection button to detect the optimizer disconnection, and rectify the fault based on the detection result.

Figure 7-8 Detect optimizer disconnection

7.1.5 SmartLogger Networking Scenario

For details, see ***PV Plants Connecting to Huawei Hosting Cloud Quick Guide (Inverters + SmartLogger3000)***, ***PV Plants Connecting to SmartPVMS Quick Guide (Inverters + SmartLogger3000 + RS485 Networking)*** and ***PV Plants Connecting to SmartPVMS Quick Guide (Inverters + SmartLogger3000 + MBUS Networking)***.

7.2 Scenario in Which SUN2000s Are Connected to Other Management Systems

Step 1 Open the SUN2000 app, scan the QR code of the SUN2000 or manually connect to the WLAN hotspot to access the device commissioning screen.

Step 2 Select **installer** and enter the login password.

Step 3 Tap **Log in** to access the quick settings screen or SUN2000 home screen.

Figure 7-9 Logging In to the app

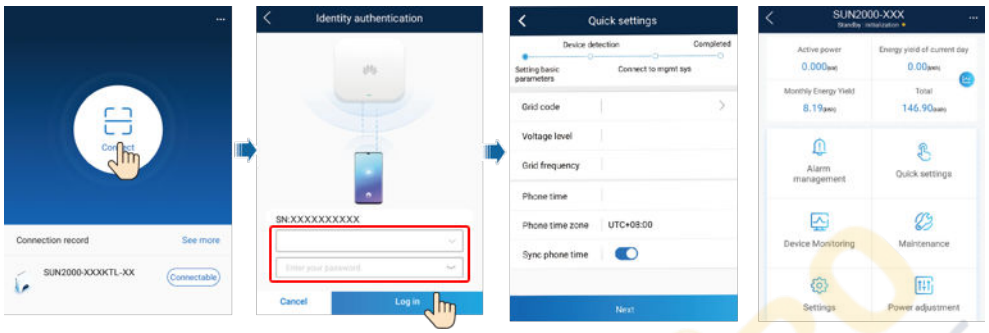

----End

SOLARONE.RO SISTEME FOTOVOLTAICE

8 Maintenance

8.1 System Power-Off

Precautions

WARNING

After the SUN2000 powers off, the remaining electricity and heat may still cause electric shocks and body burns. Therefore, put on protective gloves and begin operating the SUN2000 five minutes after the power-off.

Procedure

Step 1 Send a shutdown command on the app.

Step 2 Turn off the AC switch between the SUN2000 and the power grid.

Step 3 Turn off the DC switch at the bottom of the SUN2000.

Step 4 (Optional) Install the locking screw for the DC switch.

Figure 8-1 Installing the locking screw for the DC switch

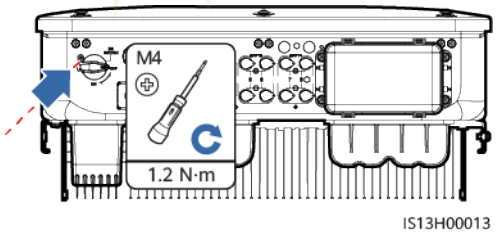

Step 5 Turn on the DC switch between the PV string and the SUN2000 if there is any.

----End

8.2 Routine Maintenance

To ensure that the SUN2000 can operate properly for a long term, you are advised to perform routine maintenance on it as described in this chapter.

CAUTION

Before cleaning the system, connecting cables, and ensuring the grounding reliability, power off the system.

Table 8-1 Maintenance checklist

Check Item	Check Method	Maintenance Interval
System cleanliness	Check periodically that the heat sinks are free from obstacles and dust.	Once every 6 to 12 months
System operating status	• Check that the SUN2000 is not damaged or deformed. • Check that the SUN2000 operates with no abnormal sound. • Check that all SUN2000 parameters are correctly set during operation.	Once every 6 months
Electrical connection	• Check that cables are secured. • Check that cables are intact, and that in particular, the parts touching the metallic surface are not scratched.	The first inspection is 6 months after the initial commissioning. From then on, the interval can be 6 to 12 months.
Grounding reliability	Check that ground cables are securely connected.	The first inspection is 6 months after the initial commissioning. From then on, the interval can be 6 to 12 months.
Air tightness	Check that all terminals and ports are properly sealed.	Once a year

8.3 Troubleshooting

Alarm severities are defined as follows:

 Copyright © Huawei Technologies Co., Ltd.

- Major: The inverter is faulty. As a result, the output power decreases or the grid-tied power generation is stopped.
- Minor: Some components are faulty without affecting the grid-tied power generation.
- Warning: The inverter works properly. The output power decreases or some authorization functions fail due to external factors.

Table 8-2 Common fault alarm list

ID	Name	Severity	Cause	Solution
2001	High string input voltage	Major	The PV array is not properly configured. Excessive PV modules are connected in series to the PV string, and therefore the PV string open-circuit voltage exceeds the maximum inverter operating voltage. ● Cause ID 1: PV strings 1 and 2 ● Cause ID 2: PV strings 3 and 4 ● Cause ID 3: PV strings 5 and 6 ● Cause ID 4: PV strings 7 and 8	Reduce the number of PV modules connected in series to the PV string until the PV string open-circuit voltage is less than or equal to the maximum inverter operating voltage. After the PV string configuration is corrected, the alarm disappears.
2002	DC arc fault	Major	The PV string power cables arc or are in poor contact. ● Cause ID 1: PV strings 1 and 2 ● Cause ID 2: PV strings 3 and 4 ● Cause ID 3: PV strings 5 and 6 ● Cause ID 4: PV strings 7 and 8	Check whether the PV string cables arc or are in poor contact.
2003	DC arc fault	Major	The PV string power cables arc or are in poor contact. Cause ID 1–8: PV strings 1–8	Check whether the PV string cables arc or are in poor contact.

 Copyright © Huawei Technologies Co., Ltd.

ID	Name	Severity	Cause	Solution
2011	String reverse connection	Major	The PV string polarity is reversed. Cause ID 1–8: PV strings 1–8	Check whether the PV string is reversely connected to the inverter. If yes, wait until the solar irradiance declines at night and the PV string current drops to below 0.5 A. Then, turn off the DC switch and correct the PV string connection.
2012	String current backfeed	Warning	The number of PV modules connected in series to the PV string is insufficient. As a result, the terminal voltage is lower than that of other strings. Cause ID 1–8: PV strings 1–8	1. Check whether the number of PV modules connected in series to the PV string is less than that of other PV strings. If yes, wait until the PV string current drops below 0.5 A, turn off all DC switches, and adjust the number of PV modules in the PV string. 2. Check whether the open-circuit voltage of the PV string is abnormal. 3. Check whether the PV string is shaded.
2021	AFCI self-check failure	Major	Cause ID = 1, 2 The AFCI self-check fails.	Turn off the AC output switch and DC input switch, and then turn them on after 5 minutes. If the alarm persists, contact Huawei technical support.
2031	Phase wire short-circuited to PE	Major	Cause ID = 1 The impedance of the output phase wire to PE is low or the output phase wire is short-circuited to PE.	Check the impedance of the output phase wire to PE, locate the position with low impedance, and rectify the fault.
2032	Grid loss	Major	Cause ID = 1 ● Power grid outage occurs. ● The AC circuit is disconnected or the AC switch is off.	1. The alarm is cleared automatically after the power grid recovers. 2. Check whether the AC circuit is disconnected or the AC switch is off.

 Copyright © Huawei Technologies Co., Ltd.

ID	Name	Severity	Cause	Solution
2033	Grid undervoltage	Major	Cause ID = 1 The power grid voltage is below the lower threshold or the low-voltage duration has lasted for more than the value specified by LVRT.	1. If the alarm occurs occasionally, the power grid may be abnormal temporarily. The inverter automatically recovers after detecting that the power grid becomes normal. 2. If the alarm persists, check whether the power grid voltage is within the acceptable range. If not, contact the local power operator. If yes, modify the grid undervoltage protection threshold through the app, SmartLogger, or NMS with the consent of the local power operator. 3. If the alarm persists for a long time, check the AC circuit breaker and AC output power cable.
2034	Grid overvoltage	Major	Cause ID = 1 The power grid voltage exceeds the upper threshold or the high voltage duration has lasted for more than the value specified by HVRT.	1. If the alarm occurs occasionally, the power grid may be abnormal temporarily. The inverter automatically recovers after detecting that the power grid becomes normal. 2. If the alarm persists, check whether the power grid frequency is within the acceptable range. If not, contact the local power operator. If yes, modify the grid overfrequency protection threshold through the app, SmartLogger, or NMS with the consent of the local power operator. 3. Check whether the peak voltage of the power grid is too high. If the alarm persists and lasts for a long time, contact the local power operator.

 Copyright © Huawei Technologies Co., Ltd.

ID	Name	Severity	Cause	Solution
2035	Grid volt. Imbalance	Major	Cause ID = 1 The difference between power grid phase voltages exceeds the upper threshold.	1. If the alarm occurs occasionally, the power grid may be abnormal temporarily. The inverter automatically recovers after detecting that the power grid becomes normal. 2. If the alarm persists, check whether the power grid voltage is within the acceptable range. If not, contact the local power operator. 3. If the alarm lasts for a long time, check the AC output power cable connection. 4. If the AC output power cable is correctly connected, yet the alarm persists and affects the energy yield of the PV plant, contact the local power operator.
2036	Grid overfrequency	Major	Cause ID = 1 Power grid exception: The actual power grid frequency is higher than the requirements for the local power grid code.	1. If the alarm occurs occasionally, the power grid may be abnormal temporarily. The inverter automatically recovers after detecting that the power grid becomes normal. 2. If the alarm persists, check whether the power grid frequency is within the acceptable range. If not, contact the local power operator. If yes, modify the grid overfrequency protection threshold through the app, SmartLogger, or NMS with the consent of the local power operator.

 Copyright © Huawei Technologies Co., Ltd.

ID	Name	Severity	Cause	Solution
2037	Grid underfrequency	Major	Cause ID = 1 Power grid exception: The actual power grid frequency is lower than the requirements for the local power grid code.	1. If the alarm occurs occasionally, the power grid may be abnormal temporarily. The inverter automatically recovers after detecting that the power grid becomes normal. 2. If the alarm persists, check whether the power grid frequency is within the acceptable range. If not, contact the local power operator. If yes, modify the grid underfrequency protection threshold through the app, SmartLogger, or NMS with the consent of the local power operator.
2038	Unstable grid frequency	Major	Cause ID = 1 Power grid exception: The actual change rate of the power grid frequency does not meet the requirements for the local power grid code.	1. If the alarm occurs occasionally, the power grid may be abnormal temporarily. The inverter automatically recovers after detecting that the power grid becomes normal. 2. If the alarm persists, check whether the power grid frequency is within the acceptable range. If not, contact the local power operator.
2039	Output overcurrent	Major	Cause ID = 1 The power grid voltage drops dramatically or the power grid is short-circuited. As a result, the inverter transient output current exceeds the upper threshold, and protection is triggered.	1. The inverter monitors its external operating conditions in real time and automatically recovers after the fault is rectified. 2. If the alarm persists and affects the energy yield of the PV plant, check whether the output is short-circuited. If the fault cannot be rectified, contact your dealer or Huawei technical support.

 Copyright © Huawei Technologies Co., Ltd.

ID	Name	Severity	Cause	Solution
2040	Output DC component overhigh	Major	Cause ID = 1 The DC component of the inverter output current exceeds the upper threshold.	1. The inverter monitors its external operating conditions in real time and automatically recovers after the fault is rectified. 2. If the alarm persists and affects the energy yield of the PV plant, contact your dealer or Huawei technical support.
2051	Abnormal residual current	Major	Cause ID = 1 The insulation impedance of the input side to PE decreases when the inverter is operating.	1. If the alarm occurs accidentally, the external power cable may be abnormal temporarily. The inverter automatically recovers after the fault is rectified. 2. If the alarm persists or lasts a long time, check whether the impedance between the PV string and ground is too low.
2061	Abnormal grounding	Major	Cause ID = 1 ● The neutral wire or PE cable of the inverter is not connected. ● The output mode set for the inverter is inconsistent with the cable connection mode.	Power off the inverter (turn off the AC output switch and DC input switch, and wait for a period of time. For details about the wait time, see the description on the device safety warning label), and then perform the following operations: 1. Check whether the PE cable for the inverter is connected properly. 2. If the inverter is connected to a TN power grid, check whether the neutral wire is properly connected and whether the voltage of the neutral wire to ground is normal. 3. After the inverter is powered on, check whether the output mode set for the inverter is consistent with the output cable connection mode.

 Copyright © Huawei Technologies Co., Ltd.

ID	Name	Severity	Cause	Solution
2062	Low insulation resistance	Major	Cause ID = 1 • The PV array is short-circuited with PE. • The PV string has been in a moist environment for a long time and the circuit is not well insulated to ground.	1. Check the impedance between the PV string and the PE cable. If a short circuit occurs, rectify the fault. 2. Check whether the PE cable of the inverter is correctly connected. 3. If you have confirmed that the impedance is lower than the specified protection threshold in a cloudy or rainy environment, log in to the app, SmartLogger, or NMS and set **Insulation resistance protection threshold**. For details about how to query the low insulation resistance alarm, see **HUAWEI SUN2000-29.9-40KTL-M3 Inverter Low Insulation Resistance Fault Indication Guide**.
2063	Cabinet overtemperature	Minor	Cause ID = 1 • The inverter is installed in a place with poor ventilation. • The ambient temperature exceeds the upper threshold. • The inverter is not operating properly.	1. Check the ventilation and ambient temperature at the inverter installation position. 2. If the ventilation is poor or the ambient temperature exceeds the upper threshold, improve the ventilation and heat dissipation. 3. If both the ventilation and ambient temperature meet requirements yet the alarm persists, contact your dealer or Huawei technical support.
2064	Device fault	Major	Cause ID = 1–15 An unrecoverable fault occurs on a circuit inside the inverter.	Turn off the AC output switch and DC input switch, and then turn them on after 5 minutes. If the alarm persists, contact your dealer or Huawei technical support. **NOTICE** Cause ID = 1: Perform the preceding operations when the PV string current is less than 1 A.

 Copyright © Huawei Technologies Co., Ltd.

ID	Name	Severity	Cause	Solution
2065	Upgrade failed or version mismatch	Minor	Cause ID = 1–6 The upgrade is not completed normally.	1. Perform an upgrade again. 2. If the upgrade fails several times, contact your dealer or Huawei technical support.
2066	License expired	Warning	Cause ID = 1 ● The privilege license has entered the grace period. ● The privilege feature is about to expire.	1. Apply for a new license. 2. Load a new certificate.
2067	Faulty power collector	Major	Cause ID = 1 The power meter is disconnected.	1. Check whether the configured power meter model is the same as the actual model. 2. Check whether the communications parameters of the power meter are the same as the RS485 configurations of the inverter. 3. Check whether the power meter is powered on and whether the RS485 communications cable is connected.
61440	Faulty monitoring unit	Minor	Cause ID = 1 ● The flash memory is insufficient. ● The flash memory has bad sectors.	Turn off the AC output switch and DC input switch, and then turn them on after 5 minutes. If the alarm persists, replace the monitoring board or contact your dealer or Huawei technical support.

 Copyright © Huawei Technologies Co., Ltd.

ID	Name	Severity	Cause	Solution
2072	Transient AC overvoltage	Major	Cause ID = 1 The inverter detects that the phase voltage exceeds the transient AC overvoltage protection threshold.	1. If the voltage at the grid connection point is too high, contact the local power operator. 2. If you have confirmed that the voltage at the grid connection point exceeds the upper threshold and obtained consent from the local power operator, modify the overvoltage protection thresholds. 3. Check whether the peak grid voltage exceeds the upper threshold.
2085	Built-in PID operation abnormal	Minor	Cause ID = 1, 2 ● The output resistance of PV arrays to ground is low. ● The system insulation resistance is low.	● Cause ID = 1 1. Turn off the AC output switch and DC input switch, wait for a period of time (for details about the wait time, see the description on the device safety warning label), and then turn on the DC input switch and AC output switch. 2. If the alarm persists, contact your dealer or Huawei technical support. ● Cause ID = 2 1. Check the impedance between the PV array output and the ground. If a short circuit occurs or the insulation is insufficient, rectify the fault. 2. If the alarm persists, contact your dealer or Huawei technical support.

 Copyright © Huawei Technologies Co., Ltd.

ID	Name	Severity	Cause	Solution
2090	Abnormal active power scheduling instruction	Major	Cause ID = 1 ● The DI input is abnormal. ● The DI input is inconsistent with the configuration.	1. Check whether the cables are connected correctly to the DI ports. 2. On the **DI active scheduling** screen under the dry contact scheduling settings, view the DI signal configuration mapping table. Contact the power grid company to check whether the configurations in the mapping table are complete and meet the requirements.
2091	Abnormal reactive power scheduling instruction	Major	Cause ID = 1 ● The DI input is abnormal. ● The DI input is inconsistent with the configuration.	1. Check whether the cables are connected correctly to the DI ports. 2. On the **DI reactive power scheduling** screen under the dry contact scheduling settings, view the DI signal configuration mapping table. Contact the power grid company to check whether the configurations in the mapping table are complete and meet the requirements.

NOTE

Contact your dealer or Huawei technical support if all troubleshooting procedures listed above are completed and the fault still exists.

 Copyright © Huawei Technologies Co., Ltd.

9 Handling the Inverter

9.1 Removing the SUN2000

NOTICE

Before removing the SUN2000, disconnect both AC and DC connections.

Perform the following operations to remove the SUN2000:

1. Disconnect all cables from the SUN2000, including RS485 communications cables, DC input power cables, AC output power cables, and PGND cables.
2. Remove the SUN2000 from the mounting bracket.
3. Remove the mounting bracket.

9.2 Packing the SUN2000

- If the original packing materials are available, put the SUN2000 inside them and then seal them by using adhesive tape.
- If the original packing materials are not available, put the SUN2000 inside a suitable cardboard box and seal it properly.

9.3 Disposing of the SUN2000

If the SUN2000 service life expires, dispose of it according to the local disposal rules for electrical equipment waste.

 Copyright © Huawei Technologies Co., Ltd.

10 Technical Specifications

Efficiency

Technical Specifications	SUN2000-20KTL-M3	SUN2000-29.9KTL-M3	SUN2000-30KTL-M3	SUN2000-36KTL-M3	SUN2000-40KTL-M3
Peak efficiency	97.1%	98.65%/400 Vac 98.75%/480 Vac	98.65%/400 Vac 98.75%/480 Vac	98.65%/400 Vac 98.75%/480 Vac	98.65%/400 Vac 98.75%/480 Vac
European efficiency	96.7%	98.4%/400 Vac 98.45%/480 Vac	98.4%/400 Vac 98.45%/480 Vac	98.4%/400 Vac 98.5%/480 Vac	98.4%/400 Vac 98.5%/480 Vac

Input

Technical Specifications	SUN2000-20KTL-M3	SUN2000-29.9KTL-M3	SUN2000-30KTL-M3	SUN2000-36KTL-M3	SUN2000-40KTL-M3
Recommended maximum DC input power	30,000 W	44,850 W	45,000 W	54,000 W	60,000 W
Maximum input voltage[a]	800 V	1100 V			
Maximum input current (per MPPT)	26 A				
Maximum short-circuit current (per MPPT)	40 A				

 Copyright © Huawei Technologies Co., Ltd.

Technical Specifications	SUN2000-20KTL-M3	SUN2000-29.9KTL-M3	SUN2000-30KTL-M3	SUN2000-36KTL-M3	SUN2000-40KTL-M3
Minimum startup voltage	200 V				
MPP voltage range	200–750 V	200–1000 V			
Full power MPPT voltage range	300–550 V	500–800 V/400 Vac 625–850 V/480 Vac	500–800 Vdc/(380 Vac, 400 Vac) 625–850 Vdc/440 Vac 625–850 Vdc/480 Vac	520–800 Vdc/(380 Vac, 400 Vac) 625–850 Vdc/440 Vac 625–850 Vdc/480 Vac	540–800 Vdc/(380 Vac, 400 Vac) 625–850 Vdc/440 Vac 625–850 Vdc/480 Vac
Rated input voltage	350 V	600 V (400 Vac) 720 V (480 Vac)	600 V (380 Vac, 400 Vac) 650 V (440 Vac) 720 V (480 Vac)	600 V (380 Vac, 400 Vac) 650 V (440 Vac) 720 V (480 Vac)	600 V (380 Vac, 400 Vac) 650 V (440 Vac) 720 V (480 Vac)
Maximum number of inputs	8				
Number of MPPTs	4				
Note a: The maximum input voltage is the maximum DC input voltage that the SUN2000 can withstand. If the input voltage exceeds this value, the SUN2000 may be damaged.					

Output

Technical Specifications	SUN2000-20KTL-M3	SUN2000-29.9KTL-M3	SUN2000-30KTL-M3	SUN2000-36KTL-M3	SUN2000-40KTL-M3
Rated output power	20,000 W	29,900 W	30,000 W	36,000 W	40,000 W
Maximum apparent power	22,000 VA	29,900 VA	33,000 VA[a]	40,000 VA	44,000 VA
Maximum active power (cosϕ = 1)	22,000 W	29,900 W	33,000 W[a]	40,000 W	44,000 W

 Copyright © Huawei Technologies Co., Ltd.

Technical Specifications	SUN2000-20KTL-M3	SUN2000-29.9KTL-M3	SUN2000-30KTL-M3	SUN2000-36KTL-M3	SUN2000-40KTL-M3
Rated output voltage	127 Vac (220 Vac), 3W/N +PE 230 Vac (400 Vac), 3W/N +PE	230 Vac (400 Vac), 3W/N +PE 277 Vac (480 Vac), 3W+PE	220 Vac (380 Vac), 3W/N +PE 230 Vac (400 Vac), 3W/N +PE 254 Vac (440 Vac), 3W+PE 277 Vac (480 Vac), 3W+PE	220 Vac (380 Vac), 3W/N +PE 230 Vac (400 Vac), 3W/N +PE 254 Vac (440 Vac), 3W+PE 277 Vac (480 Vac), 3W+PE	220 Vac (380 Vac), 3W/N +PE 230 Vac (400 Vac), 3W/N +PE 254 Vac (440 Vac), 3W+PE 277 Vac (480 Vac), 3W+PE
Maximum output voltage at long-term operation	See standards about the local power grid.				
Rated output current	52.5 A (220 Vac) 28.9 A (400 Vac)	43.2 A (400 Vac) 36.0 A (480 Vac)	45.6 A (380 Vac) 43.3 A (400 Vac) 39.4 A (440 Vac) 36.1 A (480 Vac)	54.7 A (380 Vac) 52.0 A (400 Vac) 47.3 A (440 Vac) 43.3 A (480 Vac)	60.8 A (380 Vac) 57.8 A (400 Vac) 52.5 A (440 Vac) 48.1 A (480 Vac)
Maximum output current	58.0 A (220 Vac) 31.9 A (400 Vac)	43.2 A (400 Vac) 36.0 A (480 Vac)	50.4 A (380 Vac) 47.9 A (400 Vac) 43.5 A (440 Vac) 39.9 A (480 Vac)	61.1 A (380 Vac) 58.0 A (400 Vac) 52.8 A (440 Vac) (Mexico) 48.4 A (480 Vac)	67.2 A (380 Vac) 63.8 A (400 Vac) 58.0 A (440 Vac) (Mexico) 53.2 A (480 Vac)
Output voltage frequency	50 Hz/60 Hz				
Power factor	0.8 leading–0.8 lagging				
Output DC component DCI	< 0.5% of the rated output				

 Copyright © Huawei Technologies Co., Ltd.

Technical Specifications	SUN2000-20KTL-M3	SUN2000-29.9KTL-M3	SUN2000-30KTL-M3	SUN2000-36KTL-M3	SUN2000-40KTL-M3
Maximum total harmonic distortion (THD) AC THDi	< 3% under rated conditions. Single harmonic meets the VDE4105 requirements.				
Note a: Under the Germany VDE-AR-N-4105, Belgium C10/11, and Austria TOR grid codes, the maximum apparent power and the maximum active power (cosΦ=1) of the SUN2000-30KTL-M3 are 30,000 VA and 30,000 W respectively.					

Protection

Technical Specifications	SUN2000-20KTL-M3	SUN2000-29.9KTL-M3	SUN2000-30KTL-M3	SUN2000-36KTL-M3	SUN2000-40KTL-M3
Overvoltage category	PV II/AC III				
Input DC switch	Supported				
Islanding protection	Supported				
Output overcurrent protection	Supported				
Input reverse connection protection	Supported				
String fault detection	Supported				
DC surge protection	Type II				
AC surge protection	Type II				
Insulation resistance detection	Supported				
Residual current monitoring unit (RCMU)	Supported This inverter includes an integrated residual current device (RCD). If an external residual current device (RCD) is used, a device of type A should be used, with a tripping current of 300 mA or higher.				

 Copyright © Huawei Technologies Co., Ltd.

Display and Communication

Technical Specifications	SUN2000-20KTL-M3	SUN2000-29.9KTL-M3	SUN2000-30KTL-M3	SUN2000-36KTL-M3	SUN2000-40KTL-M3
Display	LED indicator; WLAN+app				
RS485	Supported				
Built-in WLAN	Supported				
AC MBUS	Supported				
DC MBUS	Supported				
AFCI	Supported				
PID	Supported				

General Specifications

Technical Specifications	SUN2000-20KTL-M3	SUN2000-29.9KTL-M3	SUN2000-30KTL-M3	SUN2000-36KTL-M3	SUN2000-40KTL-M3
Dimensions (W x H x D)	640 mm x 530 mm x 270 mm				
Net Weight	43 kg				
Operating temperature	–25°C to +60°C (derated when the temperature is above +45°C)				
Humidity	0%–100%				
Cooling mode	Natural cooling				
Maximum operating altitude	0–4000 m				
Storage temperature	–40°C to +70°C				
IP rating	IP66				
Topology	Transformerless				

 Copyright © Huawei Technologies Co., Ltd.

Standards Compliance

Technical Specifications	SUN2000-20KTL-M3	SUN2000-29.9KTL-M3	SUN2000-30KTL-M3	SUN2000-36KTL-M3	SUN2000-40KTL-M3
Standards	EN/IEC 62109-1, EN/IEC 62109-2, NB/T 32004-2018				

SOLARONE.RO SISTEME FOTOVOLTAICE

A Grid Code

NOTE

The grid codes are subject to change. The listed codes are for reference only.

No.	Grid Code	Description
1	VDE-AR-N-4105	Germany low-voltage (LV) power grid
2	NB/T 32004	China Golden Sun LV power grid
3	UTE C 15-712-1(A)	France mainland power grid
4	UTE C 15-712-1(B)	France island power grid
5	UTE C 15-712-1(C)	France island power grid
6	VDE4110-MV	Germany medium-voltage (MV) power grid
7	G99-England	England 230 V power grid (I > 16 A)
8	G99-Scotland	Scotland 240 V power grid (I > 16 A)
9	CEI0-21	Italy power grid
10	RD1699/661	Spain LV power grid
11	RD1699/661-MV480	Spain MV power grid
12	C10/11	Belgium power grid
13	AUSTRALIA-AS4777_A-LV230	Australia power grid
14	AUSTRALIA-AS4777_B-LV230	Australia power grid
15	AUSTRALIA-AS4777_C-LV230	Australia power grid
16	AUSTRALIA-AS4777_NZ-LV230	New Zealand power grid

 Copyright © Huawei Technologies Co., Ltd.

No.	Grid Code	Description
17	IEC61727	IEC 61727 LV power grid (50 Hz)
18	CEI0-16	Italy power grid
19	CHINA-MV480	China MV standard power grid
20	CHINA-MV	China MV standard power grid
21	TAI-PEA	Thailand grid-tied standard power grid
22	TAI-MEA	Thailand grid-tied standard power grid
23	VDE4110-MV480	Germany MV standard power grid
24	G99-England-MV480	UK 480 V MV grid-tied power grid (I > 16 A)
25	IEC61727-MV480	IEC 61727 MV grid-tied power grid (50 Hz)
26	UTE C 15-712-1-MV480	France island power grid
27	TAI-PEA-MV480	Thailand MV grid-tied power grid (PEA)
28	TAI-MEA-MV480	Thailand MV grid-tied power grid (MEA)
29	C11/C10-MV480	Belgium MV power grid
30	Philippines	Philippines LV power grid
31	Philippines-MV480	Philippines MV power grid
32	NRS-097-2-1	South Africa standard power grid
33	IEC61727-60Hz	IEC 61727 LV grid-tied power grid (60 Hz)
34	IEC61727-60Hz-MV480	IEC 61727 MV grid-tied power grid (60 Hz)
35	CHINA_MV500	China MV standard power grid
36	PO12.3-MV480	Spain MV power grid
37	EN50549-LV	Ireland power grid
38	EN50549-MV480	Ireland MV power grid
39	ABNT NBR 16149	Brazil power grid
40	ABNT NBR 16149-MV480	Brazil MV power grid
41	SA_RPPs	South Africa LV power grid

 Copyright © Huawei Technologies Co., Ltd.

No.	Grid Code	Description
42	SA_RPPs-MV480	South Africa MV power grid
43	INDIA	India LV power grid
44	INDIA-MV500	India MV power grid
45	G99-TYPEA-LV	UK G99_TypeA_LV power grid
46	G99-TYPEB-LV	UK G99_TypeB_LV power grid
47	G99-TYPEB-HV	UK G99_TypeB_HV power grid
48	G99-TYPEB-HV-MV480	UK G99_TypeB_HV MV power grid
49	G99-TYPEA-HV	UK G99_TypeA_HV power grid
50	EN50549-MV400	Ireland new standard power grid
51	VDE-AR-N4110	Germany 230 V MV power grid
52	VDE-AR-N4110-MV480	Germany MV standard power grid
53	NTS	Spain power grid
54	NTS-MV480	Spain MV power grid
55	CEA	India LV power grid (CEA)
56	CEA-MV480	India MV power grid (CEA)
57	C10/11-MV400	Belgium MV power grid
58	ABNT NBR 16149-LV127	Brazil LV power grid
59	Mexico-LV220	Mexico LV power grid
60	Philippines-LV220-50Hz	Philippines LV power grid (50 Hz)
61	Philippines-LV220-60Hz	Philippines LV power grid (60 Hz)
62	TAIPOWER-LV220	Taiwan LV power grid

 Copyright © Huawei Technologies Co., Ltd.

B Device Commissioning

Step 1 Access **Device Commissioning** screen.

Figure B-1 Method 1: before login (not connected to the Internet)

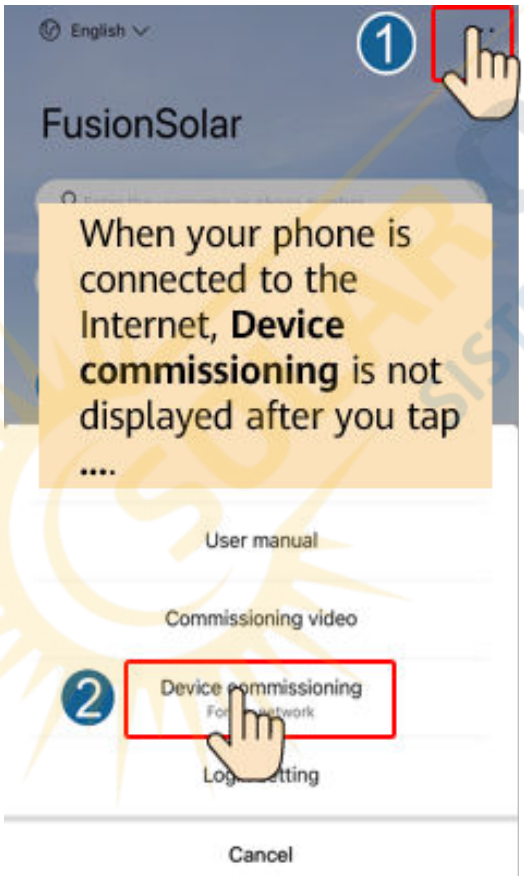

Figure B-2 Method 2: after login (connected to the Internet)

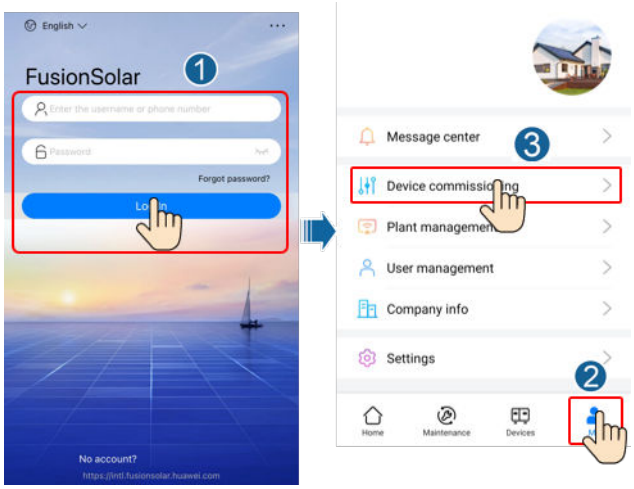

Step 2 Connect to the solar inverter WLAN and log in to the device commissioning screen as the **installer** user.

NOTICE

- When connecting to the SUN2000 directly from the mobile phone, keep the mobile phone visible within 3 meters of the SUN2000 to ensure the communication quality between the app and SUN2000. The distances are for reference only and may vary with mobile phones and shielding conditions.
- When connecting the SUN2000 to the WLAN over a router, ensure that the mobile phone and SUN2000 are in the WLAN coverage of the router and the SUN2000 is connected to the router.
- The router supports WLAN (IEEE 802.11 b/g/n, 2.4 GHz) and the WLAN signal reaches the SUN2000.
- The WPA, WPA2, or WPA/WPA2 encryption mode is recommended for routers. Enterprise-level encryption is not supported (for example, public hotspots requiring authentication such as airport WLAN). WEP and WPA TKIP are not recommended because these two encryption modes have serious security defects. If the access fails in WEP mode, log in to the router and change the encryption mode of the router to WPA2 or WPA/WPA2.

 Copyright © Huawei Technologies Co., Ltd.

Figure B-3 Quick settings

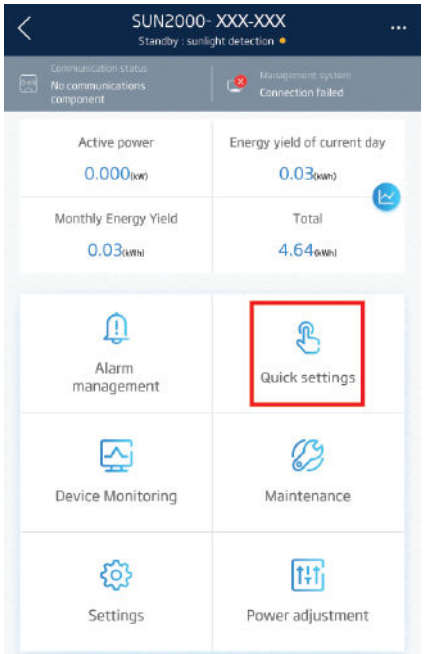

NOTE

- Obtain the initial password for connecting to the solar inverter WLAN from the label on the side of the solar inverter.
- Use the initial password upon first power-on and change it immediately after login. To ensure account security, change the password periodically and keep the new password in mind. Not changing the initial password may cause password disclosure. A password left unchanged for a long period of time may be stolen or cracked. If a password is lost, devices cannot be accessed. In these cases, the user is liable for any loss caused to the PV plant.
- When you access the **Device Commissioning** screen of the SUN2000 for the first time, you need to manually set the login password because the SUN2000 does not have an initial login password.

----End

C Setting Power Adjustment Parameters

Prerequisites

You have logged in to the app as **installer**.

Procedure

Step 1 On the home screen, tap **Power Adjustment** and set power parameters as required.

Figure C-1 Setting Power Adjustment Parameters

 Copyright © Huawei Technologies Co., Ltd.

NOTE

Power Quality Response Modes supported by the inverter can be implemented by setting Voltage rise suppression parameters.

Power derating for voltage variation (Volt-Watt mode): The inverter power output will vary in response to the AC grid voltage. This is switched on by default. This mode can be enabled via the configuration App. Please refer to the **Set Q-U and P-U through FusionSolar APP**, or contact Technical Support for more information.

Reactive power regulation for voltage variation (Volt-VAr mode): The power output or input will vary in response to the AC grid voltage. This function is switched off by default. This mode can be enabled via the configuration App. Please refer to the **Set Q-U and P-U through FusionSolar APP**, or contact Technical Support for more information.

----End

SOLARONE.RO SISTEME FOTOVOLTAICE

D Built-in PID Recovery

NOTICE

Ensure that the inverter ground cable is securely connected. Otherwise, the built-in PID repair function will be affected and electric shocks may occur.

Prerequisites

You have logged in to the app as **installer**.

Procedure

Step 1 On the home screen, choose **Settings** > **Feature Parameters** and set related parameters.

Figure D-1 Setting PID suppression parameters

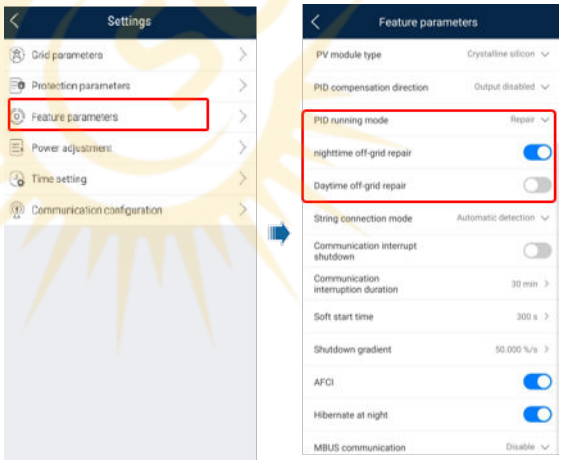

 Copyright © Huawei Technologies Co., Ltd.

NOTE

- Set **PID running mode** to **Repair** (disabled by default).
- Set **Nighttime off-grid repair** to (this parameter is displayed when **Built-in PID running mode** is set to **Repair**).

----End

SOLARONE.RO SISTEME FOTOVOLTAICE

E Rapid Shutdown

If all PV modules are equipped with optimizers, the PV system can perform a rapid shutdown, reducing the output voltage of the optimizers to below 30 V within 30s. The rapid shutdown is not supported if optimizers are configured for some PV modules.

Triggering methods of rapid shutdown:

- Method 1 (recommended): Turn off the AC switch between the inverter and the power grid.
- Method 2: Turn off the DC switch at the bottom of the inverter.
- Method 3: If the DIN5 port (port 15) of the inverter communications terminal is connected to a rapid shutdown button, press the button to trigger rapid shutdown.

 Copyright © Huawei Technologies Co., Ltd.

F Resetting Password

Step 1 Check that the AC and DC power supplies to the solar inverter are connected simultaneously, and that the and indicators are steady green or blink slowly for more than 3 minutes.

Step 2 Turn off the AC switch, set the DC switch at the bottom of the solar inverter to OFF, and wait until all indicators on the solar inverter panel turn off.

Step 3 Complete the following operations within 3 minutes:

1. Turn on the AC switch and wait until the indicator blinks.
2. Turn off the AC switch and wait until all indicators on the solar inverter panel turn off.
3. Turn on the AC switch and wait until all LED indicators on the inverter panel blink and turn off after about 30s.

Step 4 Wait until the three indicators on the inverter panel blink green quickly and then blink red quickly, indicating that the password has been restored.

Step 5 Reset the password within 10 minutes. (If no operation is performed within 10 minutes, all parameters of the solar inverter remain the same as those before the reset.)

1. Wait until the indicator blinks.
2. Obtain the initial WLAN hotspot name (SSID) and initial password (PSW) from the label on the side of the solar inverter to connect to the app.
3. On the login page, set a new login password and log in to the app.

Step 6 Set router and management system parameters to implement remote management.

----End

NOTICE

You are advised to reset the password in the morning or at night when the solar irradiance is low.

 Copyright © Huawei Technologies Co., Ltd.

G Setting Dry Contact Scheduling Parameters

Prerequisites

You have logged in to the app as **installer**.

Procedure

Step 1 On the home screen, choose **Settings** > **Power adjustment** and set **Dry contact scheduling** to .

Figure G-1 Setting dry contact scheduling parameters

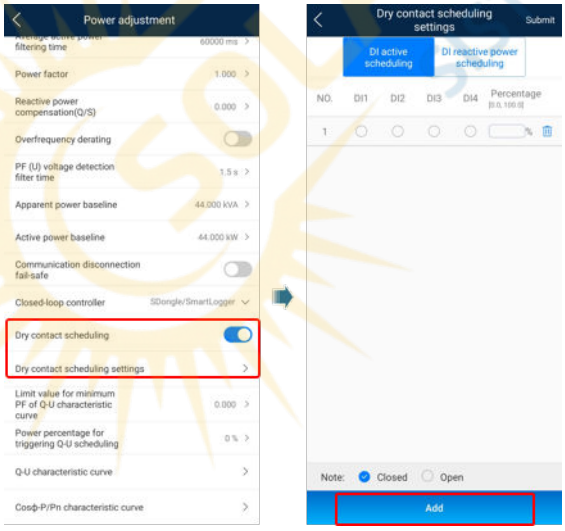

----End

 Copyright © Huawei Technologies Co., Ltd.

H AFCI

Function

If PV modules or cables are not properly connected or damaged, electric arcs may occur, which may cause fire. Huawei SUN2000s provide unique arc detection in compliance with UL 1699B-2018 to ensure the safety of users' lives and property.

This function is enabled by default. The SUN2000 automatically detects arc faults. To disable this function, log in to the FusionSolar app, enter the **Device Commissioning** screen, choose **Settings** > **Feature parameters**, and disable **AFCI**.

Clearing Alarms

The AFCI function involves the **DC arc fault** alarm.

The SUN2000 has the AFCI alarm automatic clearance mechanism. If an alarm is triggered for less than five times within 24 hours, the SUN2000 automatically clears the alarm. If the alarm is triggered for five times or more within 24 hours, the SUN2000 locks for protection. You need to manually clear the alarm on the SUN2000 so that it can work properly.

You can manually clear the alarm as follows:

- **Method 1**: FusionSolar App

  Log in to the FusionSolar app and choose **My** > **Device Commissioning**. On the **Device Commissioning** screen, connect and log in to the SUN2000 that generates the AFCI alarm, tap **Alarm management**, and tap **Clear** on the right of the **DC arc fault** alarm to clear the alarm.

 Copyright © Huawei Technologies Co., Ltd.

Figure H-1 Alarm management

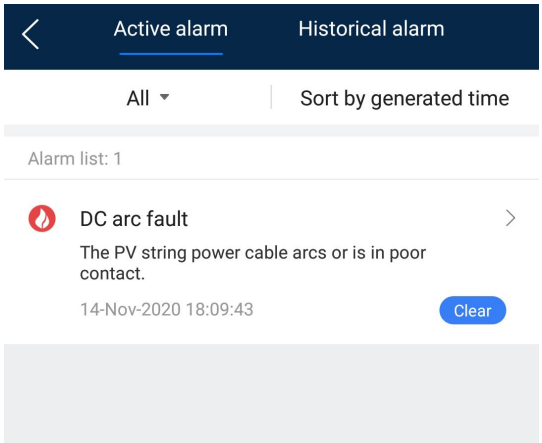

- **Method 2**: FusionSolar Smart PV Management System

  Log in to the FusionSolar Smart PV Management System using a non-owner account, choose **Intelligent O&M** > **Alarm Management**, select the **DC arc fault** alarm, and click **Clear** to clear the alarm.

Figure H-2 Clearing alarms

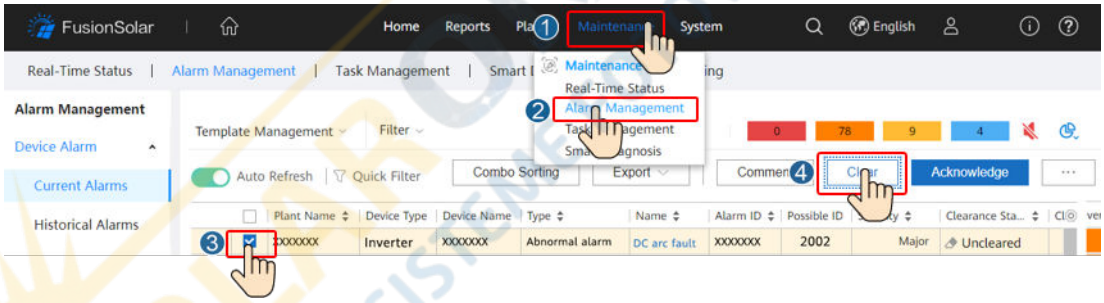

Switch to the owner account with PV plant management rights. On the home page, click the PV plant name to go to the PV plant page, and click **OK** as prompted to clear the alarm.

Figure H-3 Owner confirmation

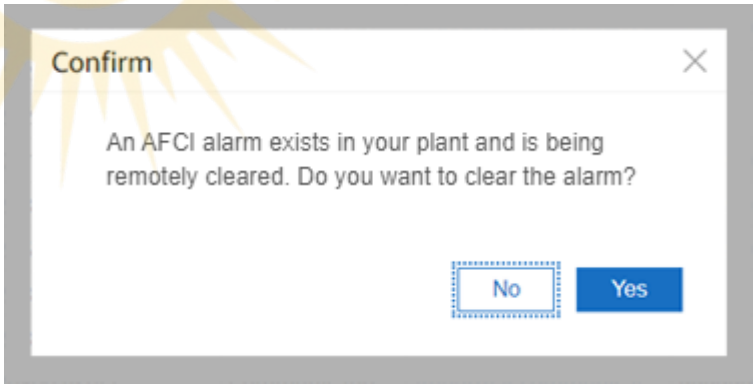

I Smart I-V Curve Diagnosis

For details, see **FusionSolar 6.0 Smart PV Management System Smart I-V Curve Diagnosis User Manual**.

SOLARONE.RO SISTEME FOTOVOLTAICE

 Copyright © Huawei Technologies Co., Ltd.

J DRM Configuration Guide for Standard As NZS4777.2

If Demand Response Modes (DRM0) are required, then the installer will need to connect the Huawei SmartLogger3000. Refer to the Huawei document SmartLogger3000 DRM Configuration Guide for Standard AS NZS4777.2 of how to connect the DRED and how to configure the inverter and Smart Logger for use with the DRED.

Copyright © Huawei Technologies Co., Ltd.

K Acronyms and Abbreviations

A	
AFCI	arc-fault circuit interrupter
L	
LED	light emitting diode
M	
MBUS	monitoring bus
MPP	maximum power point
MPPT	maximum power point tracking
P	
PE	protective earthing
PID	potential induced degradation
PV	photovoltaic
R	
RCD	residual current device

SOLARONE.RO SISTEME FOTOVOLTAICE