LUNA2000-(5-30)-S0

User Manual

Issue	**01**
Date	**2020-09-18**

HUAWEI TECHNOLOGIES CO., LTD.

Copyright © Huawei Technologies Co., Ltd. 2020. All rights reserved.

No part of this document may be reproduced or transmitted in any form or by any means without prior written consent of Huawei Technologies Co., Ltd.

Trademarks and Permissions

HUAWEI and other Huawei trademarks are trademarks of Huawei Technologies Co., Ltd.

All other trademarks and trade names mentioned in this document are the property of their respective holders.

Notice

The purchased products, services and features are stipulated by the contract made between Huawei and the customer. All or part of the products, services and features described in this document may not be within the purchase scope or the usage scope. Unless otherwise specified in the contract, all statements, information, and recommendations in this document are provided "AS IS" without warranties, guarantees or representations of any kind, either express or implied.

The information in this document is subject to change without notice. Every effort has been made in the preparation of this document to ensure accuracy of the contents, but all statements, information, and recommendations in this document do not constitute a warranty of any kind, express or implied.

Huawei Technologies Co., Ltd.

Address: Huawei Industrial Base
Bantian, Longgang
Shenzhen 518129
People's Republic of China

Website: hiips://e.huawei.com

About This Document

Purpose

This document describes the LUNA2000 battery in terms of its overview, application scenarios, installation and commissioning, system maintenance, and technical specifications. The LUNA2000 battery consists of a LUNA2000-5KW-C0 power control module and LUNA2000-5-E0 battery expansion modules.

Intended Audience

This document is intended for:

- Sales engineers
- System engineers
- Technical support engineers

Symbol Conventions

The symbols that may be found in this document are defined as follows.

Symbol	Description
DANGER	Indicates a hazard with a high level of risk which, if not avoided, will result in death or serious injury.
WARNING	Indicates a hazard with a medium level of risk which, if not avoided, could result in death or serious injury.
CAUTION	Indicates a hazard with a low level of risk which, if not avoided, could result in minor or moderate injury.
NOTICE	Indicates warning information about device or environment security which, if not avoided, could result in equipment damage, data loss, performance deterioration, or unanticipated results. NOTICE is used to address practices not related to personal injury.
NOTE	Supplements the important information in the main text. NOTE is used to address information not related to personal injury, equipment damage, and environment deterioration.

Copyright © Huawei Technologies Co., Ltd.

Change History

Changes between document issues are cumulative. The latest document issue contains all the changes made in earlier issues.

Issue 01 (2020-09-15)

This issue is the first official release.

SOLARONE.RO® SISTEME FOTOVOLTAICE

Contents

About This Document ii

1 Safety Precautions 1

1.1 General Safety 1
1.2 Personnel Requirements 3
1.3 Electrical Safety 4
1.4 Installation Environment Requirements 5
1.5 Transportation Requirements 6
1.6 Mechanical Safety 6
1.7 Commissioning 7
1.8 Maintenance and Replacement 8

2 Product Description 9

2.1 Overview 9
2.2 Appearance 13
2.3 Label Description 15
2.4 Features 16
2.5 Working Principles 17

3 Application Scenarios and Settings 19

3.1 Grid-tied ESS 19
3.1.1 Grid-tied ESS Networking 19
3.1.2 Setting the Grid-tied ESS Mode 22
3.2 Grid-tied and Off-grid ESS 27
3.2.1 Grid-tied and Off-grid ESS Networking 27
3.2.2 Setting the Grid-tied and Off-grid ESS Mode 28
3.3 Pure Off-grid ESS 30
3.3.1 Pure Off-grid ESS Networking 30
3.3.2 Setting the Pure Off-grid ESS Mode 30

4 System Installation 32

4.1 Checking Before the Installation 32
4.2 Preparing Tools and Instruments 32
4.3 Determining the Installation Position 34
4.4 Equipment Installation 35

 Copyright © Huawei Technologies Co., Ltd.

4.4.1 Floor-Mounted Installation 35
4.4.2 Wall-Mounted Installation 41

5 Electrical Connection 45

5.1 Preparing Cables 46
5.2 Internal Electrical Connections of the Battery 47
5.2.1 Installing an Internal Ground Cable 47
5.2.2 Installing Internal DC Terminals 48
5.2.3 Connecting Internal Signal Cables 49
5.3 External Electrical Connections of the Battery 50
5.3.1 Installing a PE Cable 51
5.3.2 Installing DC Input Power Cables 53
5.3.3 Installing a Signal Cable 55
5.4 (Optional) Cascading Batteries 58
5.5 Installing the Cover 59

6 System Commissioning 61

6.1 Verification Before Power-On 61
6.2 System Power-On 62
6.3 Battery Commissioning 63
6.3.1 Battery Deployment 63
6.3.2 Battery Control 64
6.3.3 Battery Status Check 67
6.3.4 Battery Maintenance and Upgrade 67

7 System Maintenance 71

7.1 System Power-Off 71
7.2 Routine Maintenance 71
7.3 Troubleshooting 72
7.4 Battery Storage and Recharge 72

8 Technical Specifications 75

8.1 LUNA2000-5KW-C0 75
8.2 LUNA2000-5-E0 76

9 FAQ 77

9.1 How Do I Replace a Fuse? 77

A Acronyms and Abbreviations 79

1 Safety Precautions

1.1 General Safety
1.2 Personnel Requirements
1.3 Electrical Safety
1.4 Installation Environment Requirements
1.5 Transportation Requirements
1.6 Mechanical Safety
1.7 Commissioning
1.8 Maintenance and Replacement

1.1 General Safety

Declaration

Before installing, operating, and maintaining the equipment, read this document and observe all the safety instructions on the equipment and in this document.

The "NOTICE", "WARNING", and "DANGER" statements in this document do not cover all the safety instructions. They are only supplements to the safety instructions. Huawei will not be liable for any consequence caused by the violation of general safety requirements or design, production, and usage safety standards.

Ensure that the equipment is used in environments that meet its design specifications. Otherwise, the equipment may become faulty, and the resulting malfunction, component damage, personal injuries, or property damage are not covered under the warranty.

Follow local laws and regulations when installing, operating, or maintaining the equipment. The safety instructions in this document are only supplements to local laws and regulations.

Huawei will not be liable for any consequences of the following circumstances:

- Operation beyond the conditions specified in this document
- Installation or use in environments which are not specified in relevant international or national standards

 Copyright © Huawei Technologies Co., Ltd.

- Unauthorized modifications to the product or software code or removal of the product
- Failure to follow the operation instructions and safety precautions on the product and in this document
- Equipment damage due to force majeure, such as earthquakes, fire, and storms
- Damage caused during transportation by the customer
- Damage caused by storage conditions that do not meet the requirements specified in related documents

General Requirements

DANGER

Do not work with power on during installation.

- Do not install, use, or operate outdoor equipment and cables (including but not limited to moving equipment, operating equipment and cables, inserting connectors to or removing connectors from signal ports connected to outdoor facilities, working at heights, and performing outdoor installation) in harsh weather conditions such as lightning, rain, snow, and level 6 or stronger wind.
- After installing the equipment, remove idle packing materials such as cartons, foam, plastics, and cable ties from the equipment area.
- In the case of a fire, immediately leave the building or the equipment area, and turn on the fire alarm bell or make an emergency call. Do not enter the building on fire in any case.
- Do not scrawl, damage, or block any warning label on the equipment.
- Tighten screws using tools when installing the equipment.
- Understand the components and functioning of a grid-tied PV power system and relevant local standards.
- Repaint any paint scratches caused during equipment transportation or installation in a timely manner. Equipment with scratches cannot be exposed to an outdoor environment for a long period of time.
- Do not open the host panel of the equipment.
- Without prior consent from the manufacturer, do not alter the internal structure or installation procedure of the equipment.

Personal Safety

- Wear proper personal protective equipment (PPE) during operation. If there is a probability of personal injury or equipment damage, immediately stop the operations, report the case to the supervisor, and take feasible protective measures.
- Use tools correctly to avoid hurting people or damaging the equipment.
- Do not touch the energized equipment, as the enclosure is hot.
- To ensure personal safety and normal use of the equipment, the equipment must be reliably grounded before use.
- When a battery is faulty, the temperature may exceed the burn threshold of the touchable surface. Therefore, avoid touching the battery.
- Do not disassemble or damage the battery. The released electrolyte is harmful to your skin and eyes. Avoid contact with the electrolyte.

 Copyright © Huawei Technologies Co., Ltd.

- Do not place irrelevant objects on the top of the equipment or insert them into any position of the equipment.
- Do not place inflammables around the equipment.
- To prevent explosions and body injury, do not place batteries in a fire.
- Do not place the battery module in water or other liquids.
- Do not short-circuit wiring terminals of batteries. Short circuits can cause a fire.
- Batteries may cause electric shocks and high short-circuit currents. When using the battery, pay attention to the following points:

  (a) Remove any metal objects from yourself, such as watches and rings.

  (b) Use tools with insulated handles.

  (c) Wear rubber gloves and boots.

  (d) Do not place tools or metal parts on top of batteries.

  (e) Before connecting or disconnecting battery terminals, disconnect the charging power supply.

  (f) Check whether batteries are accidentally grounded. If it is accidentally grounded, remove the power supply from the ground. Touching any part of a grounded battery can cause an electric shock. If these grounding points are removed during installation and maintenance, the possibility of electric shocks can be reduced.
- Do not use water to clean electrical components inside or outside of a cabinet.
- Do not stand on, lean on, or sit on the top of the equipment.
- Do not damage the modules of the equipment.

1.2 Personnel Requirements

- Personnel who plan to install or maintain Huawei equipment must receive thorough training, understand all necessary safety precautions, and be able to correctly perform all operations.
- Only qualified professionals or trained personnel are allowed to install, operate, and maintain the equipment.
- Only qualified professionals are allowed to remove safety facilities and inspect the equipment.
- Personnel who will operate the equipment, including operators, trained personnel, and professionals, should possess the local national required qualifications in special operations such as high-voltage operations, working at heights, and operations of special equipment.
- Only professionals or authorized personnel are allowed to replace the equipment or components (including software).

NOTE

- Professionals: personnel who are trained or experienced in equipment operations and are clear of the sources and degree of various potential hazards in equipment installation, operation, and maintenance
- Trained personnel: personnel who are technically trained, have required experience, are aware of possible hazards on themselves in certain operations, and are able to take protective measures to minimize the hazards on themselves and other people
- Operators: operation personnel who may come in contact with the equipment, except trained personnel and professionals

 Copyright © Huawei Technologies Co., Ltd.

1.3 Electrical Safety

Grounding Requirements

- For the equipment that needs to be grounded, install the protective earthing (PE) cable first when installing the equipment and remove the PE cable last when removing the equipment.
- Do not damage the ground conductor.
- Do not operate the equipment in the absence of a properly installed ground conductor.
- Ensure that the equipment is connected permanently to the protective ground. Before operating the equipment, check the electrical connection to ensure that it is securely grounded.

General Requirements

DANGER

Before connecting cables, ensure that the equipment is intact. Otherwise, electric shocks or fire may occur.

- Ensure that all electrical connections comply with local electrical standards.
- Obtain approval from the local electric utility company before using the equipment in grid-tied mode.
- Ensure that the cables you prepared meet local regulations.
- Use dedicated insulated tools when performing high-voltage operations.

DC Operation

DANGER

Do not connect or disconnect power cables with power-on. Transient contact between the core of the power cable and the conductor will generate electric arcs or sparks, which may cause fire or personal injury.

- Before connecting cables, switch off the disconnector on the upstream equipment to cut off the power supply if people may contact energized components.
- Before connecting a power cable, check that the label on the power cable is correct.
- If the equipment has multiple inputs, disconnect all the inputs before operating the equipment.

Cabling Requirements

- When routing cables, ensure that a distance of at least 30 mm exists between the cables and heat-generating components or areas. This prevents damage to the insulation layer of the cables.
- Bind cables of the same type together. When routing cables of different types, ensure that they are at least 30 mm away from each other.

 Copyright © Huawei Technologies Co., Ltd.

- Ensure that the cables used in a grid-tied PV power system are properly connected and insulated and meet specifications.

1.4 Installation Environment Requirements

- Ensure that the equipment is installed in a dry and well-ventilated environment.
- The installation position must be away from direct sunlight and rain.
- The installation position must be far away from fire sources.
- The installation position must be far away from water sources such as taps, sewer pipes, and sprinklers to prevent water seepage.
- The support surface must be solid and flat.
- Children are not allowed to enter the installation position.
- To prevent fire due to high temperature, ensure that the ventilation vents or heat dissipation system are not blocked when the equipment is running.
- Do not expose the equipment to flammable or explosive gas or smoke. Do not perform any operation on the equipment in such environments.

Figure 1-1 Installation environment

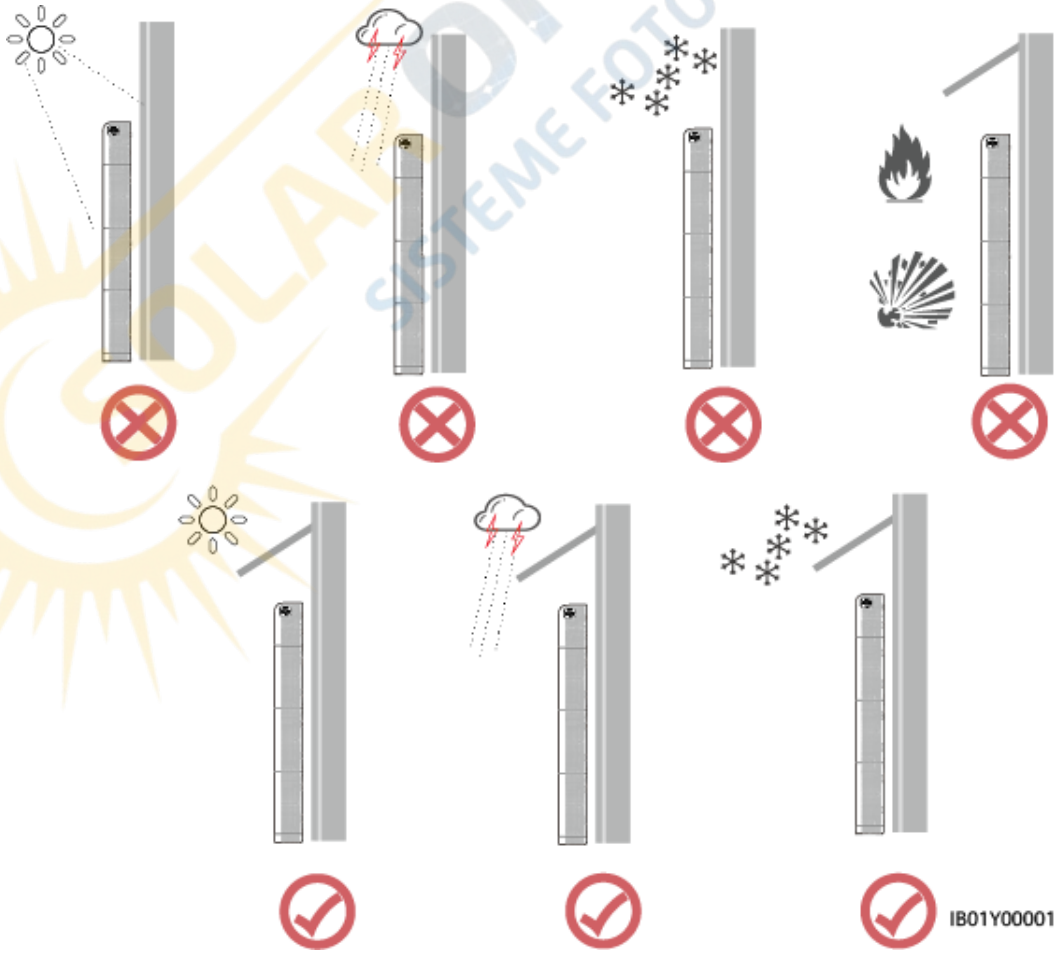

CAUTION

The operation and service life of the battery depend on the operating temperature. Operate the battery at a temperature equal to or better than the ambient temperature. The recommended operating temperature ranges from 15 ℃ to 30 ℃.

1.5 Transportation Requirements

The product passes the certifications of the UN38.3 (UN38.3: Section 38.3 of the Sixth Revised Edition of the Recommendations on the Transport of Dangerous Goods, Manual of Tests and Criteria) and SN/T 0370.2-2009 (Part 2: Performance Test of the Rules for the Inspection of Packaging for Exporting Dangerous Goods). This product belongs to class 9 dangerous goods.

The product can be delivered to the site directly and transported by land and water. The packing case must be secured for transportation, compliant with related China standards, and printed with marks such as anti-collision and moisture prevention. Affected by external environment factors, such as temperature, transportation, and storage, the product specifications at the delivery date prevail.

Protect the packing case with the product from the following situations:

- Being dampened by rains, snows, or falling into water
- Falling or mechanical impact
- Being upside-down or tilted

1.6 Mechanical Safety

Using Ladders

- Use wooden or fiberglass ladders when you need to perform live working at heights.
- When a step ladder is used, ensure that the pull ropes are secured and the ladder is held firm.
- Before using a ladder, check that it is intact and confirm its load bearing capacity. Do not overload it.
- Ensure that the wider end of the ladder is at the bottom, or protective measures have been taken at the bottom to prevent the ladder from sliding.
- Ensure that the ladder is securely positioned. The recommended angle for a ladder against the floor is 75 degrees, as shown in the following figure. An angle rule can be used to measure the angle.

 Copyright © Huawei Technologies Co., Ltd.

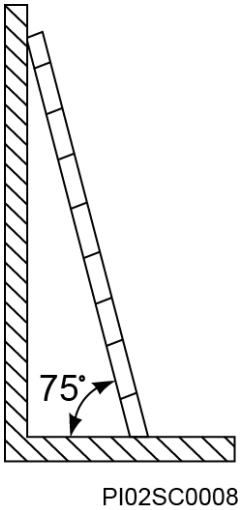

- When climbing a ladder, take the following precautions to reduce risks and ensure safety:
  - Keep your body steady.
  - Do not climb higher than the fourth rung of the ladder from the top.
  - Ensure that your body's center of gravity does not shift outside the legs of the ladder.

Drilling Holes

When drilling holes into a wall or floor, observe the following safety precautions:

- Wear goggles and protective gloves when drilling holes.
- When drilling holes, protect the equipment from shavings. After drilling, clean up any shavings that have accumulated inside or outside the equipment.

Moving Heavy Objects

- Be cautious to avoid injury when moving heavy objects.

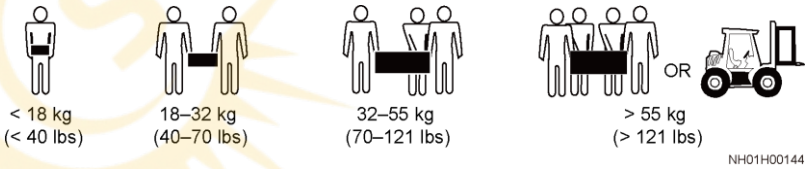

- When moving the equipment by hand, wear protective gloves to prevent injuries.

1.7 Commissioning

When the equipment is powered on for the first time, ensure that professional personnel set parameters correctly. Incorrect settings may result in inconsistency with local certification and affect the normal operation of the equipment.

1.8 Maintenance and Replacement

DANGER

High voltage generated by the equipment during operation may cause an electric shock, which could result in death, serious injury, or serious property damage. Prior to maintenance, power off the equipment and strictly comply with the safety precautions in this document and relevant documents.

- Maintain the equipment with sufficient knowledge of this document and using proper tools and testing equipment.
- Before maintaining the equipment, power it off and follow the instructions on the delayed discharge label to ensure that the equipment is powered off.
- Place temporary warning signs or erect fences to prevent unauthorized access to the maintenance site.
- If the equipment is faulty, contact your dealer.
- The equipment can be powered on only after all faults are rectified. Failing to do so may escalate faults or damage the equipment.
- Do not open the cover without authorization. Otherwise, electric shocks may occur, and the resulting faults are beyond warranty scope.
- Installation personnel, maintenance personnel, and technical support personnel must be trained to operate and maintain the equipment safely and correctly, take comprehensive precautionary measures, and be equipped with protective instruments.
- Before moving or reconnecting the equipment, disconnect the mains and batteries and wait for five minutes until the equipment powers off. Before maintaining the equipment, check that no dangerous voltages remain in the DC bus or components to be maintained by using a multimeter.
- Battery maintenance should be carried out or supervised by personnel who are familiar with batteries and the precautions required.
- When replacing batteries, replace them with batteries or battery strings of the same type.
- Take out all tools and parts from the equipment after maintenance is complete.
- If the equipment is not used for a long time, store and recharge batteries according to this document.

 Copyright © Huawei Technologies Co., Ltd.

2 Product Description

2.1 Overview
2.2 Appearance
2.3 Label Description
2.4 Features
2.5 Working Principles

2.1 Overview

Function

The LUNA2000 battery consists of a power control module and battery expansion modules. It can store and release electric energy based on the requirements of the inverter management system. The input and output ports of the LUNA2000 battery are high-voltage direct current (HVDC) ports.

- Battery charge: The power control module connects to the battery terminals (BAT+ and BAT–) of the inverter. Under the control of the inverter, the power control module charges the batteries and stores excessive PV energy in batteries.
- Battery discharge: When the PV energy is insufficient to supply power to the loads, the system controls the batteries to supply power to the loads. The battery energy is output to the loads through the inverter.

Model

- Model of the power control module in the LUNA2000 battery: LUNA2000-5KW-C0

Figure 2-1 Model number

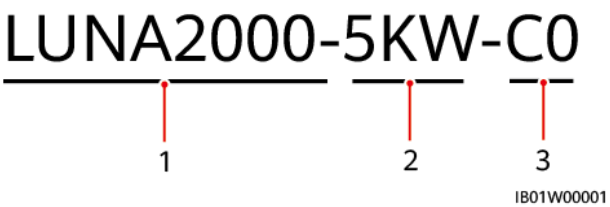

Table 2-1 Model description

No.	Meaning	Value
1	Product	LUNA2000: LUNA2000 battery
2	Power level	5KW: The power level is 5 kW.
3	Design code	C0: product series of the power control module

- Model of battery expansion modules in the LUNA2000 battery: LUNA2000-5-E0

Figure 2-2 Model number

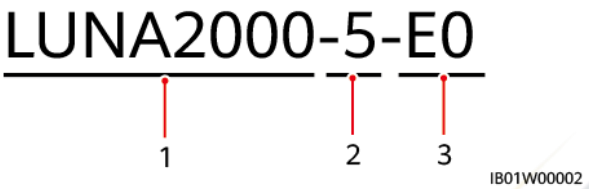

Table 2-2 Model description

No.	Meaning	Value
1	Product	LUNA2000: residential battery
2	Energy level	5: The energy level is 5 kWh.
3	Design code	E0: battery pack module

- The model of the LUNA2000 battery is LUNA2000-5-S0.

Figure 2-3 Model number

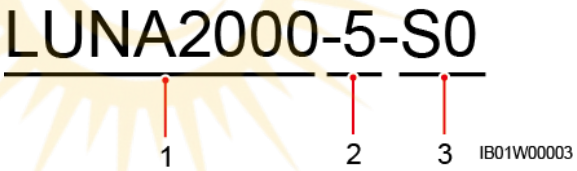

Table 2-3 Model description

No.	Meaning	Value
1	Product	LUNA2000: residential battery
2	Energy level	5: The capacity level is 5 kWh. This product supports 5 kWh to 30 kWh.

No.	Meaning	Value
3	Design code	S0: battery

Battery Capacity Description

The battery supports power and capacity expansion. Two power control modules can be connected in parallel. One power control module supports a maximum of three battery expansion modules.

Figure 2-4 Battery capacity description

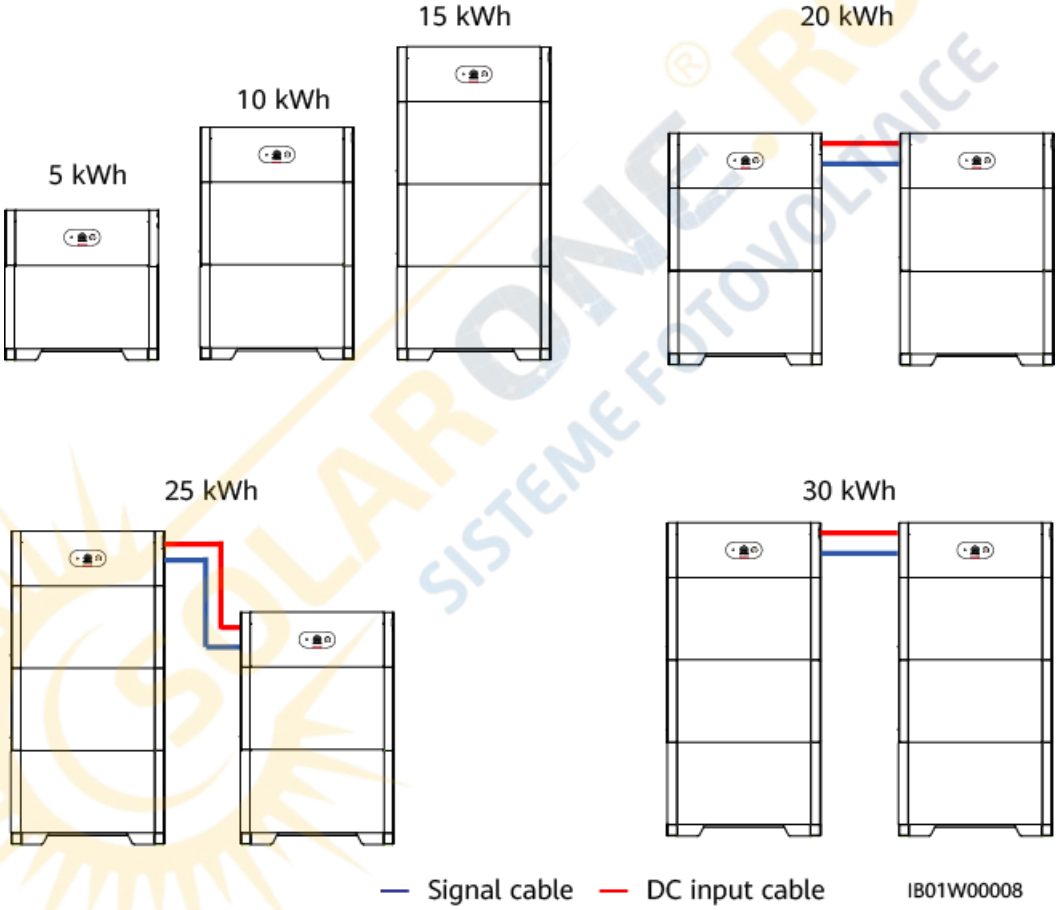

Networking Application

The LUNA2000 battery is applicable to the grid-tied systems of residential rooftop PV plants. Typically, a grid-tied system consists of PV strings, LUNA2000 batteries, an inverter, an AC switch, and a power distribution box (PDB).

Figure 2-5 Networking (dashed boxes indicate optional components)

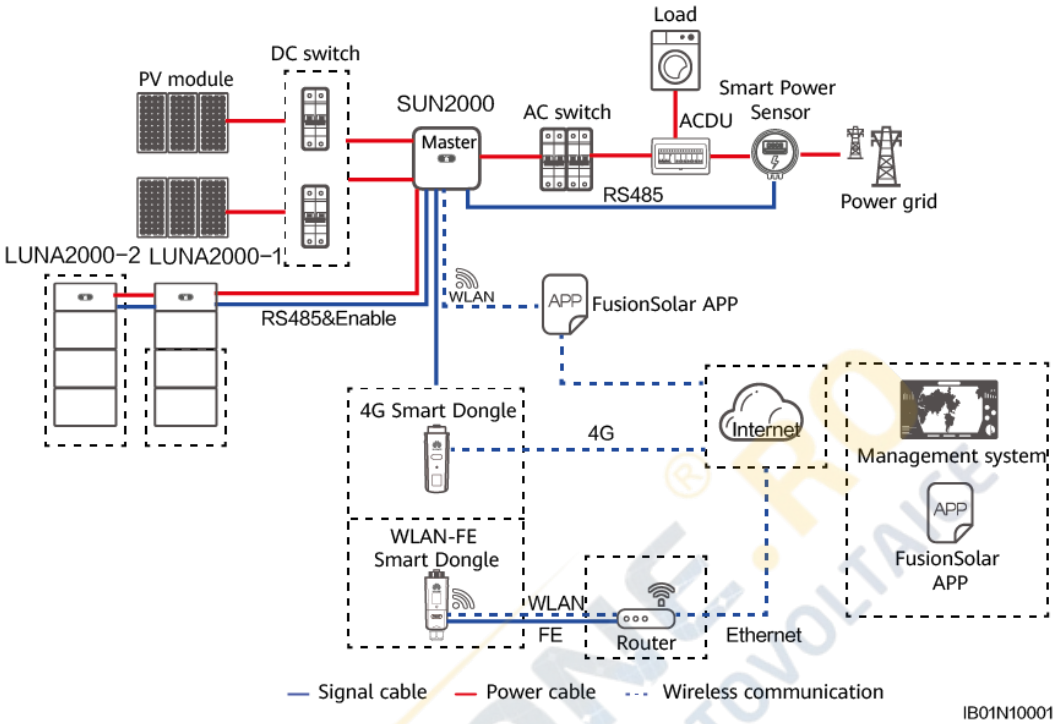

- The input and output ports of the LUNA2000 battery are connected to the battery ports of the inverter.
- The following communication modes are supported by the LUNA2000 battery:
  - Connect the LUNA2000 battery to the inverter over the RS485 port and Enable port to implement communication and control between the inverter and the LUNA2000 battery.
  - Use the mobile phone app to directly connect to the inverter or connect to the inverter in the same LAN to manage and maintain the LUNA2000 battery.
  - Connect the inverter to the public network through the Smart Dongle to manage and maintain the LUNA2000 battery through the management system.

2.2 Appearance

Battery

Figure 2-6 Battery appearance

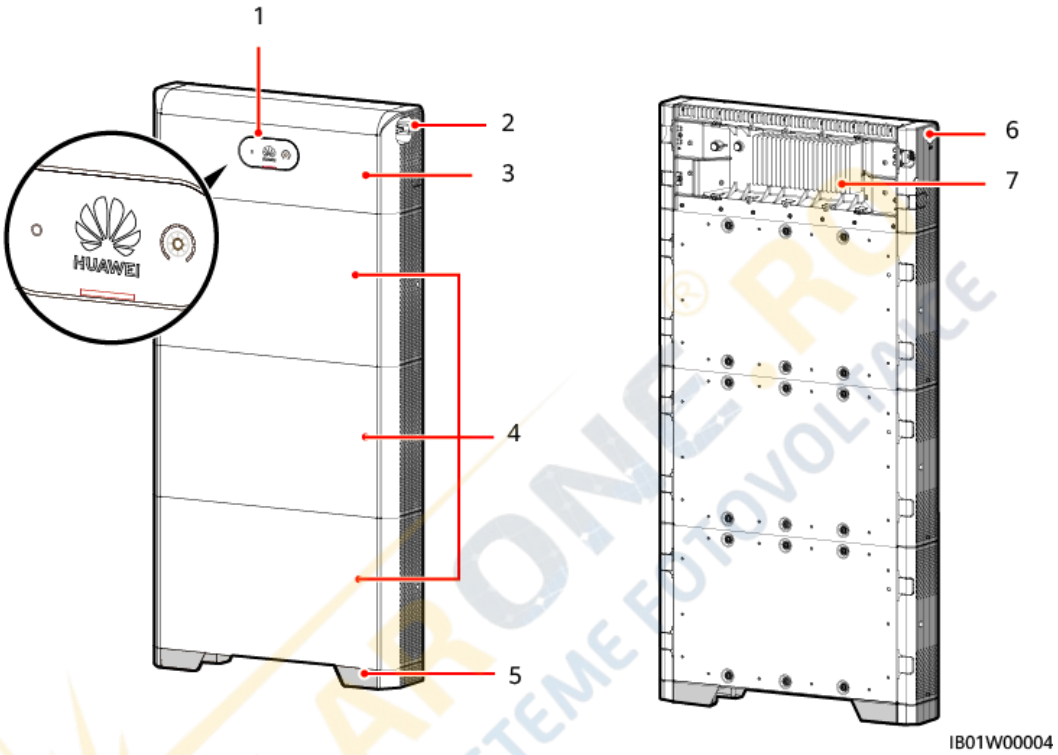

(1) LED indicator	(2) DC switch (DC SWITCH)	(3) Power control module
(4) Battery expansion modules	(5) Installation base	(6) Black start switch
(7) Heat sink		

Power Control Module

The power of the power control module is 5 kW.

Copyright © Huawei Technologies Co., Ltd.

Figure 2-7 Power control module

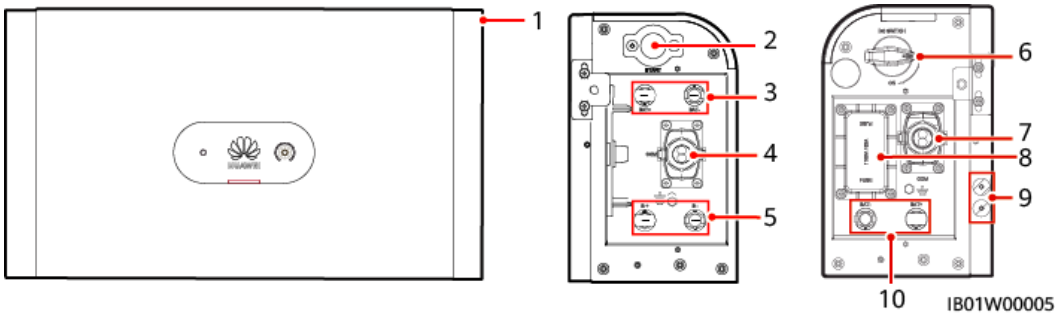

(1) Power control module	(2) Black start switch	(3) Battery terminals (BAT+/BAT–)
(4) COM port (COM)	(5) Battery cascading terminals (B+/B–)	(6) DC switch (DC SWITCH)
(7) COM port (COM)	(8) Fuse (9) Ground point	(10) Battery terminals (BAT+/BAT–)

Battery Expansion Module

The standard capacity of a battery expansion module is 5 kWh.

Figure 2-8 Battery expansion module

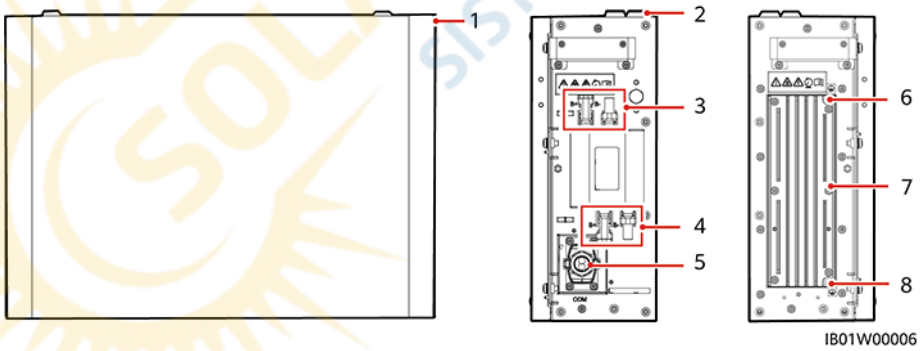

(1) Battery expansion module	(2) Boss for alignment	(3) Battery cascading terminals (B+/B–)
(4) Battery cascading terminals (B+/B–)	(5) COM port (COM)	(6) Ground point
(7) Heat sink	(8) Ground point	

2.3 Label Description

Enclosure Labels

Table 2-4 Enclosure label description

Icon	Name	Meaning
	Burn warning	Do not touch the product, as the shell is hot when it is running.
	Delayed discharge	• High voltage exists after the battery is powered off. It takes 5 minutes for the battery to discharge to the safe voltage.
	Operator	• High voltage exists after the battery is powered on. Only qualified and trained electrical technicians are allowed to install and operate the battery. • Ground the battery before powering it on.
	Refer to documentation	Reminds operators to refer to the documentation provided with the equipment.
	Grounding	Indicates the position for connecting the PE cable.

NOTE

The labels are for reference only.

Copyright © Huawei Technologies Co., Ltd.

Nameplate

Figure 2-9 Nameplate (power control module)

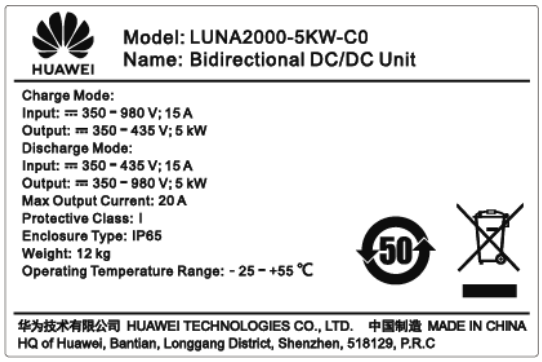

Figure 2-10 Nameplate (battery expansion module)

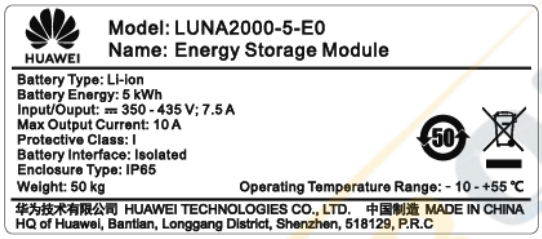

2.4 Features

Multi-Scenario and Multi-Working Mode

- Supports multiple working modes such as grid-tied, grid-tied and off-grid, pure off-grid multi-scenario, self-consumption, time-of-use, and full fed to the grid modes.
- Allows users to query the total discharge capacity in the product life cycle in real time.

Intelligent and Simple Operation

Works with the inverter, supports plug-and-play, and integrates the mobile phone app and management system.

Easy Installation and Replacement

- Standard battery DC terminals are used for system connection.
- Modular design is adopted for batteries.
- The installation or replacement can be performed by two persons.

Flexible Scalability

The battery supports power expansion, battery capacity expansion, and hybrid use of old and new batteries.

Intelligent O&M

- The factory defaults meet the requirements of target markets and the battery can be started by pressing only one button and supports black startup.
- The LED indicator shows the status. You can also use the mobile phone app to perform local and remote operations.
- The cloud data management system is used to manage the battery anytime and anywhere.

Low Investment

- Only common installation tools are required.
- The battery features high efficiency and power density, which saves installation space.
- The battery features easy O&M.

2.5 Working Principles

Schematic Diagram

The LUNA2000 converts HVDC generated by PV strings into low-voltage direct current (LVDC) through DC-to-DC conversion and stores the power in batteries. It can also convert LVDC into HVDC and feed the power into the power grid through the inverter.

Figure 2-11 Schematic diagram

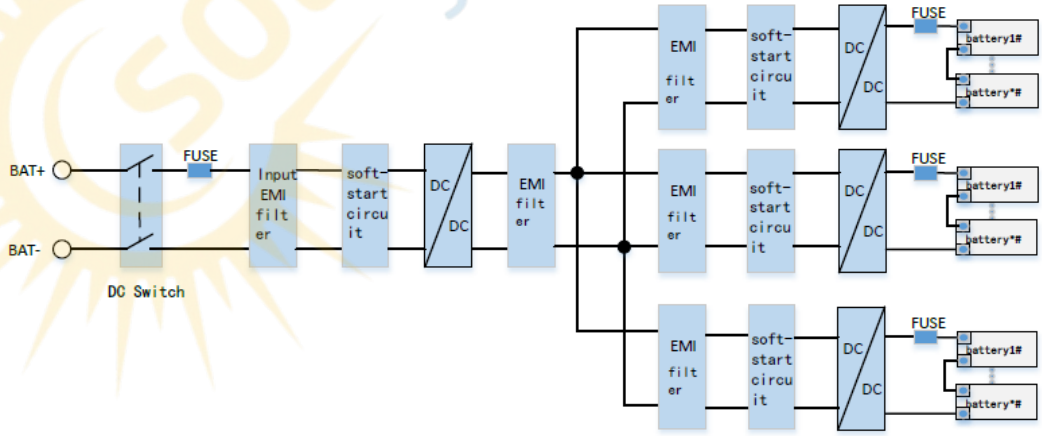

Working Mode

The LUNA2000 battery can work in hibernation, standby, or operating mode.

Table 2-5 Working mode

Working Mode	Description
Hibernation mode	The internal auxiliary power source and DC-DC converter of the battery do not work.
Standby mode	The auxiliary power source inside the battery works, and the DC-DC converter does not work.
Operating mode	The internal auxiliary power source of the battery works, and the DC-DC converter charges the battery. The DC-DC converter discharges.

SOLARONE.RO® SISTEME FOTOVOLTAICE

3 Application Scenarios and Settings

The LUNA2000 battery is mainly used in grid-tied systems of residential rooftop PV plants. The system can be classified into the following three types based on application scenarios:

- Grid-tied energy storage system (ESS)
- Grid-tied and off-grid ESS
- Off-grid ESS

Multiple working modes can be set, such as maximum self-consumption, time-of-use, and fully fed to the grid.

3.1 Grid-tied ESS

3.2 Grid-tied and Off-grid ESS

3.3 Pure Off-grid ESS

3.1 Grid-tied ESS

3.1.1 Grid-tied ESS Networking

Networking 1: Inverter + Batteries

The grid-tied ESS consists of the PV strings, LUNA2000 batteries, inverter, AC switch, load, power distribution unit (PDU), and grid.

The SUN2000-(2KTL–6KTL)-L1 or SUN2000-(3KTL–10KTL)-M1 inverters are supported.

The PV string converts solar energy into electric energy, which is then converted by the inverter into power for loads and then fed to the power grid.

Figure 3-1 Grid-tied ESS basic networking diagram

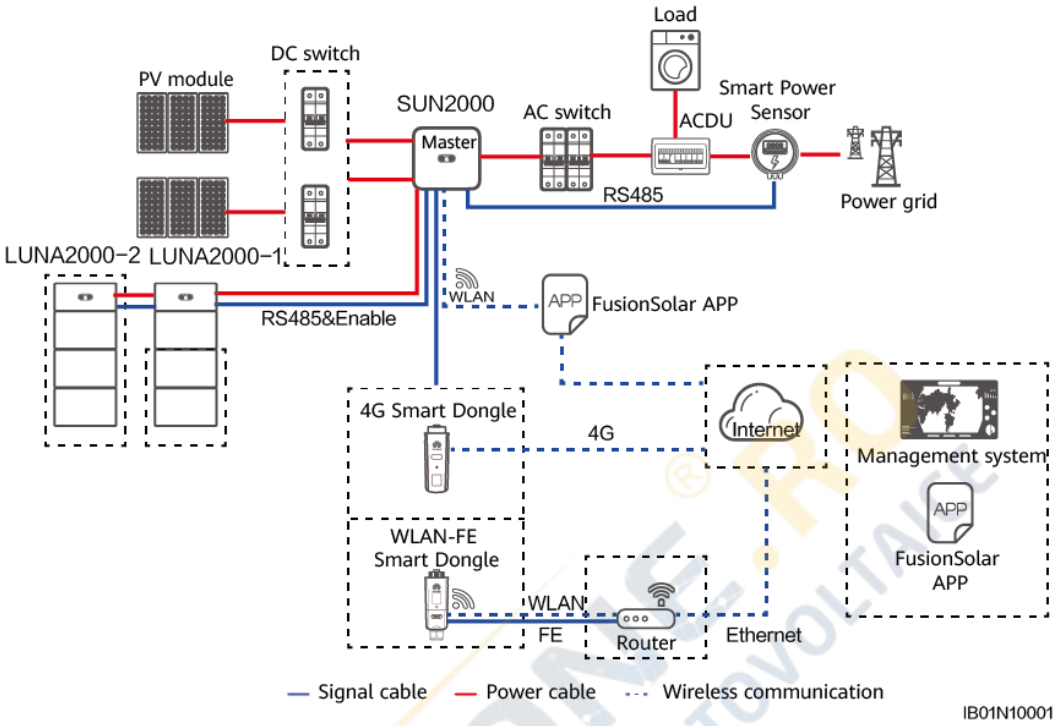

Networking 2: Inverter (with Batteries) + Inverter (Without Batteries)

The grid-tied ESS supports inverter cascading. A maximum of three inverters can be cascaded. One inverter connects to and manages batteries, and the other inverters are used to generate extra energy.

Figure 3-2 Inverter (with batteries) + Inverter (without batteries)

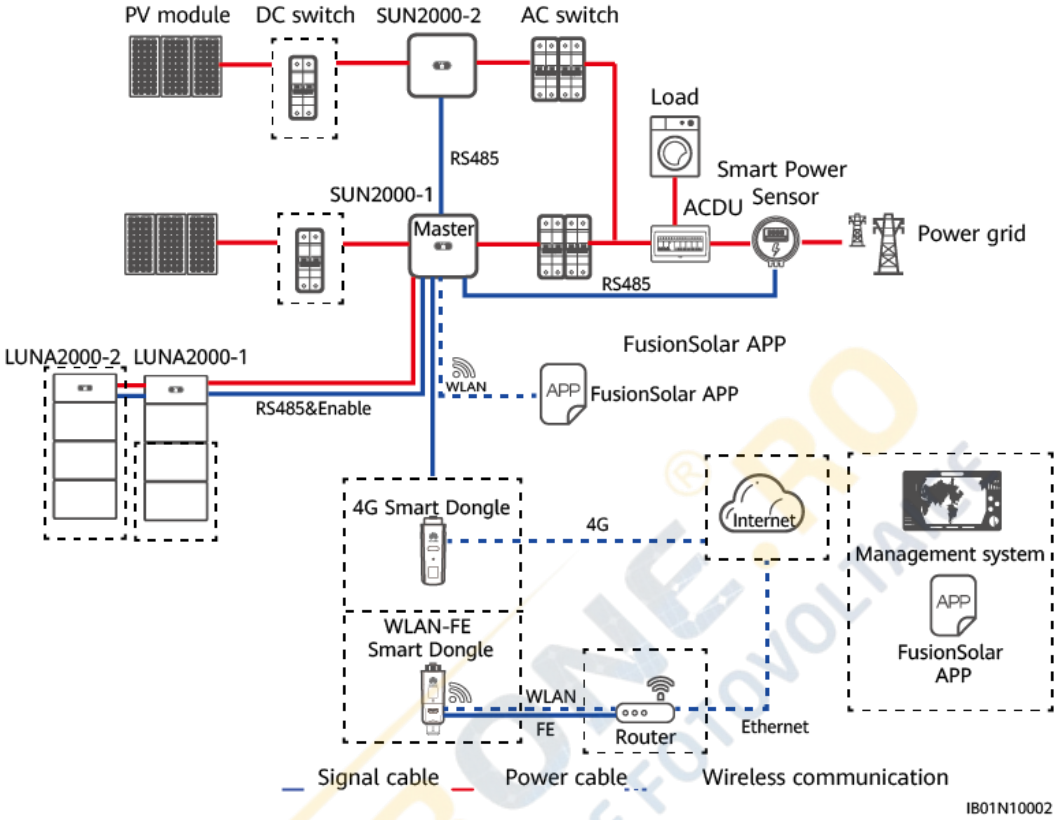

Table 3-1 Mapping relationship

Inverter	SUN2000-1	SUN2000-2
Model	SUN2000-(2KTL–6KTL)-L1/SUN2000-(3KTL–10KTL)-M1	--

Networking 3: Inverter (with Batteries) + Inverter (with Batteries)

When the capacity requirement is high, you can add inverters and batteries. A maximum of three inverters can be cascaded. Each battery connects to the inverter through an independent RS485 port and is managed by the inverter connected to it.

Figure 3-3 Inverter (with batteries) + Inverter (with batteries)

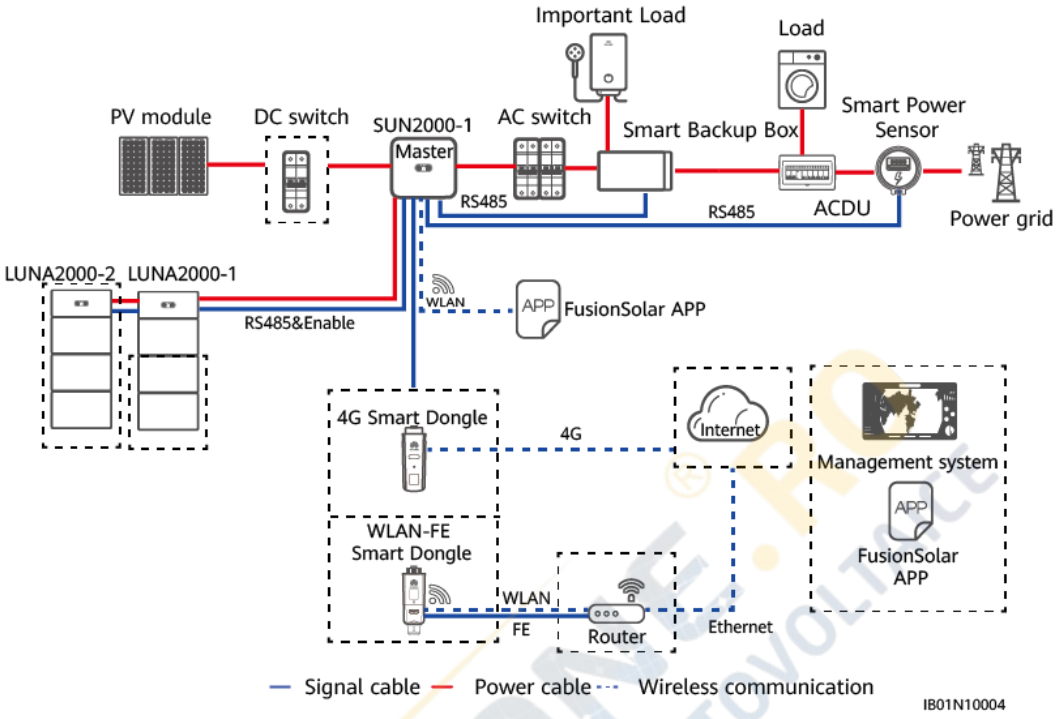

Table 3-2 Mapping relationship

Inverter	SUN2000-1	SUN2000-2
Model	SUN2000-(2KTL–6KTL)-L1/SUN2000-(3KTL–10KTL)-M1	SUN2000-(2KTL–6KTL)-L1/SUN2000-(3KTL–10KTL)-M1

3.1.2 Setting the Grid-tied ESS Mode

The grid-tied ESS has three main working modes: self-consumption, time-of-use, and excess fed to the grid.

Self-Consumption

- This mode applies to areas where the electricity price is high, or areas where the FIT subsidy is low or unavailable.
- Excess PV energy is stored in batteries. When PV power is insufficient or no PV power is generated at night, batteries discharge to supply power to the loads, improving the self-consumption rate of the PV system and the self-sufficiency rate of residential energy, and reducing electricity costs.
- In this mode, **Maximum self-consumption** is selected. By default, the charge cutoff capacity is 100% and the discharge cutoff capacity is 0% for Huawei LUNA2000 batteries. For details about how to change the charge or discharge cutoff capacity, see 6.3 Battery Commissioning.

Figure 3-4 Battery control parameter setting

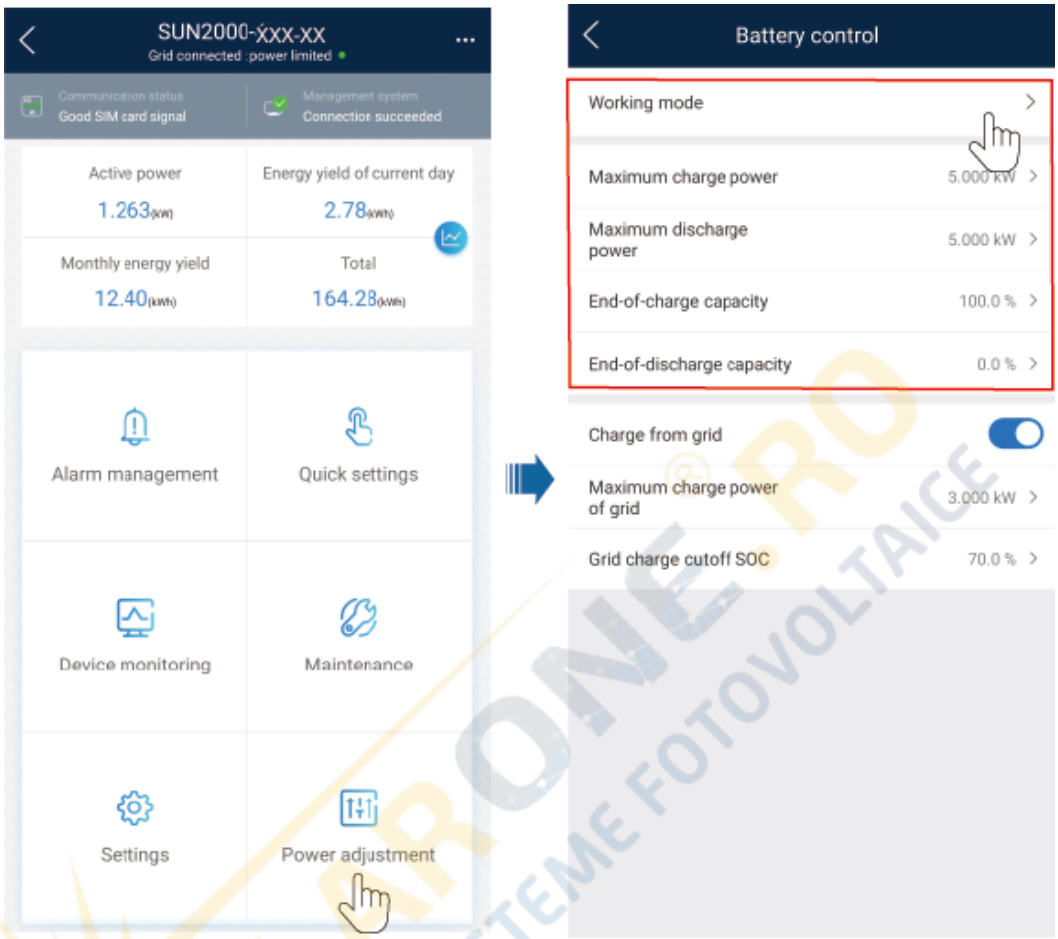

Parameter	Description	Value Range
Working mode	Set this parameter to the maximum self-consumption mode.	• Maximum self-consumption • Time-of-use • Fully fed to grid
Maximum charge power (kW)	Retain this parameter to the maximum charge power. Additional configuration is not required.	• [0, Maximum charge power]
Maximum discharge power (kW)	Retain this parameter to the maximum discharge power. Additional configuration is not required.	• [0, Maximum discharge power]
End-of-charge capacity (%)	Set the charge cutoff capacity.	80%–100%

Copyright © Huawei Technologies Co., Ltd.

Parameter	Description	Value Range
End-of-discharge capacity (%)	Set the discharge cutoff capacity.	0%–20%

Time-of-Use

- This mode applies to scenarios where the price difference between peak and off-peak hours is large.
- In this mode, **Time-of-use** is selected. You can manually set the charge and discharge time segments. For example, you can allow the grid to charge batteries in low electricity price periods at night and discharge batteries during high electricity price periods, saving electricity fee. The charge from grid function must be enabled.
- A maximum of 14 time segments can be set. For details about how to set charge and discharge parameters, see 6.3 Battery Commissioning.
- In some countries, the grid is not allowed to charge batteries. Therefore, this mode cannot be used.
- If the charge time is set but the discharge time is not set, the ESS charges the batteries during the charge period. In other periods, the battery works in self-consumption mode and supplies power to loads.

  If both the charge time and discharge time are set, the ESS charges and discharges batteries during the charge time and supplies power to loads during the discharge time. If no time segment is set, the ESS does not discharge, and the PV modules and power grid supply power to loads.

Figure 3-5 Time-of-use working mode

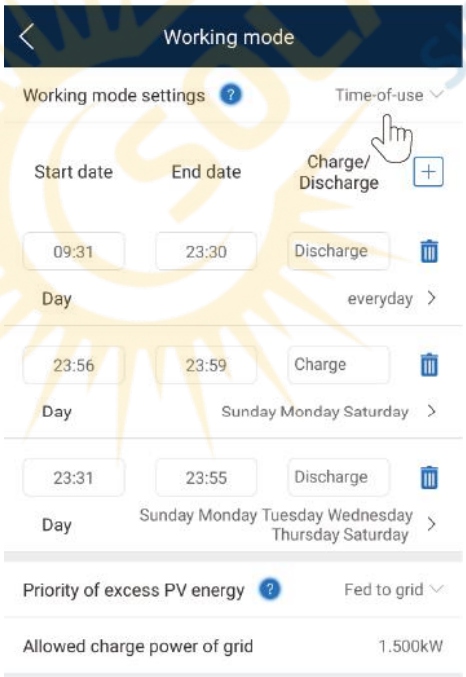

Table 3-3 Time-of-use mode setting

Parameter	Description	Value Range
Priority of excess PV energy	• **Charge**: When the generated PV energy is greater than the loads, excess PV energy is used to charge the batteries. After the maximum charge power is reached or the batteries are fully charged, the excess PV energy is fed to the grid. • **Fed to grid**: When the generated PV energy is greater than the loads, the excess PV energy is preferentially fed to the grid rather than used for battery charging. This setting is applicable to the scenario where the FIT is higher than the electricity price. Batteries are used only for backup power.	• Charge • Fed to grid
Allowed charge power of grid (kW)	Indicates the maximum charge power allowed by the grid. The value is determined by the local grid company. If there is no requirement, the value is the maximum charge power of the ESS by default.	• [0, Maximum charge power allowed by the grid]

Figure 3-6 Battery control parameter setting

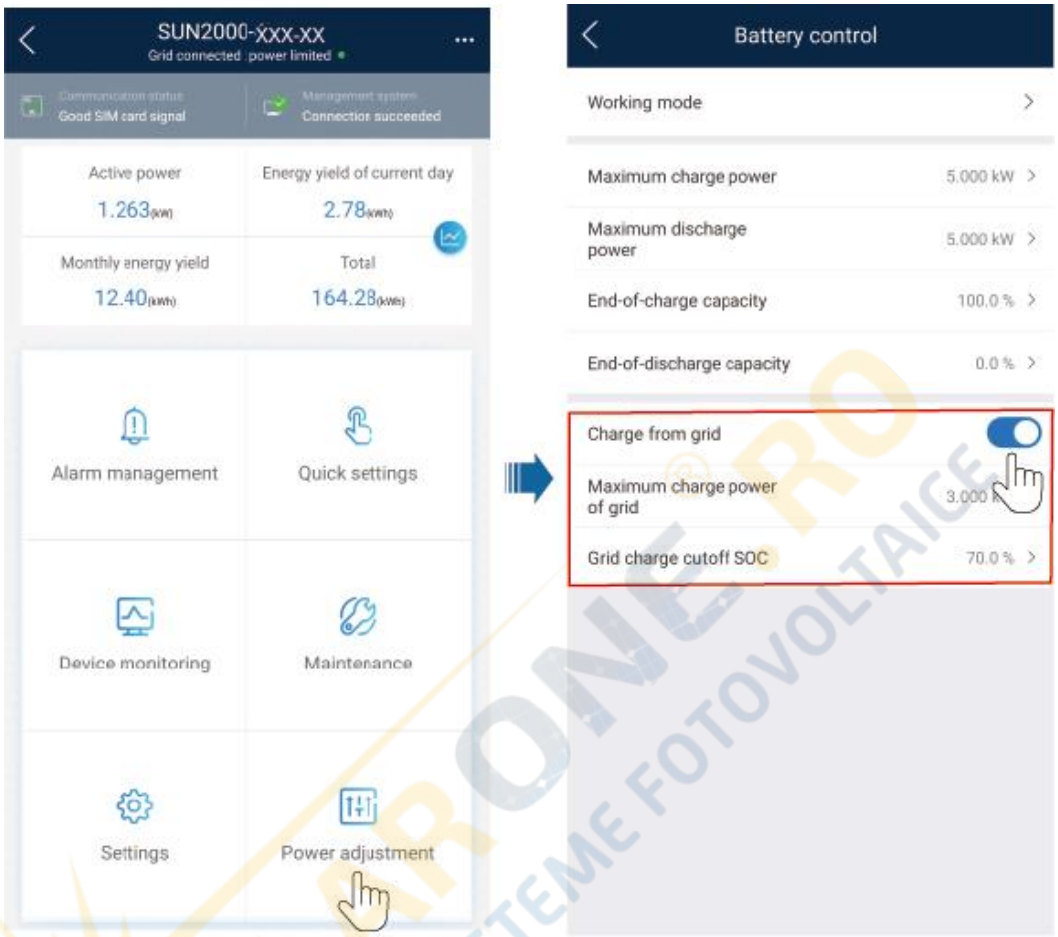

Table 3-4 Time-of-use parameter setting

Parameter	Description	Value Range
Charge from grid	If **Charge from grid** function is disabled by default, comply with the grid charge requirements stipulated in local laws and regulations when this function is enabled.	• Disable • Enable
Grid charge cutoff SOC	Set the grid charge cutoff state of charge (SOC).	[0, 100%]

Fully Fed to Grid

- This mode applies to the grid-tied scenario where PV energy is fully fed to the grid.
- This mode maximizes the PV energy for grid connection. When the generated PV energy in the daytime is greater than the maximum output capability of the inverter, the batteries are charged to store energy. When the PV energy is less than the maximum output capability of the inverter, batteries discharge to maximize the output energy of the inverter to the grid.

- In this mode, **Fully fed to grid** is selected. For details, see 6.3 Battery Commissioning.

3.2 Grid-tied and Off-grid ESS

The grid-tied and off-grid ESS is mainly used to supply power to loads when the grid is unstable and there are primary loads. The grid-tied and off-grid ESS switches the inverter to the grid-tied or off-grid state through the Backup Box. When the grid fails, the inverter switches to the off-grid state and supplies power to primary loads in backup mode. When the grid recovers, the inverter switches back to the grid-tied state.

3.2.1 Grid-tied and Off-grid ESS Networking

Networking 1: Inverter + Batteries

The grid-tied and off-grid ESS consists of the PV strings, LUNA2000 batteries, inverter, AC switch, load, Backup Box, PDU, and grid. The grid connection status of the inverter is switched by using the Backup Box.

Figure 3-7 Grid-tied and off-grid ESS basic networking diagram

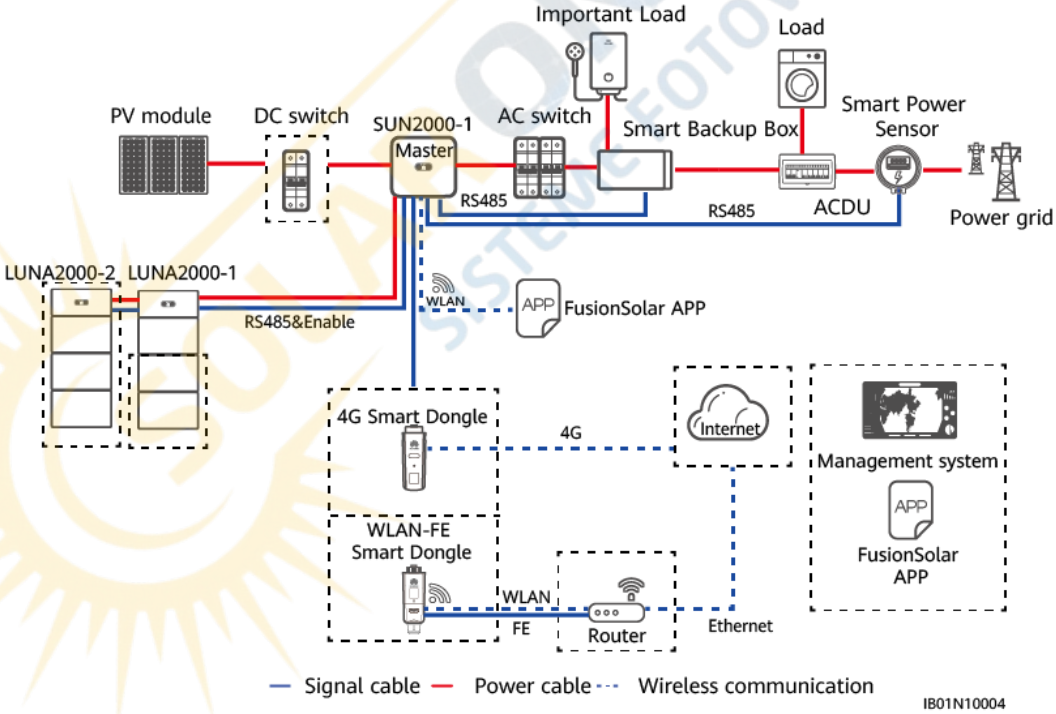

Networking 2: Inverter (with Batteries) + Inverter (Without Batteries)

The grid-tied and off-grid ESS supports inverter cascading. One inverter connects to and manages batteries, and the other inverter is used to generate extra energy. The Backup Box can be connected to only one inverter.

Copyright © Huawei Technologies Co., Ltd.

Figure 3-8 Inverter (with batteries) + Inverter (without batteries)

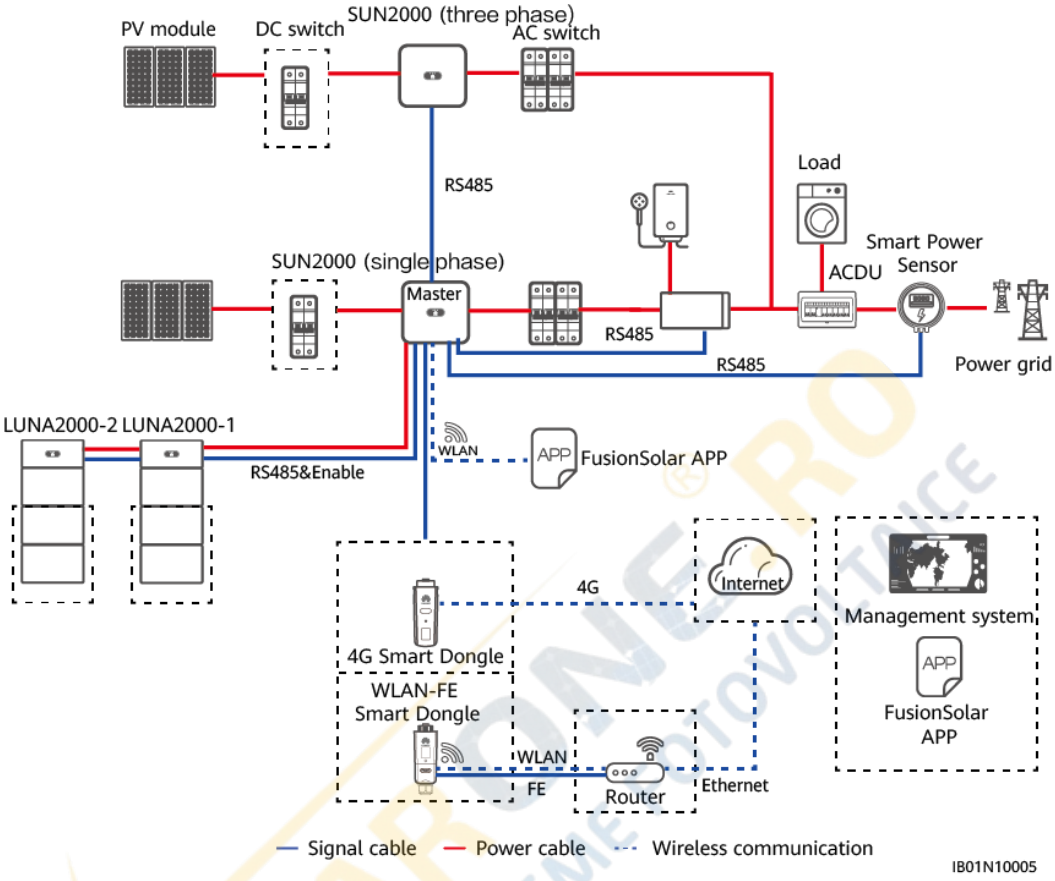

WARNING

When the inverter switches to the off-grid state, different output primary loads of the Backup Box cannot be connected in parallel due to different output phases of off-grid inverters. Therefore, the primary loads must be connected to different buses.

3.2.2 Setting the Grid-tied and Off-grid ESS Mode

The grid-tied and off-grid ESS switches the inverter to the grid connection status through the Backup Box. When the grid fails, the ESS supplies power to primary loads in backup mode.

- This mode can be used together with the self-consumption or time-of-use mode.
  - When the grid is normal, the self-consumption or time-of-use mode is used.
  - After the grid fails, the ESS switches to the power backup mode. The battery backup time depends on the battery SOC when the grid fails. (The battery SOC for power backup can be set based on customer requirements.)

Enabling Off-grid Mode

On the home screen, choose **Settings** > **Feature parameters** and enable **Off-grid mode**.

Figure 3-9 Backup power setting

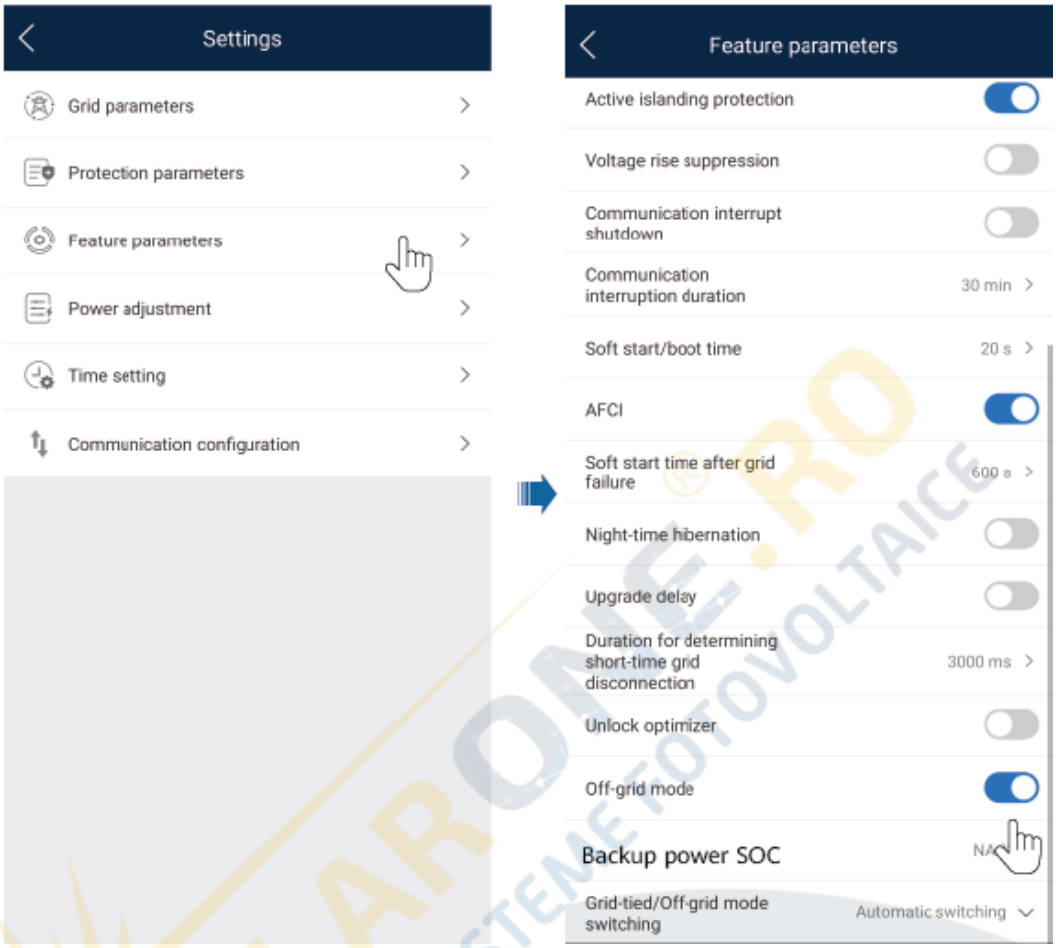

Table 3-5 Grid-tied and off-grid parameter setting

Parameter	Description	Value Range
Off-grid mode	Enable the off-grid mode. When the grid fails, the ESS switches the inverter to the off-grid mode through the Backup Box.	• Enable • Disable
Backup power SOC	When **Off-grid mode** is enabled, you can set the backup power SOC. The battery stops discharging when it is discharged to the backup power SOC. When the grid fails, loads are powered in backup mode.	[0, 50%]
Grid-tied/Off-grid mode switching	Set the grid-tied/off-grid switching mode. When the mode is set to **Automatic switching**, if the grid fails, the inverter is switched to off-grid mode. If the grid recovers, the inverter is switched to grid-tied mode.	• Automatic switching • Manual switching

Copyright © Huawei Technologies Co., Ltd.

Setting a Working Mode

The grid-tied and off-grid ESS mode can be used together with the self-consumption or time-of-use mode. Enable **Off-grid mode** during site deployment. For details about how to set the self-consumption or time-of-use mode, see 3.1.2 Setting the Grid-tied ESS Mode.

3.3 Pure Off-grid ESS

The pure off-grid ESS is mainly used in the scenario where there is no grid and the system operates in pure off-grid mode. The pure off-grid ESS stores the generated PV energy in batteries and supplies power to loads when the PV energy is insufficient or there is no PV energy at night.

3.3.1 Pure Off-grid ESS Networking

The pure off-grid ESS consists of the PV strings, LUNA2000 batteries, inverter, AC switch, and load.

The pure off-grid ESS supports only a single inverter and does not support parallel connection of inverters.

Figure 3-10 Pure off-grid ESS

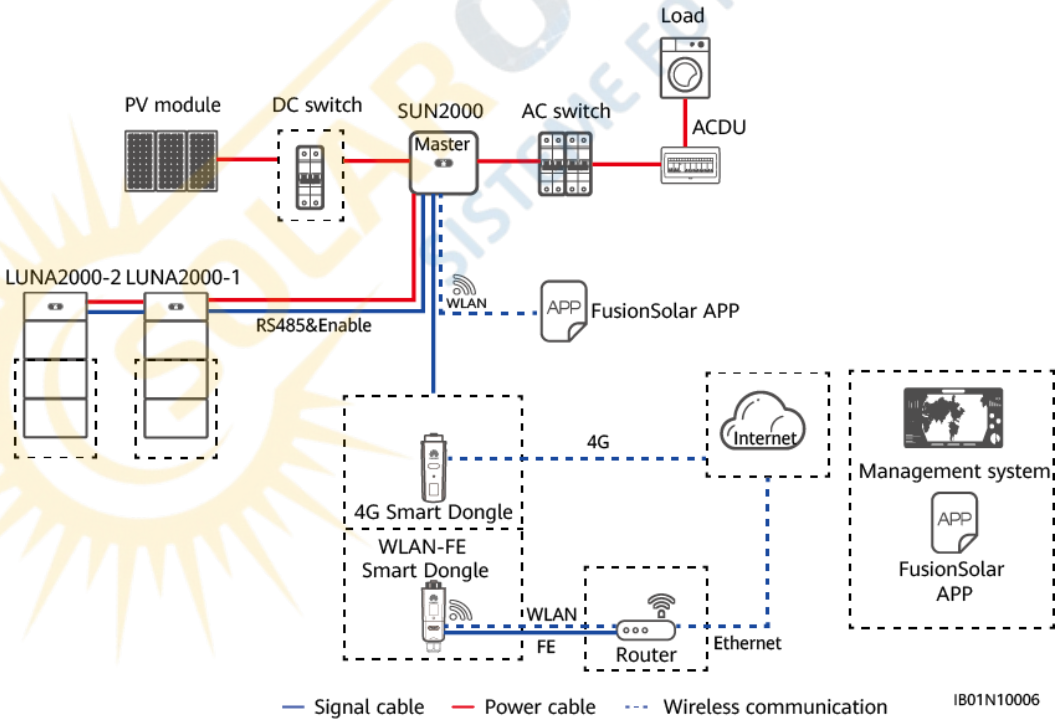

3.3.2 Setting the Pure Off-grid ESS Mode

The inverter works in off-grid mode. When the sunlight is sufficient, the ESS supplies power to loads and stores excess PV energy in batteries. When the sunlight is insufficient or there is no sunlight, batteries discharge to supply power to loads. By default, the charge cutoff capacity of Huawei LUNA2000 batteries is 100% and the discharge cutoff capacity is 0%. For

details about how to change the charge or discharge cutoff capacity, see 6.3 Battery Commissioning.

Figure 3-11 Battery control parameter setting

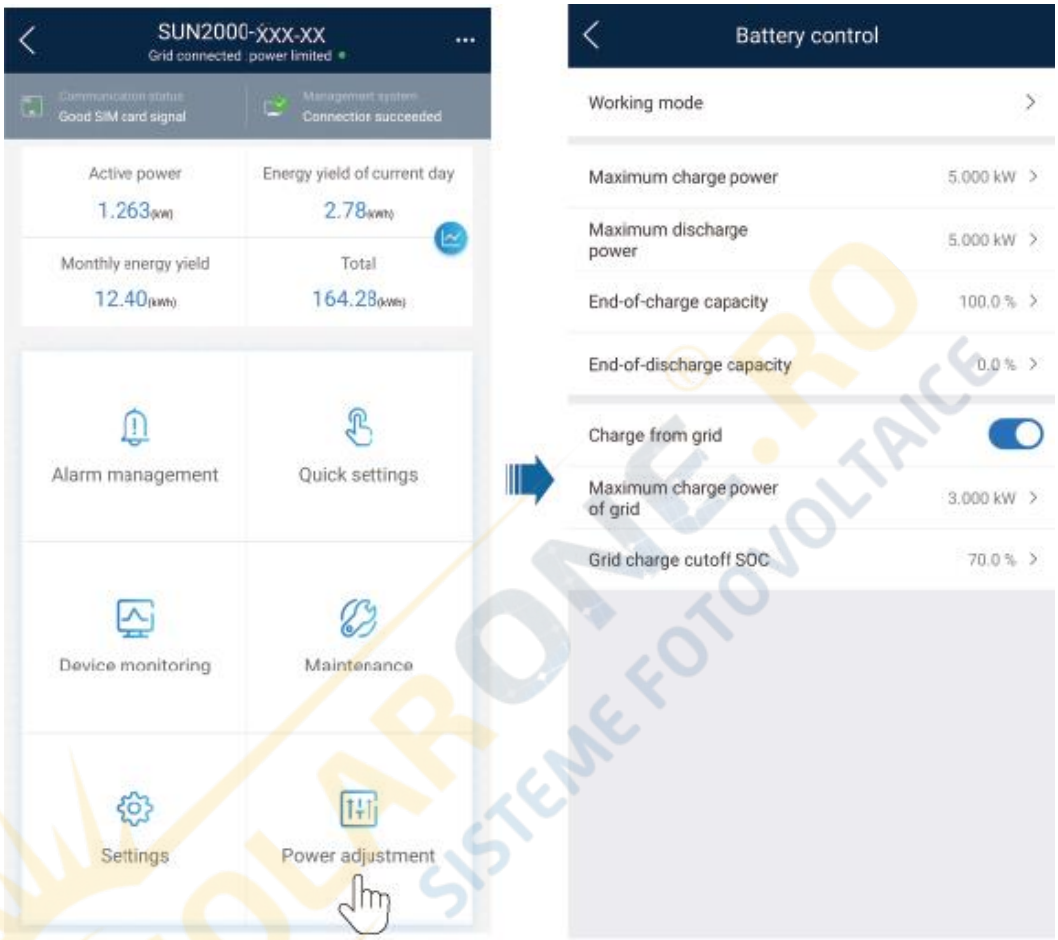

4 System Installation

4.1 Checking Before the Installation
4.2 Preparing Tools and Instruments
4.3 Determining the Installation Position
4.4 Equipment Installation

4.1 Checking Before the Installation

Checking the Outer Packing

Before unpacking the battery, check the outer packing for damage, such as holes and cracks, and check the battery model. If any damage is found or the battery model is not what you requested, do not unpack the product and contact your dealer as soon as possible.

Checking Deliverables

After unpacking the battery, check that the deliverables are intact and complete, and free from any obvious damage. If any item is missing or damaged, contact your dealer.

NOTE

For details about the number of deliverables delivered with the battery, see the *Packing List* in the packing case.

4.2 Preparing Tools and Instruments

Type	Tools and Instruments		
Installation	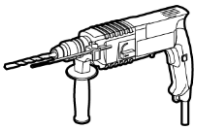	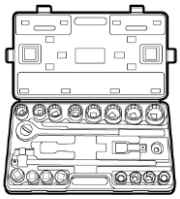	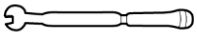

 Copyright © Huawei Technologies Co., Ltd.

Type	Tools and Instruments		
	Hammer drill (with a drill bit of 8 mm)	Torque socket wrench	Torque wrench
	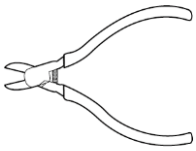 Diagonal pliers	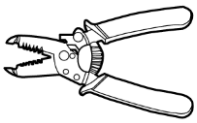 Wire strippers	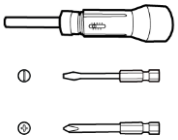 Torque screwdriver
	Rubber mallet	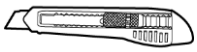 Utility knife	Cable cutter
	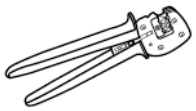 Crimping tool (model: PV-CZM-22100)	Cord end terminal crimper	Disassembly and Assembly Tool (model: PV-MS-HZ open-end wrench)
	Cable tie	Vacuum cleaner	Multimeter (DC voltage measurement range ≥ 600 V DC)
	Marker	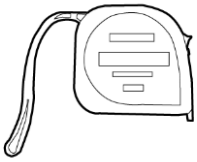 Steel measuring tape	Level
	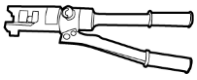	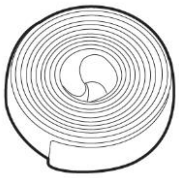	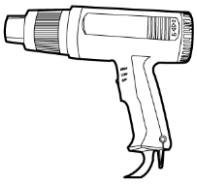

Copyright © Huawei Technologies Co., Ltd.

Type	Tools and Instruments		
	Hydraulic pliers	Heat-shrink tubing	Heat gun
Personal protective equipment (PPE)	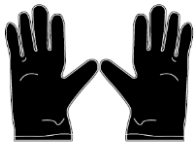 Safety gloves	Safety goggles	Anti-dust mask
	Safety boots	-	-

4.3 Determining the Installation Position

Basic Requirements

- Do not install the battery in a position where it is easy to touch because the temperature of the chassis and heat sink is high when the battery is running.
- Do not install the battery in areas with flammable or explosive materials.
- Do not install the battery outdoors in salt-affected areas because it may corrode and cause fires. A salt-affected area refers to the region within 500 meters from the coast or prone to sea breeze. The regions prone to sea breeze vary with weather conditions (such as typhoons and monsoons) or terrains (such as dams and hills).
- Do not install the battery in a position where children can touch it.

Installation Environment Requirements

- Install the battery in a dry and well-ventilated environment to ensure good heat dissipation.
- You are advised to install the battery in a sheltered place or install an awning over it.
- Install the battery in a clean environment that is free from sources of strong infrared radiation, organic solvents, and corrosive gases. Avoid exposing the battery to sunlight or water.
- The installation position must be far away from fire sources.
- The installation position must be far away from water sources such as taps, sewer pipes, and sprinklers to prevent water seepage.
- The equipment must be placed on a solid and flat supporting surface.
- Do not place any flammable or explosive materials around the equipment.
- To prevent fire due to high temperature, ensure that the ventilation vents or heat dissipation system are not blocked when the equipment is running.

 Copyright © Huawei Technologies Co., Ltd.

- Do not expose the equipment to flammable or explosive gas or smoke. Do not perform any operation on the equipment in such environments.

Installation Angle Requirement

The battery can be floor-mounted and wall-mounted. The installation angle requirement is as follow:

- Do not install the battery at forward tilted, back tilted, side tilted, horizontal, or upside down positions.

Installation Space Requirements

- Reserve sufficient clearance around the battery to ensure sufficient space for installation and heat dissipation.

Figure 4-1 Installation space

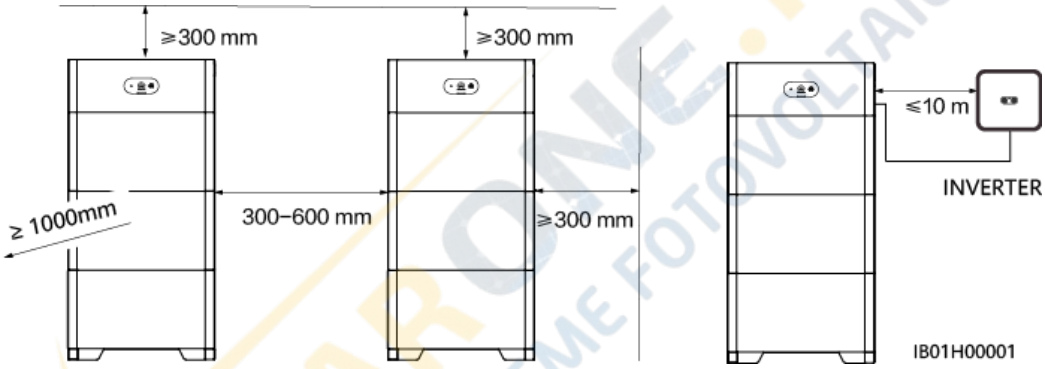

4.4 Equipment Installation

4.4.1 Floor-Mounted Installation

Installation Precautions

Figure 4-2 shows the dimensions of mounting holes for a battery.

Figure 4-2 Floor-mounted installation dimensions

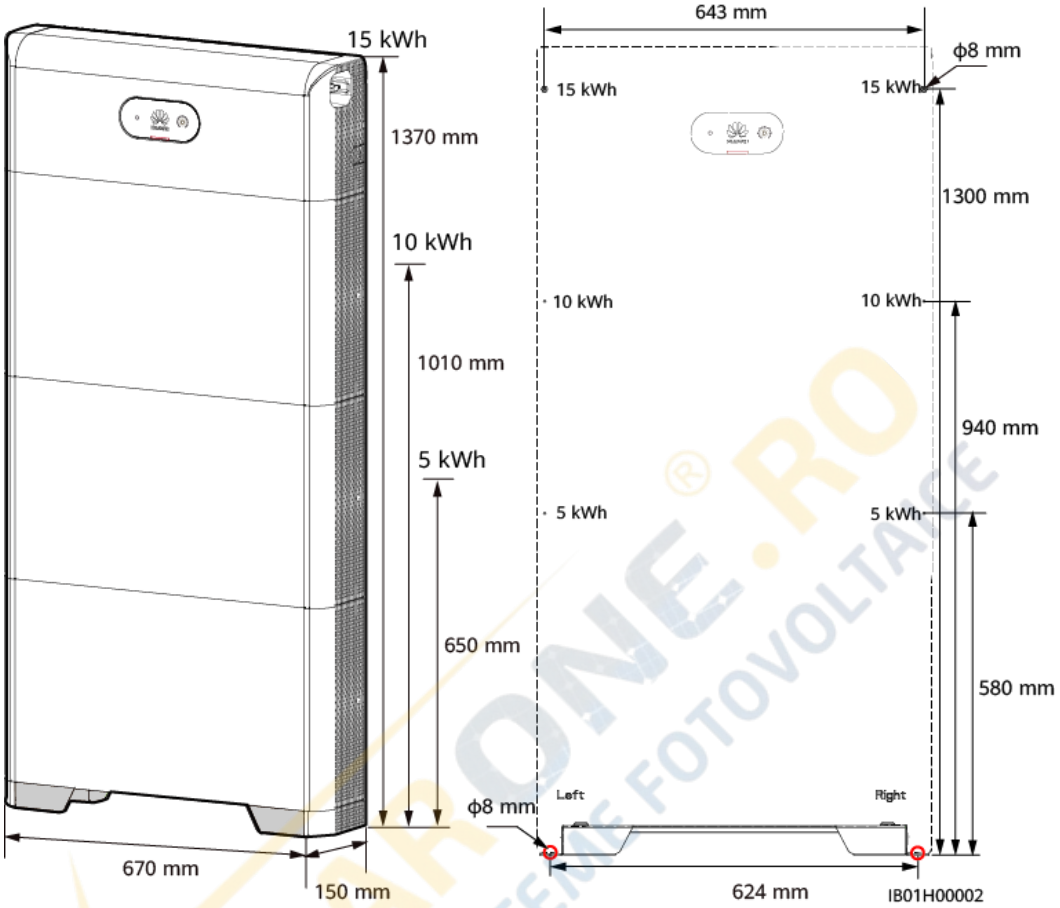

Procedure

Step 1 Align the floor support with the wall surface and keep the support 10 mm to 15 mm away from the wall surface. Level the hole positions using a level, and mark the hole positions for installing the floor support using a marker. Align the marking-off template with the surface of the floor mounting kit, determine the drilling hole positions on the wall for securing the power control module, and mark the positions using a marker.

Step 2 Install the floor support.

DANGER

When drilling holes, avoid the water pipes and power cables buried in the wall.

NOTE

M6x60 expansion bolts delivered with the battery are used to install the floor support and power control module. If the length and quantity of the bolts do not meet installation requirements, prepare M6 stainless steel expansion bolts by yourself.

Figure 4-3 M6 expansion bolt composition

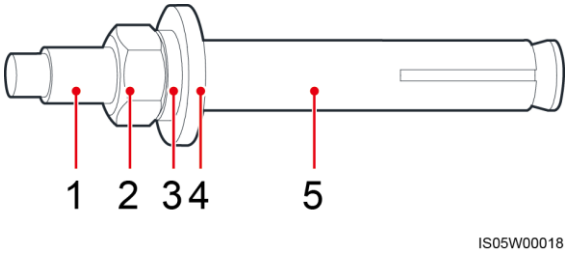

(1) Bolt (2) Nut (3) Spring washer

(4) Flat washer (5) Expansion sleeve

SOLARONE.RO SISTEME FOTOVOLTAICE

NOTICE

- To prevent dust inhalation or contact with eyes, wear safety goggles and an anti-dust mask when drilling holes.
- Wipe away any dust in or around the holes and measure the hole distances. If the holes are inaccurately positioned, drill holes again.
- Level the head of the expansion sleeve with the concrete wall or floor after removing the nut, spring washer, and flat washer. Otherwise, the mounting kit will not be securely installed on the wall or ground.
- Loosen the nut, spring washer, and flat washer of the expansion bolt at the bottom.

Figure 4-4 Installing expansion bolts

SOLARONE.RO® SISTEME FOTOVOLTAICE

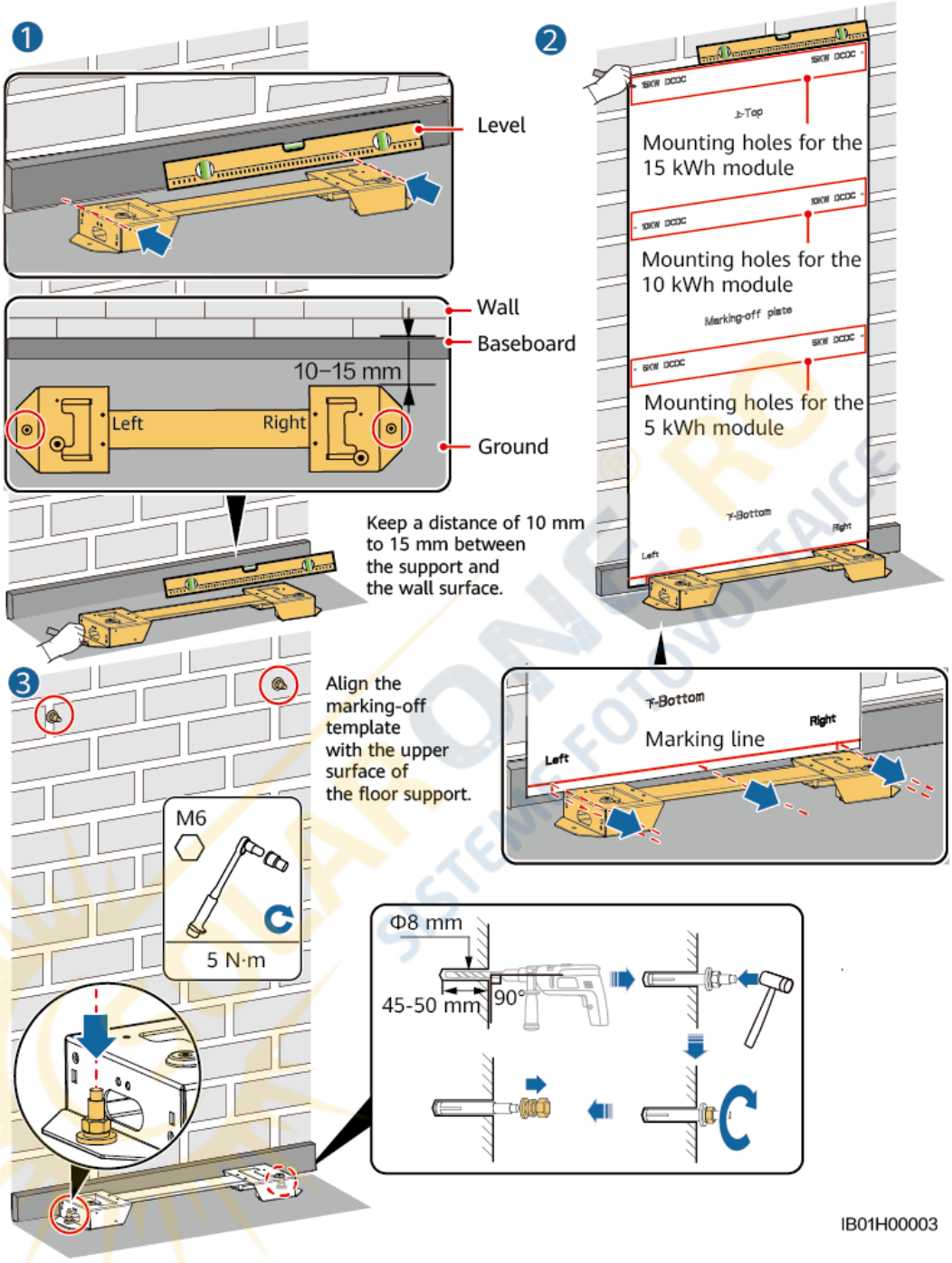

Step 3 Place the first battery module on the floor support, install the connecting pieces on both sides, and tighten the four screws. Install the remaining battery expansion modules and power control module from bottom to top.

 Copyright © Huawei Technologies Co., Ltd.

WARNING

After installing a module, install and tighten the connecting pieces and screws on the left and right sides of the module, and then install the next module.

Figure 4-5 Installing the battery expansion modules and power control module

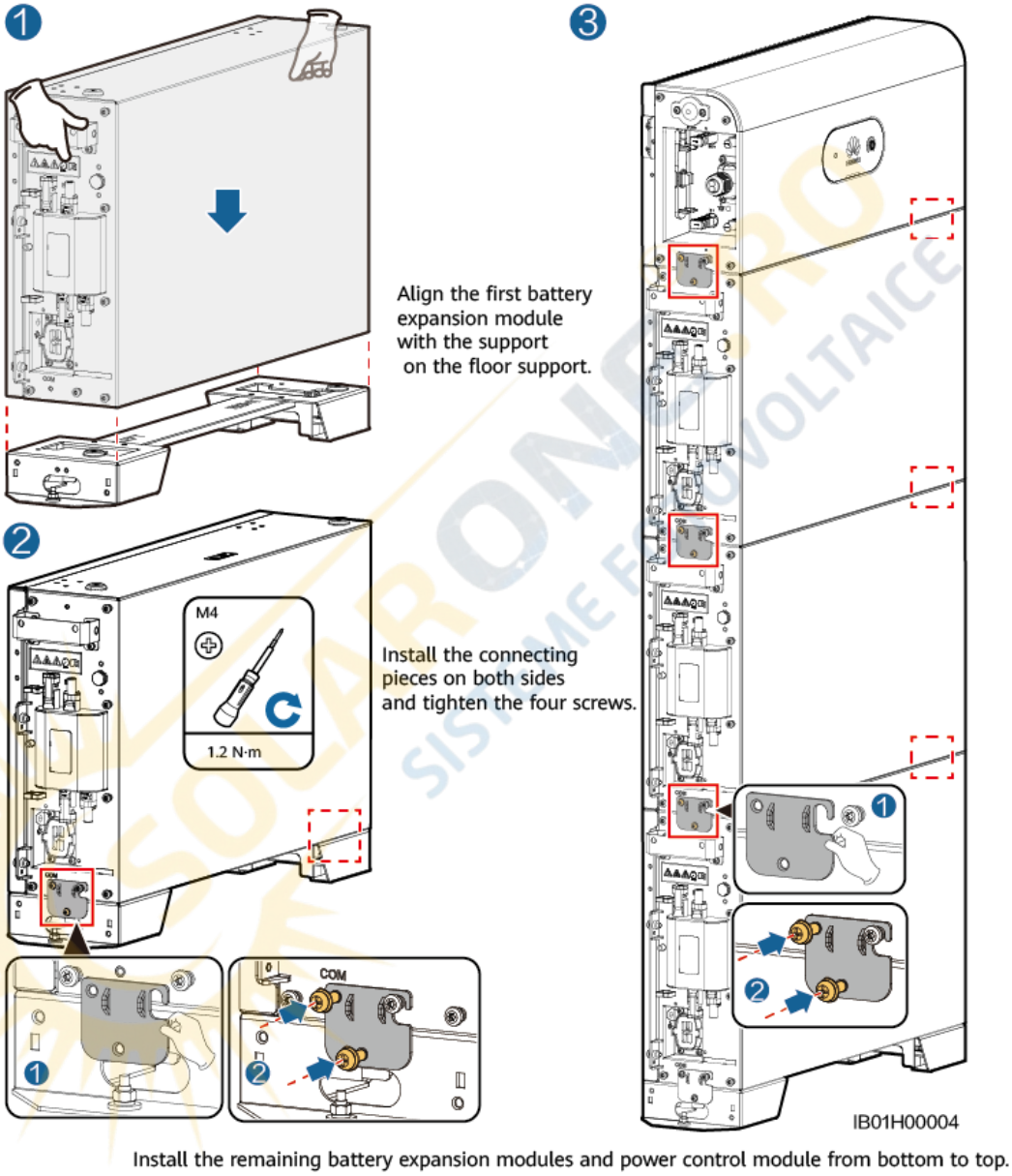

Step 4 Secure the power control module to the wall.

WARNING

The power control module must be fixed on the wall to prevent it from falling down.

Copyright © Huawei Technologies Co., Ltd.

Figure 4-6 Securing the power control module

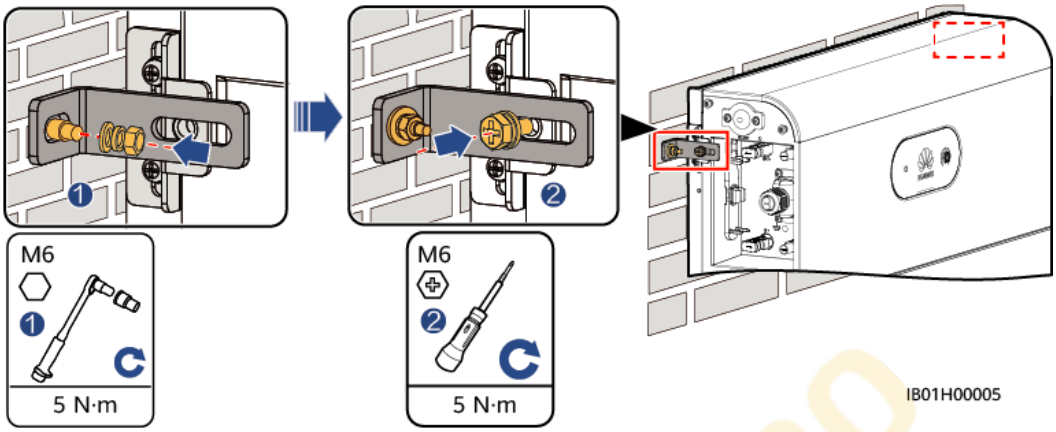

----End

4.4.2 Wall-Mounted Installation

Installation Precautions

Figure 4-7 shows the dimensions of mounting holes for the battery on the wall.

Figure 4-7 Wall-mounted installation dimensions

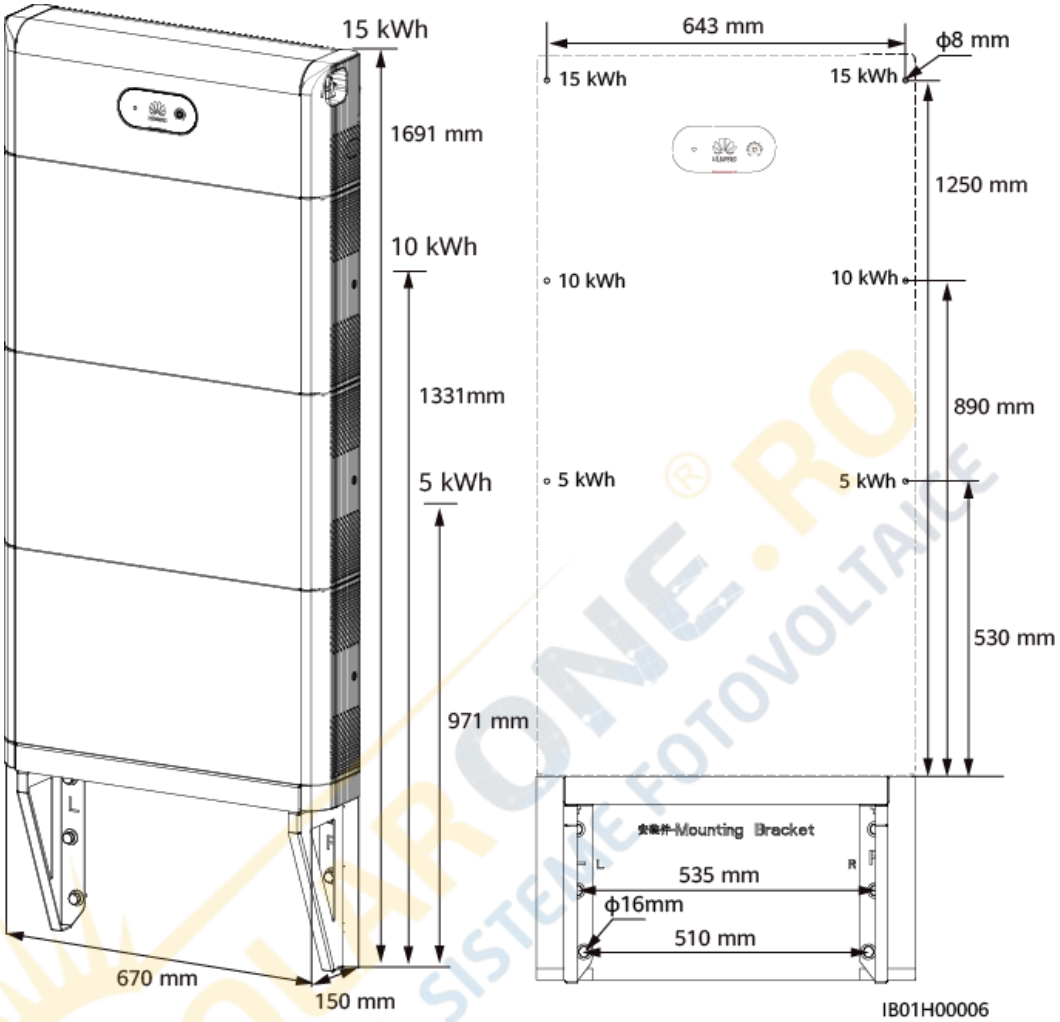

Procedure

Step 1 Determine the positions for drilling holes using the marking-off template. Level the positions of mounting holes using a level, and mark the positions with a marker.

Step 2 Install the mounting kit.

DANGER

When drilling holes, avoid the water pipes and power cables buried in the wall.

NOTE

M12x60 expansion bolts delivered with the battery are used to fix the wall mounting support. If the length and quantity of the bolts do not meet installation requirements, prepare M12 stainless steel expansion bolts by yourself.

M6x60 expansion bolts delivered with the battery are used to fix the power control module. If the length and quantity of the bolts do not meet installation requirements, prepare M6 stainless steel expansion bolts by yourself.

Figure 4-8 Wall-mounted installation

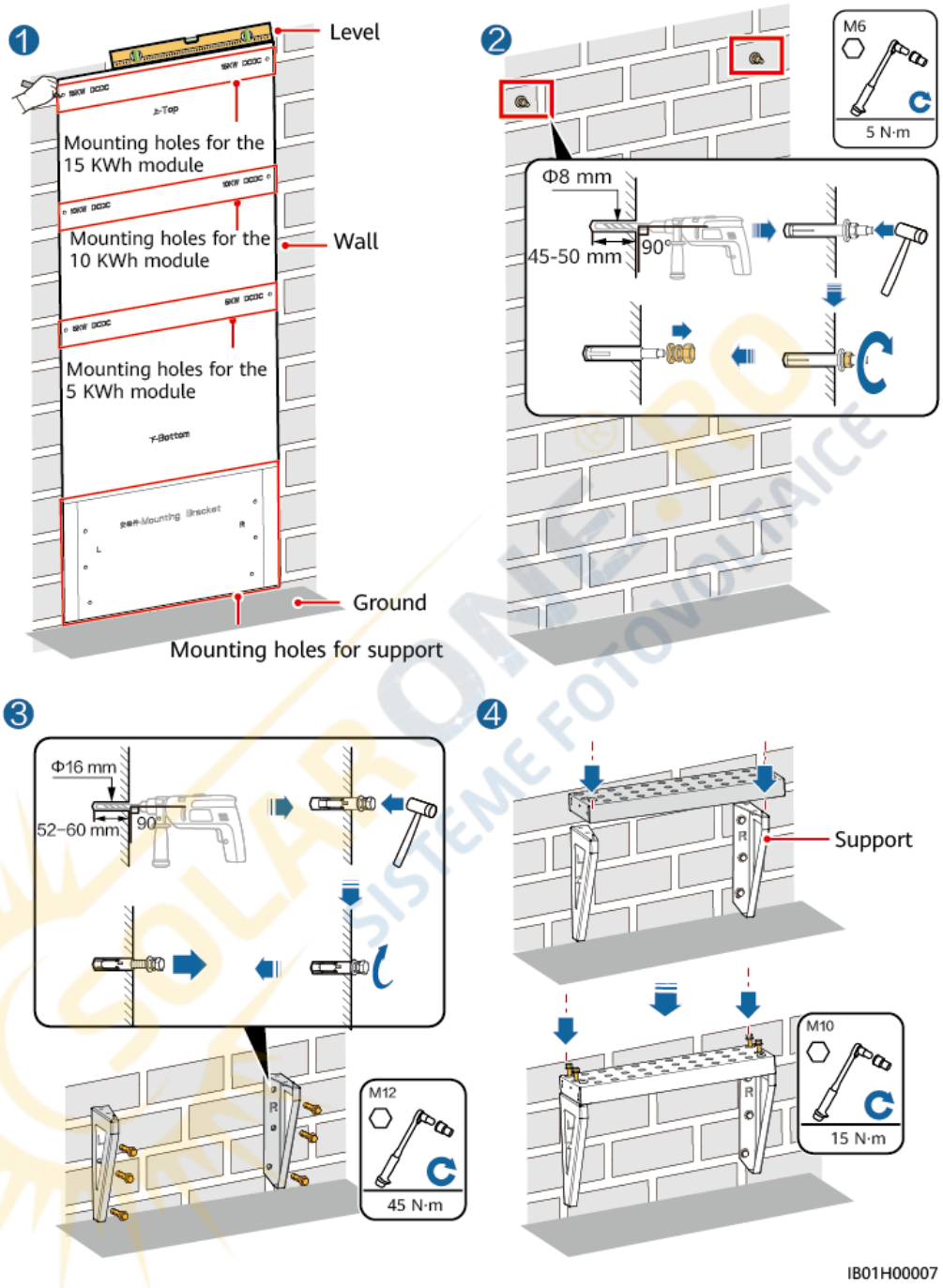

Step 3 Place the first battery expansion module on the wall-mounted support, install the left and right connective pieces, and install the second battery expansion module, third battery expansion module, and power control module from bottom to top.

WARNING

After installing a module, install and tighten the connecting pieces and screws on the left and right sides of the module, and then install the next module.

Step 4 Secure the power control module to the wall.

WARNING

The power control module must be fixed on the wall to prevent the battery from falling down.

Figure 4-9 Securing the power control module

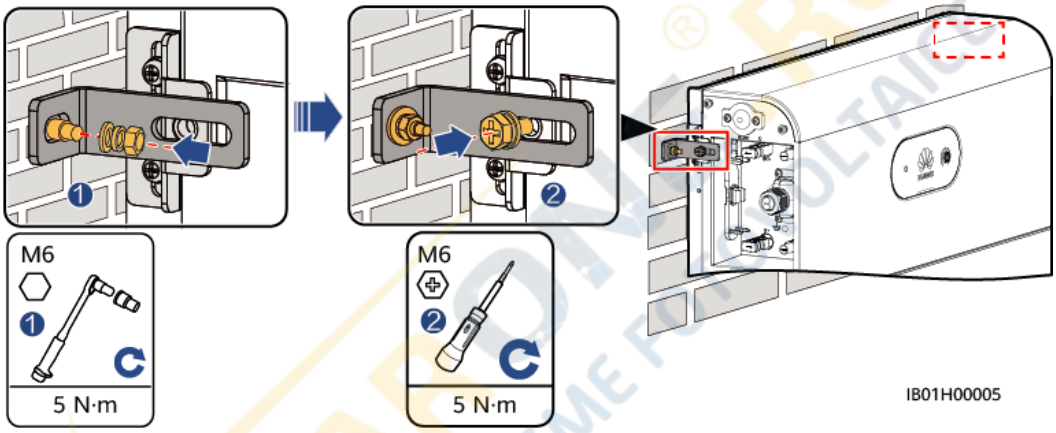

----End

5 Electrical Connection

Precautions

DANGER

Before connecting cables, ensure that the DC switch on the battery and all the switches connected to the battery are set to OFF. Otherwise, the high voltage of the battery may result in electric shocks.

WARNING

- The equipment damage caused by incorrect cable connections is not covered under any warranty.
- Only certified electricians are allowed to connect cables.
- Operation personnel must wear proper PPE when connecting cables.

NOTE

The cable colors shown in the electrical connection diagrams provided in this chapter are for reference only. Select cables in accordance with local cable specifications (green-and-yellow cables are only used for PE).

5.1 Preparing Cables

5.2 Internal Electrical Connections of the Battery

5.3 External Electrical Connections of the Battery

5.4 (Optional) Cascading Batteries

5.5 Installing the Cover

 Copyright © Huawei Technologies Co., Ltd.

5.1 Preparing Cables

Figure 5-1 Battery cable connections

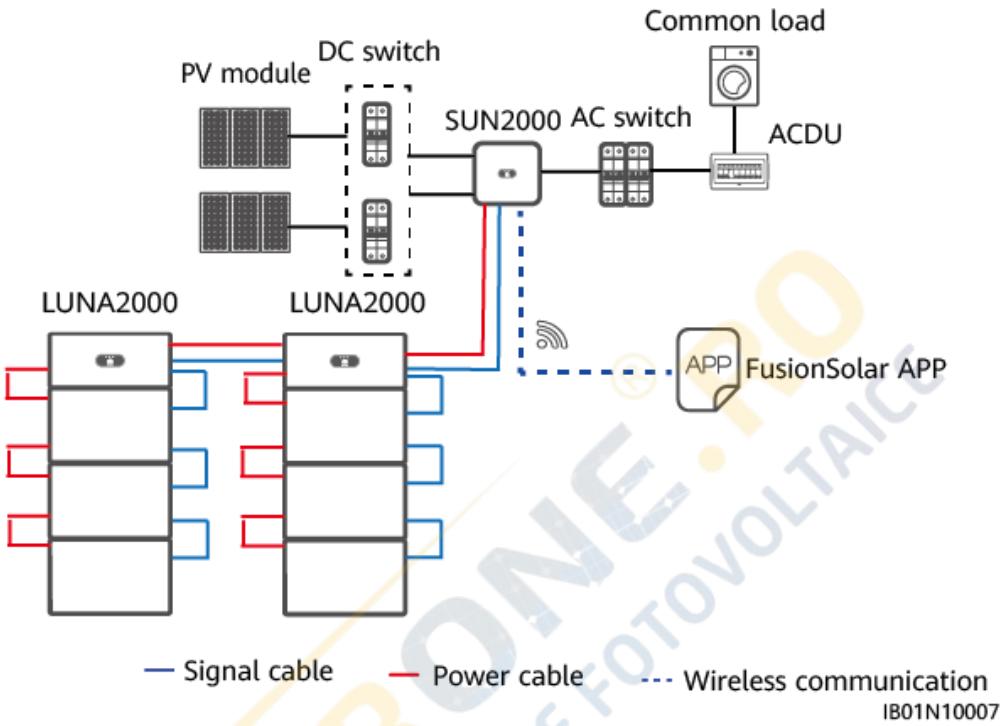

Table 5-1 Cables prepared by the customer

No.	Cable	Type	Recommended Specifications	Source
1	DC input power cable (inverter to battery and battery to battery)	Common outdoor PV cable in the industry	• Conductor cross-sectional area: 4 –6 mm^2 • Cable outer diameter: 5.5–9 mm	Prepared by the customer
2	Signal cable (inverter to battery and battery to battery)	Outdoor shielded twisted pair cable (8 cores)	• Conductor cross-sectional area: 0.20–0.35 mm^2 • Cable outer diameter: 6.2–7 mm	Prepared by the customer
3	Ground cable	Single-core outdoor copper cable	• 10mm^2	Prepared by the customer

Copyright © Huawei Technologies Co., Ltd.

Table 5-2 Cables delivered with the battery

No.	Cable	Type	Source
1	DC input power cable (power control module to battery expansion module)	Common outdoor PV cable in the industry	Delivered with the product
2	Signal cable (power control module to battery expansion module)	Outdoor shielded twisted pair cable	Delivered with the product
3	Ground cable	Single-core outdoor copper cable	Delivered with the product

NOTE

- The minimum cable diameter must comply with local cable standards.
- The factors that affect cable selection include the rated current, cable type, routing mode, ambient temperature, and maximum expected line loss.

5.2 Internal Electrical Connections of the Battery

NOTE

- Internal cables are delivered with the battery. For details, see the *Packing List* in the packing case.

5.2.1 Installing an Internal Ground Cable

Precautions

DANGER

- Ensure that the PE cable is securely connected. Otherwise, electric shocks may occur.

NOTE

- It is recommended that silica gel or paint be used around the ground terminal after the PE cable is connected.

Step 1 Connect the PE cable to the battery power control modules and battery expansion modules.

Figure 5-2 Connecting the internal PE cable

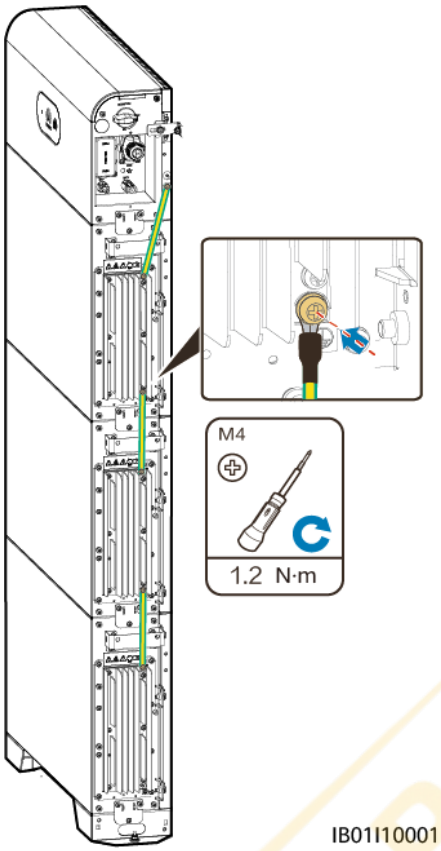

----End

5.2.2 Installing Internal DC Terminals

Step 1 Insert the positive and negative connectors delivered with the battery into the positive and negative battery cascading terminals (B+ and B–).

Figure 5-3 DC power cable connection inside the battery

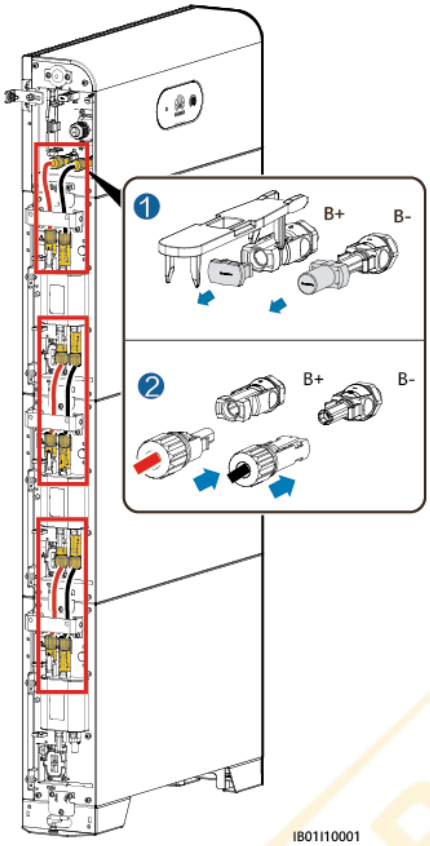

NOTE

The DC terminals between the power control module and the battery expansion modules use the DC connection cable (Amphenol terminal) delivered with the battery.

NOTICE

After the positive and negative connectors snap into place, pull the DC input power cables back to ensure that they are connected securely.

----End

5.2.3 Connecting Internal Signal Cables

Connecting Signal Cables Between the Power Control Module and Battery Expansion Modules

Connect the communications terminals of the power control module and battery expansion modules in sequence and secure them using cable clips.

Figure 5-4 Signal cable connections between the power module and battery modules

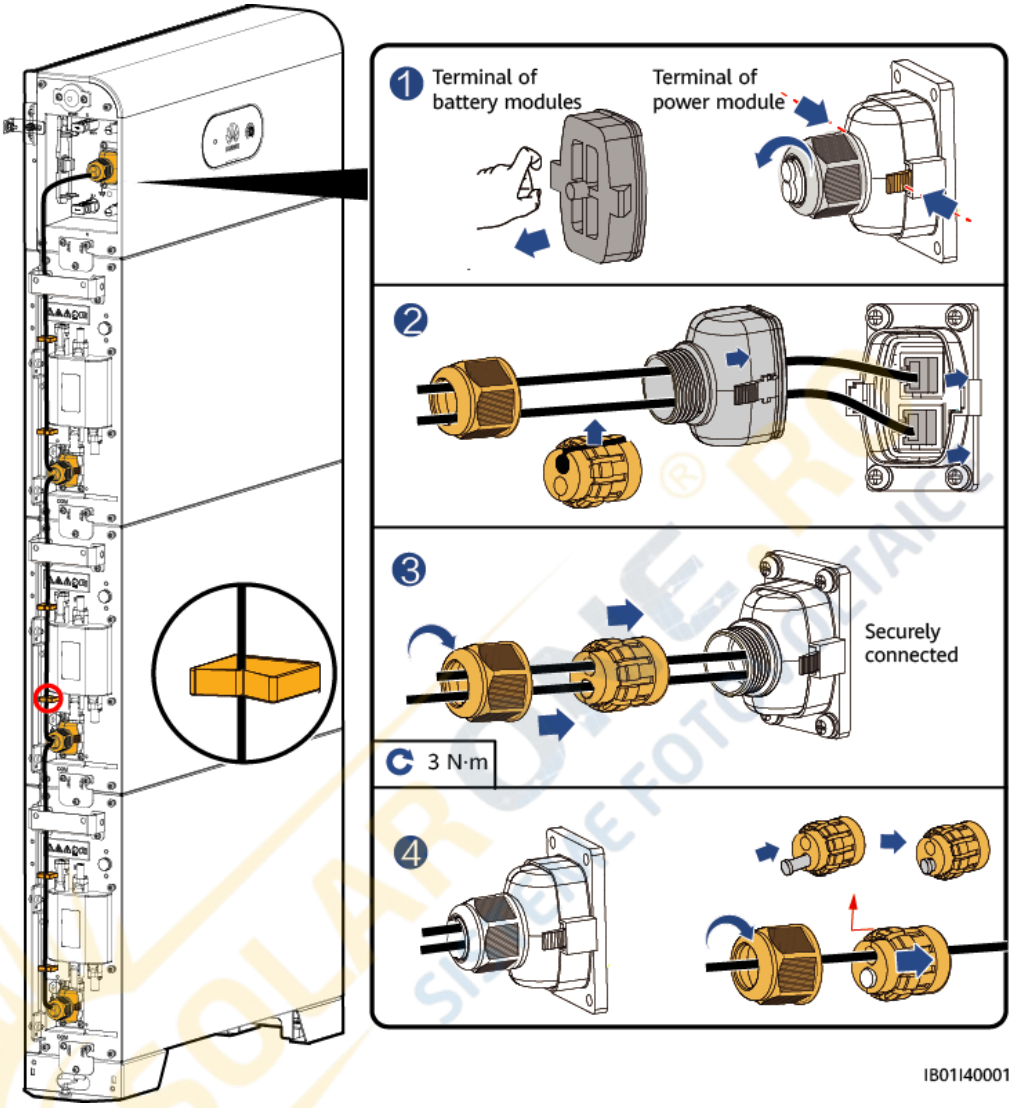

NOTE

When a communications terminal is connected to a single network cable, a waterproof rubber plug must be installed.

5.3 External Electrical Connections of the Battery

Routing Cables Out of the Cable Hole

Cut a cable hole based on the cabling mode, and route external cables through the cable hole.

Figure 5-5 Routing cables out of the cable hole

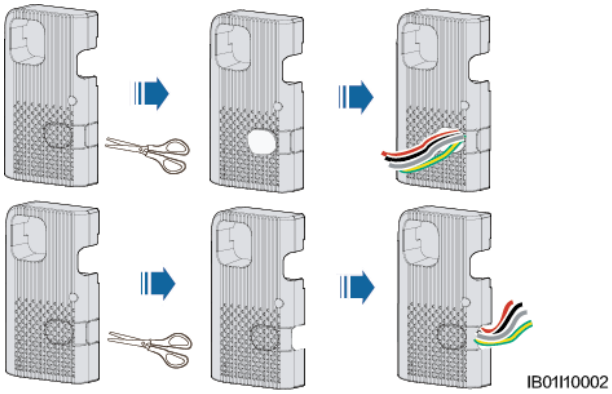

NOTICE

Before connecting external cables, route the cables through the cable hole to avoid disconnecting after installation.

5.3.1 Installing a PE Cable

Precautions

DANGER

- Ensure that the PE cable is securely connected. Otherwise, electric shocks may occur.

NOTE

- It is recommended that silica gel or paint be used around the ground terminal after the PE cable is connected.

Procedure

Step 1 Crimp an OT terminal.

NOTICE

- Avoid scratching the core wire when stripping a cable.
- The cavity formed after the conductor crimp strip of the OT terminal is crimped must wrap the core wires completely. The core wires must contact the OT terminal closely.
- Wrap the wire crimping area with heat shrink tubing or insulation tape. The heat shrink tubing is used as an example.
- When using a heat gun, protect the equipment from being scorched.

Figure 5-6 Crimping an OT terminal

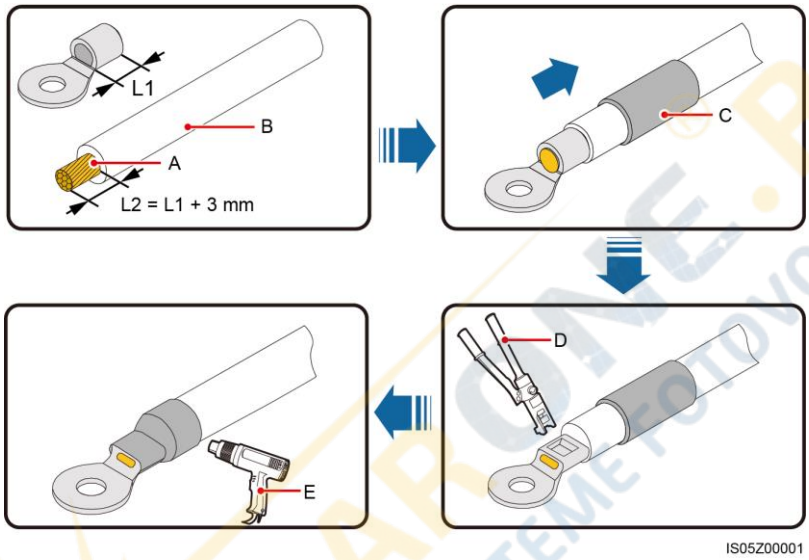

(A) Core wire	(B) Insulation layer	(C) Heat shrink tubing
(D) Hydraulic pliers	(E) Heat gun	

Step 2 Ground the PE cable.

Figure 5-7 Grounding the PE cable

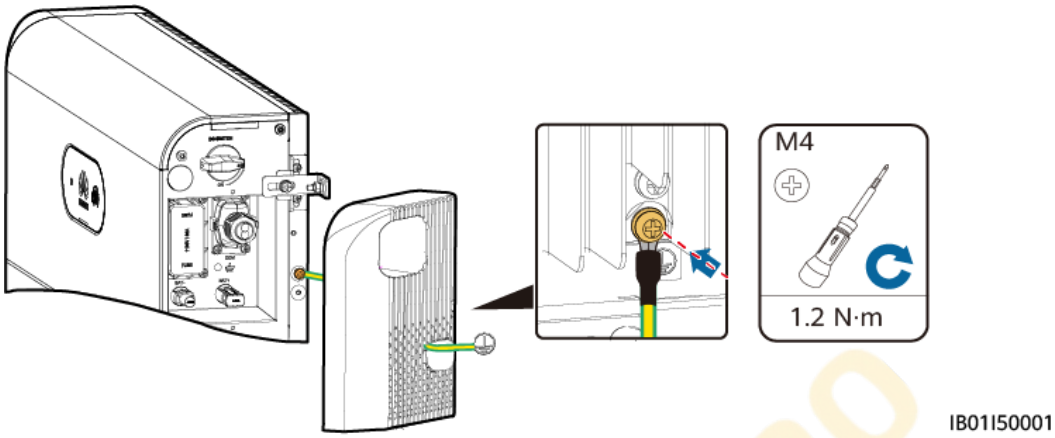

NOTE

- It is recommended that silica gel or paint be used around the ground terminal after the PE cable is connected.

----End

5.3.2 Installing DC Input Power Cables

Connect DC input power cables to the inverter

Insert the positive and negative battery connectors (Staubli) into the corresponding DC input terminals (BAT+ and BAT–).

NOTE

The DC input terminals (BAT+ and BAT–) on the left and right sides of the battery are the same.

Step 1 Assemble DC connectors.

Figure 5-8 Assembling DC connectors

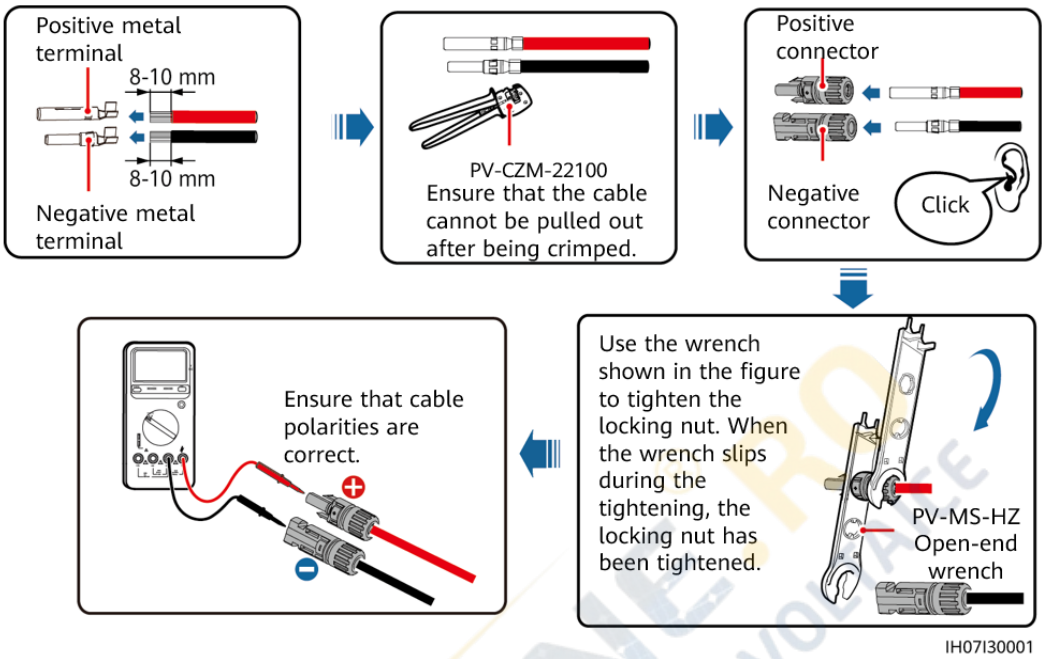

CAUTION

Use Staubli MC4 positive and negative metal terminals and DC connectors. Using incompatible positive and negative metal terminals and DC connectors may result in serious consequences. The caused equipment damage is not covered under any warranty or service agreement.

NOTICE

- Keep the DC input BAT+ cable and BAT– cable close to each other.
- Cables with high rigidity, such as armored cables, are not recommended as DC input power cables to avoid cable folding.
- Before assembling DC connectors, label the cable polarities correctly to ensure correct cable connections.
- After crimping the positive and negative metal terminals, pull the DC input power cables back to ensure that they are connected securely.
- Insert the crimped metal terminals of the positive and negative power cables into the appropriate positive and negative connectors. Then pull back the DC input power cables to ensure that they are connected securely.

Step 2 Insert the positive and negative connectors into the battery terminals (BAT+ and BAT-) on the switch and connect the other end to the cascaded battery.

Figure 5-9 Connecting battery cables

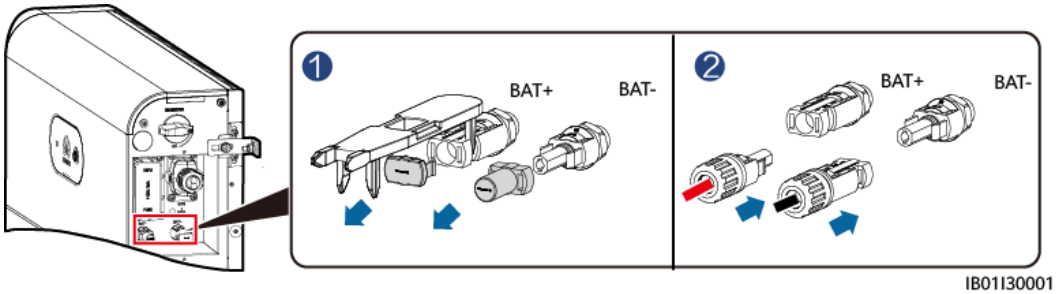

----End

5.3.3 Installing a Signal Cable

Connecting the Signal Cable between the Power Control Module and the Inverter

NOTICE

When laying out a signal cable, separate it from power cables and keep it away from strong interference sources to prevent communication interruption.

The COM port definitions on both sides of the power control module are the same. It is recommended that the COM port on the switch side be connected to the inverter and the COM port on the other side be connected to the cascaded battery.

Figure 5-10 Signal cable ports

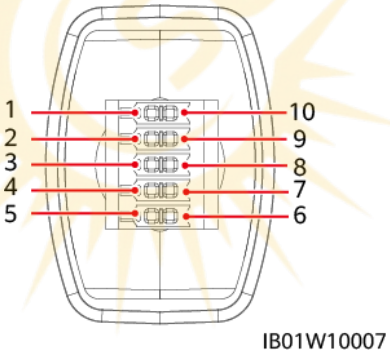

Table 5-3 COM port definition

No.	Label	Definition	Description
1	PE	Shield layer grounding	Shield layer grounding
2	Enable-	Enable signal GND	Connects to the enable signal GND of the inverter.

Copyright © Huawei Technologies Co., Ltd.

No.	Label	Definition	Description
3	Enable+	Enable signal+/12V+	Connects to the enable signal of the inverter and the positive terminal of the 12 V power supply.
4	485A1	RS485B, RS485 differential signal+	Connects to the RS485 signal port of the inverter.
5	485A2	RS485A, RS485 differential signal+	
6	485B1	RS485B, RS485 differential signal–	Connects to the RS485 signal port of the inverter.
7	485B2	RS485A, RS485 differential signal–	
8	CANL	Extended CAN bus port	Used for signal cable cascading in battery cascading scenarios.
9	CANH	Extended CAN bus port	Used for signal cable cascading in battery cascading scenarios.
10	PE	Shield layer grounding	Shield layer grounding

Connecting a Signal Cable (Cascading)

Prepare signal cable terminals for connecting the power control module.

Figure 5-11 Connecting inverter terminals

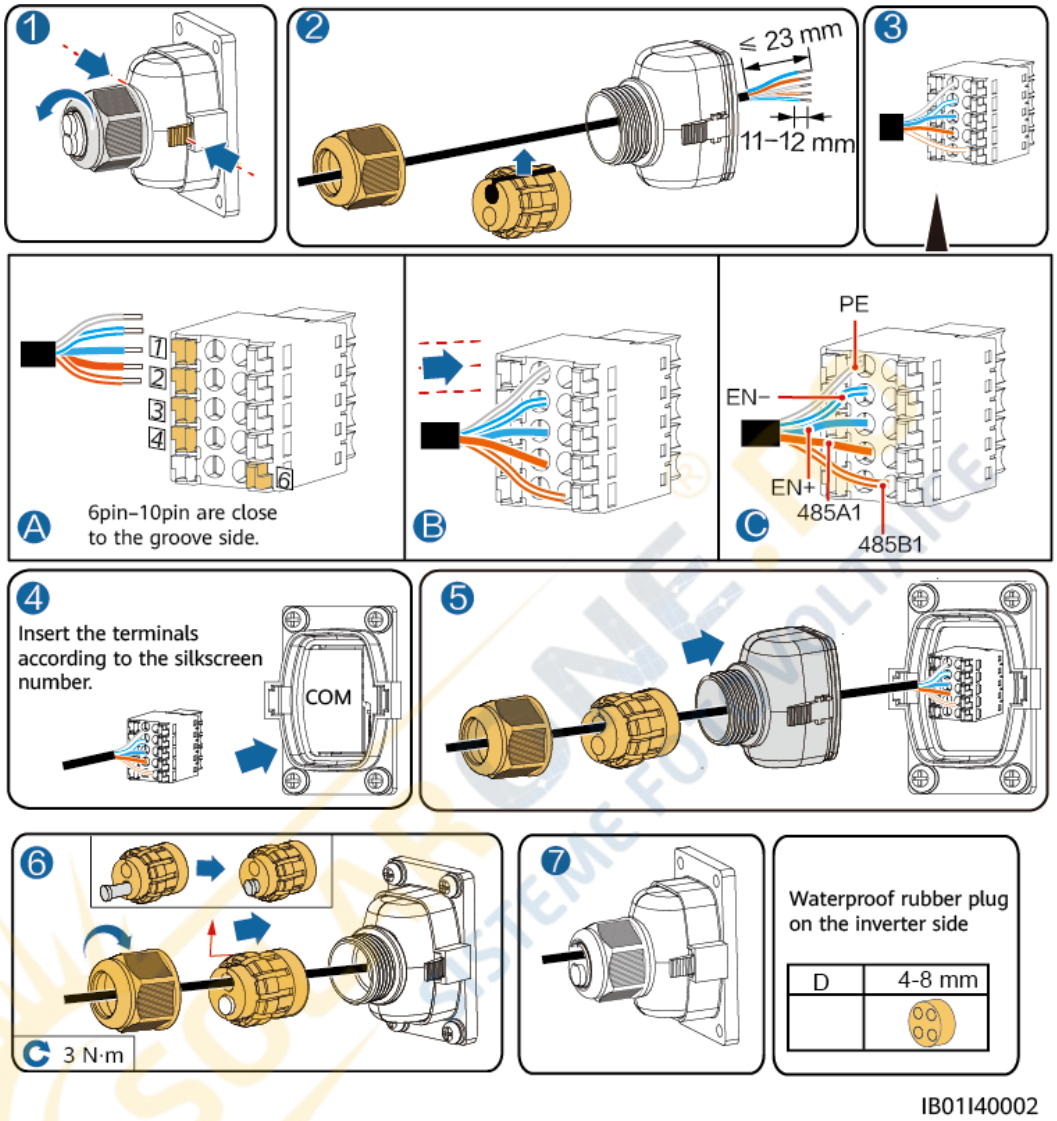

Copyright © Huawei Technologies Co., Ltd.

5.4 (Optional) Cascading Batteries

Battery Cascading Cable Connection

Figure 5-12 Battery cascading cable connection

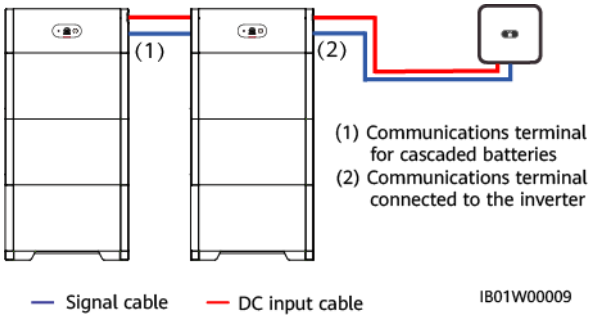

Connecting Cascading DC Input Power Cables (Cascading)

Connect the DC input terminals (BAT+ and BAT–) between the power control module by referring to 5.3.2 Installing DC Input Power Cables.

Connecting a Signal Cable (Cascading)

Prepare a signal cable terminal for connecting the power control module.

Copyright © Huawei Technologies Co., Ltd.

Figure 5-13 Cascading communication terminal

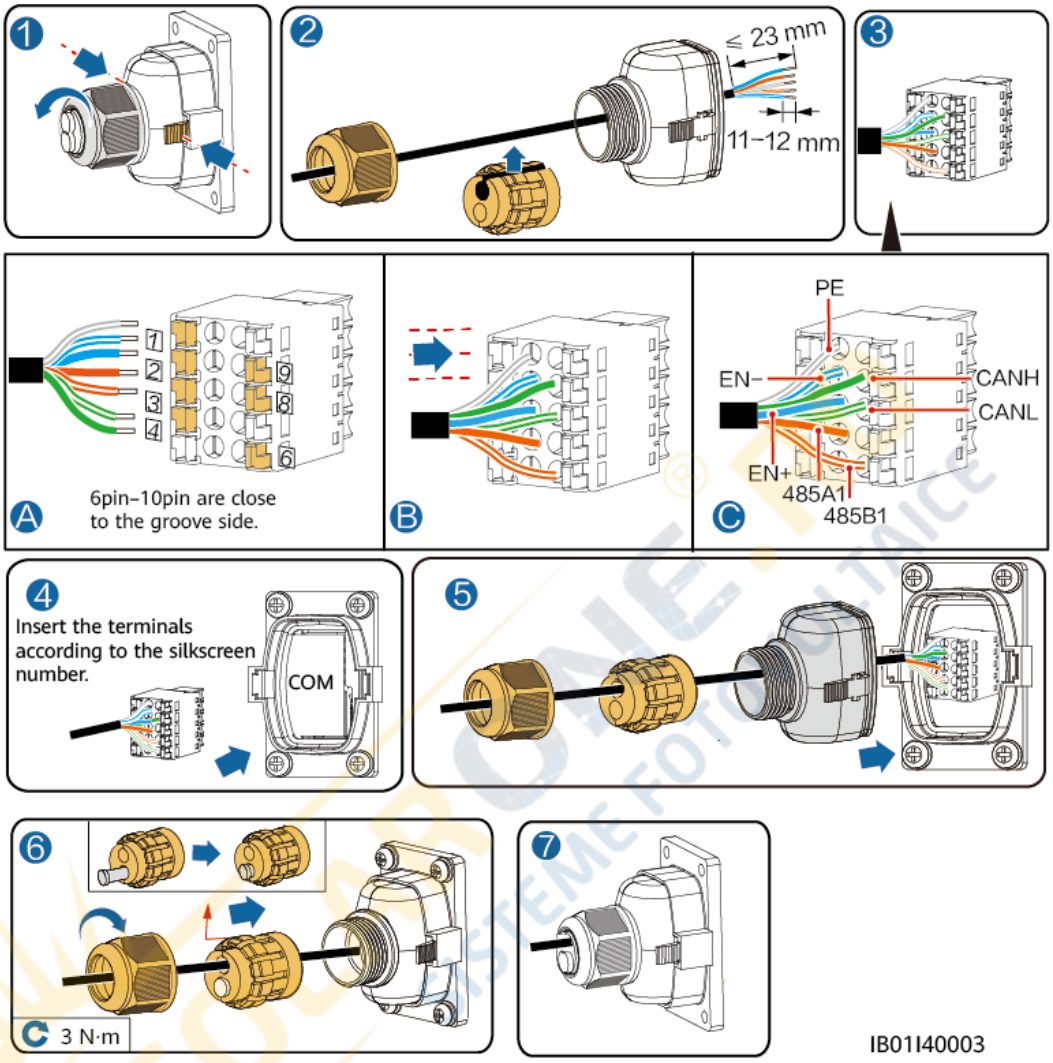

5.5 Installing the Cover

After electrical connections are complete, check that cables are correctly and securely connected, install the external protective cover, and secure it using screws.

Copyright © Huawei Technologies Co., Ltd.

Figure 5-14 Installing the cover

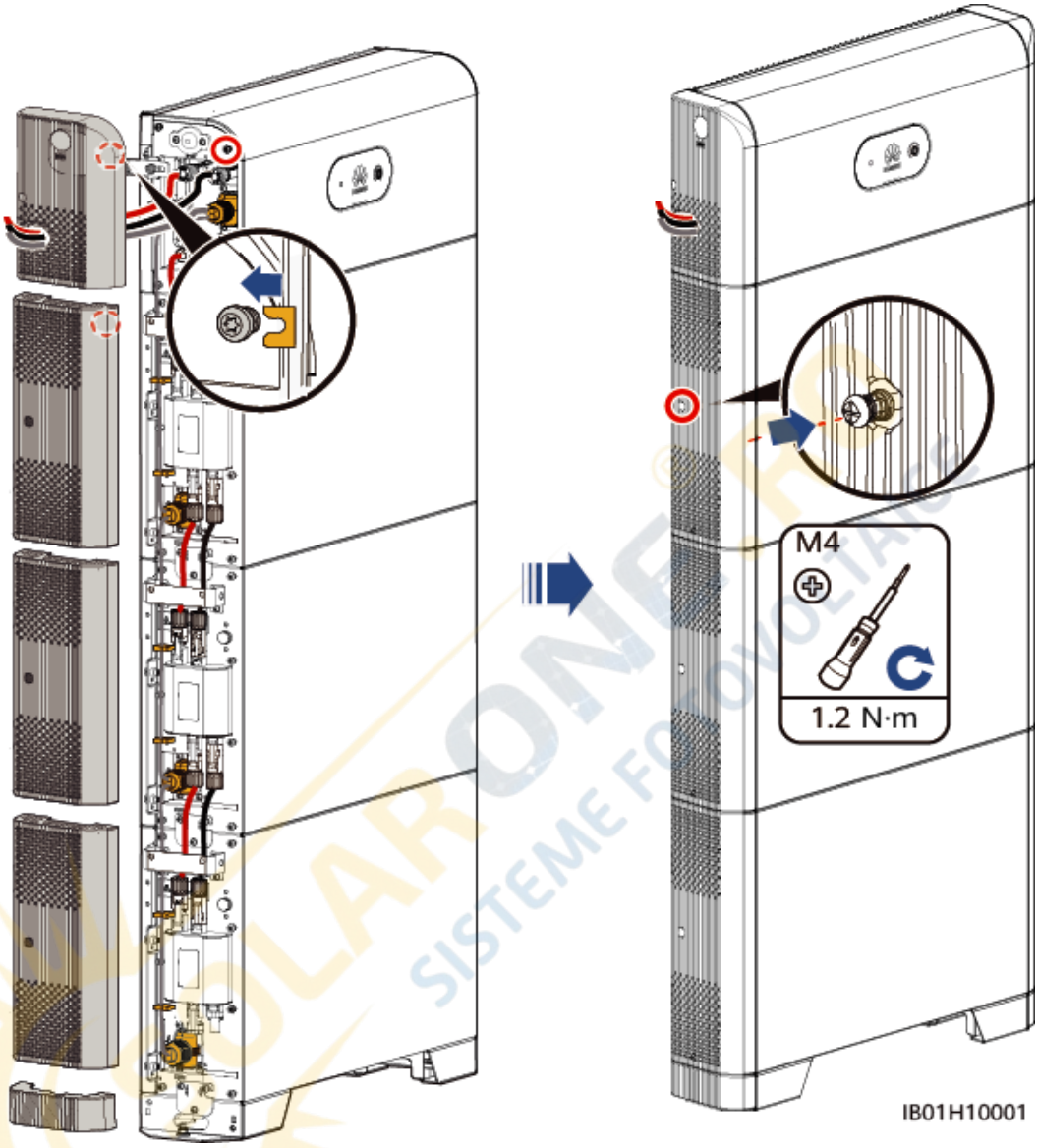

6 System Commissioning

6.1 Verification Before Power-On
6.2 System Power-On
6.3 Battery Commissioning

6.1 Verification Before Power-On

Table 6-1 Check items and acceptance criteria

No.	Check Item	Acceptance Criteria
1	Battery installation	The installation is correct and reliable.
2	Cables routing	Cables are routed properly as required by the customer.
3	Cable tie	Cable ties are evenly distributed and no burr exists.
4	Grounding	The PE cable is connected correctly, securely, and reliably.
5	Switch	The DC switch and all switches connected to the battery are OFF.
6	Cable connection	The AC output power cable, DC input power cable, battery cable, and signal cable are connected correctly, securely, and reliably.
7	Unused terminal and port	Unused terminals and ports are locked by watertight caps.
8	Installation environment	The installation space is proper, and the installation environment is clean and tidy.

 Copyright © Huawei Technologies Co., Ltd.

6.2 System Power-On

NOTICE

After turning on the battery switch, power on the inverter. For details about how to power on the inverter, see the quick guide for the corresponding inverter model.

NOTE

If no PV module is configured, press the black start button first.

Turn on the DC switch on the battery. After the battery is installed and powered on for the first time, the ring LED blinks for three circles. Touch the LED and observe the battery indicator to check the running status.

LED Indicators

Table 6-2 LED indicators

Category	Status (Blinking at Long Intervals: On for 1s and then Off for 1s; Blinking at Short Intervals: On for 0.2s and then Off for 0.2s)		Description
Running indicator			N/A
	Steady green	Steady green	Operating mode
	Blinking green slowly	Blinking green slowly	Standby mode
	Off	Off	Hibernation mode
	Blinking red fast	N/A	Power control module environment alarm
	N/A	Blinking red fast	Battery expansion module environment alarm
	Steady red	N/A	The power control module is faulty.
	N/A	Steady red	The battery expansion module is faulty.
	Steady red	Steady red	Faulty
Battery system indicator			N/A
	Green after touching		Battery level. Each bar indicates 10%.
	Steady red		The first three bars indicate the number of faulty battery expansion modules.

Copyright © Huawei Technologies Co., Ltd.

6.3 Battery Commissioning

Download and install the FusionSolar app.

Download and install the FusionSolar app of the latest version by referring to the quick guide for the corresponding inverter model or the *FusionSolar App Quick Guide*. Then register the installer and create a PV plant and owner (skip this step if the account has been created). You can obtain the *FusionSolar App Quick Guide* by scanning the following QR code.

Figure 6-1 FusionSolar App Quick Guide

6.3.1 Battery Deployment

Function

Add a battery and set the working mode on the quick settings screen of the inverter.

(Optional) Upgrading the Inverter and Smart Dongle

When the app connects to the inverter, a message is displayed, asking you to upgrade the inverter version. Smart Dongle V100R001C00SPC117 and later versions support LUNA2000 battery. But the Smart Dongle cannot be upgraded locally. You need to perform the upgrade through the management system. The operation procedure will be updated later.

Quick Settings

Step 1 Log in to the FusionSolar app using the installer's account. Tap **Quick Settings** on the home screen to add the battery and set the battery working mode. The battery working mode is set to **Maximum self-consumption** by default. Tap **?** to view the details. View the detailed settings and select a working mode by referring to 3 Application Scenarios and Settings.

Figure 6-2 Quick settings

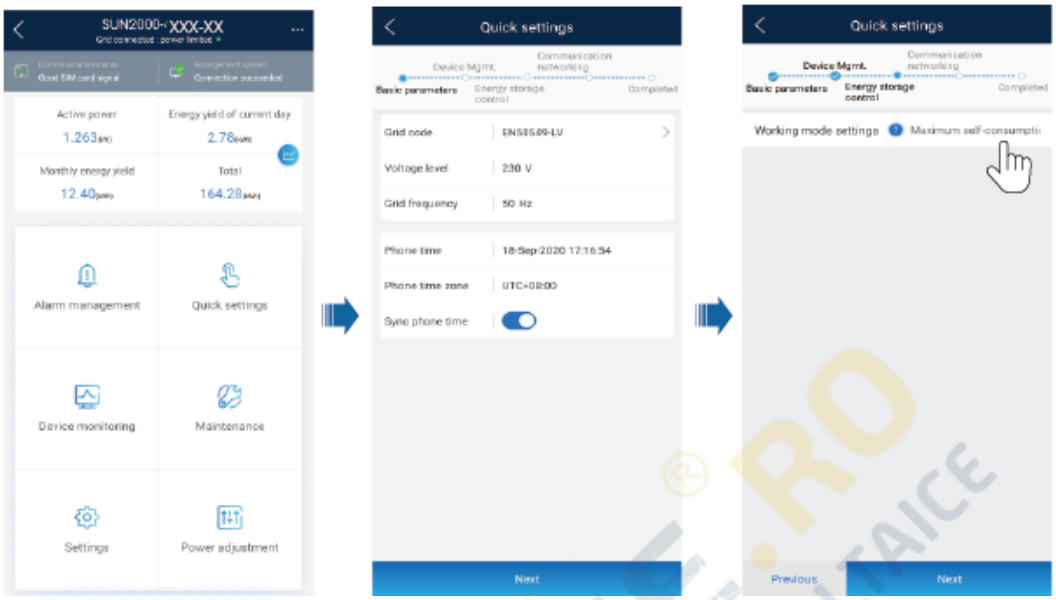

----End

6.3.2 Battery Control

Function

When the inverter connects to a battery, add the battery and set battery parameters.

Adding a Battery

To add a battery, choose **Maintenance** > **Subdevice management** on the home screen.

Figure 6-3 Adding a battery

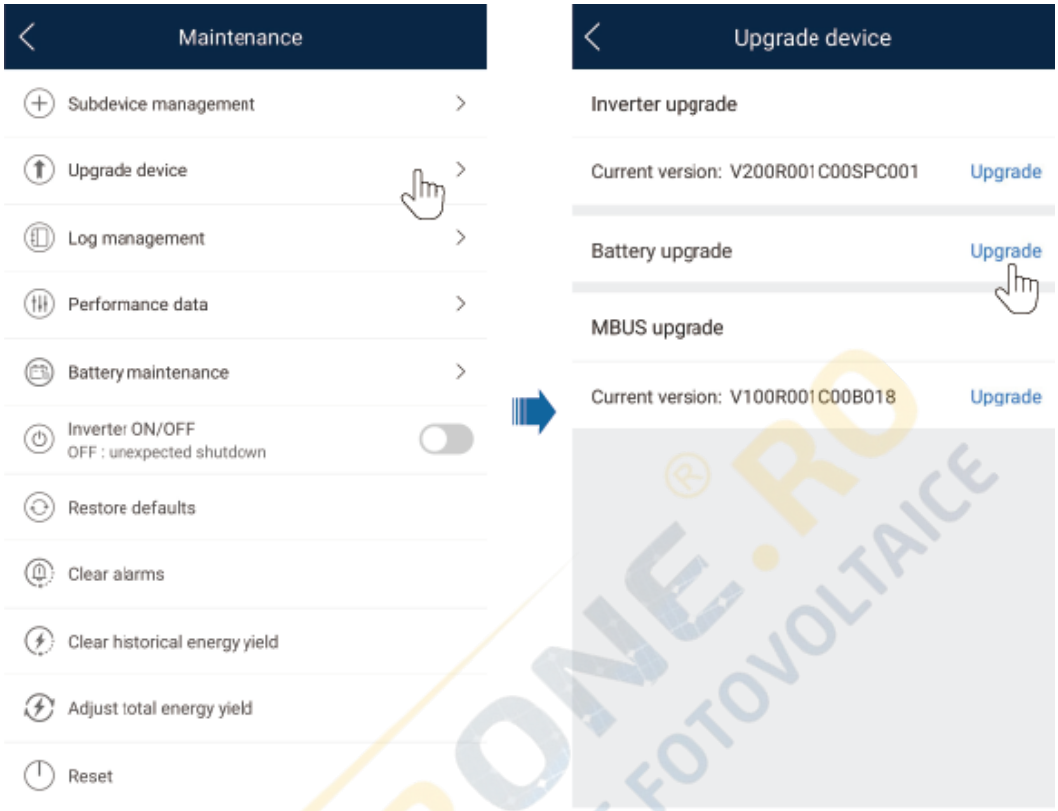

Parameters Settings

On the home screen, choose **Power adjustment** > **Battery control**, and set the battery parameters and working mode.

Figure 6-4 Battery control parameter setting

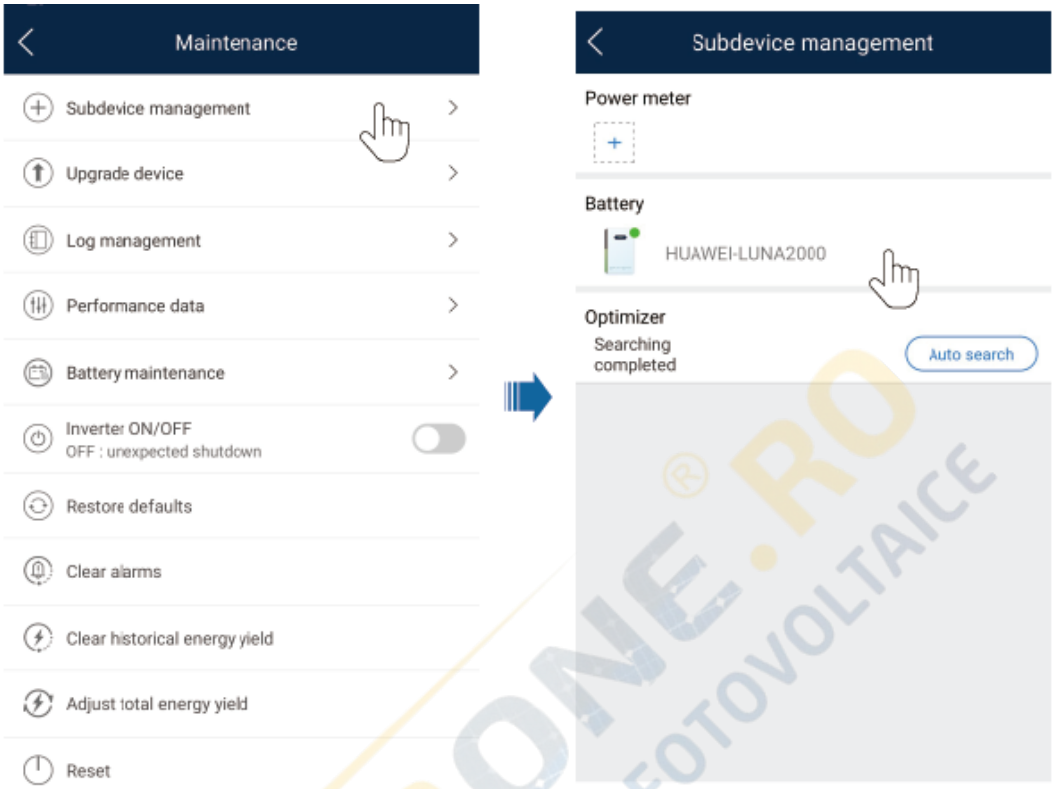

Parameter	Description	Value Range
Working mode	For details, see the description on the app screen.	• Maximum self-consumption • Time-of-use • Fully fed to grid
Maximum charge power (kW)	Retain this parameter to the maximum charge power. Additional configuration is not required.	• Charge: [0, Maximum charge power]
Maximum discharge power (kW)	Retain this parameter to the maximum discharge power. Additional configuration is not required.	• Discharge: [0, Maximum discharge power]
End-of-charge capacity (%)	Set the charge cutoff capacity.	80%–100%
End-of-discharge capacity (%)	Set the charge cutoff capacity.	0%–20%
Charge from grid	If **Charge from grid** function is disabled by	• Disable

Parameter	Description	Value Range
	default, comply with the grid charge requirements stipulated in local laws and regulations when this function is enabled.	• Enable
Grid charge cutoff SOC	Set the grid charge cutoff SOC.	[0, 100%]

6.3.3 Battery Status Check

On the home screen, tap **Device monitoring** on the home screen to view the running status, level, power, and charge and discharge status of the battery.

Figure 6-5 Device monitoring

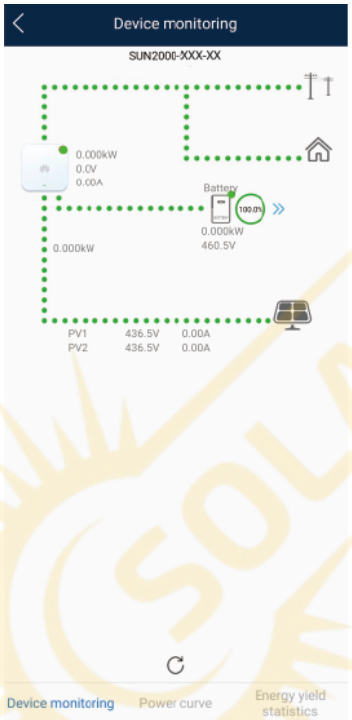

6.3.4 Battery Maintenance and Upgrade

On the home screen, choose **Maintenance** > **Battery upgrade** and set related parameters.

Forced Charge and Discharge

Step 1 Choose **Maintenance** > **Battery maintenance** > **Forced charge/discharge**, perform operations, and click **Submit**.

Figure 6-6 Forced charge and discharge

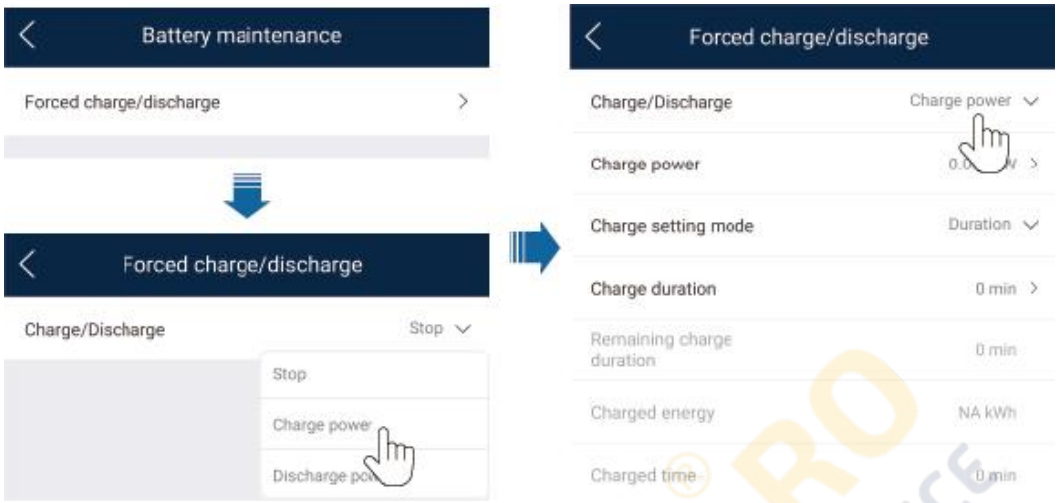

Table 6-3 Description of forced charge/discharge parameters

Parameter	Description	Value Range
Charge/discharge	Specifies whether to charge or discharge the battery.	• Stop • Charge • Discharge
Charge/Discharge power (kW)	Specifies the forced charge/discharge power.	• Charge: [0, Maximum charge power] • Discharge: [0, Maximum discharge power]
Charge/Discharge setting mode	Set the charge and discharge mode.	• Duration • Charged/Discharged energy
Charge/Discharge duration (min)	Sets the charge and discharge duration.	[0, 1440]
Remaining charge/discharge duration (min)	Indicates the remaining charge and discharge duration. This parameter cannot be set.	-
Charged/Discharged energy (kWh)	Indicates the charged or discharged battery level. This parameter cannot be set.	-
Charged/Discharged duration (min)	Indicates the charged and discharged duration. This parameter cannot be set.	-

----End

Downloading an Upgrade Package

Step 1 When the network is connected，on the app connection screen, tap ••• in the upper right corner and choose **File download**.

Figure 6-7 Downloading a file

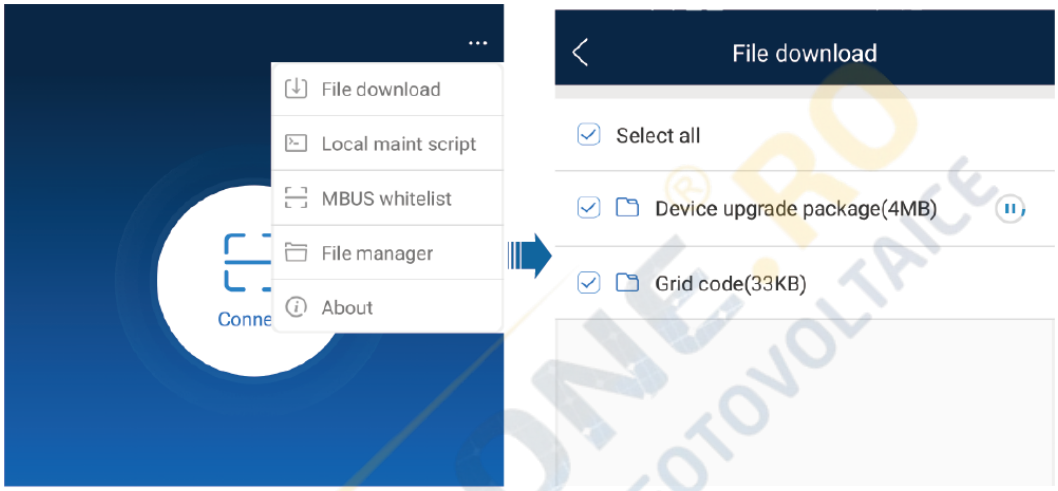

Step 2 Download the device upgrade package and grid code when an update is detected.

Step 3 On the screen for downloading the upgrade package, tap **Download**.

----End

Version Upgrade

Step 1 Choose **Maintenance** > **Subdevice management** to upgrade the battery version.

Figure 6-8 Upgrading the battery

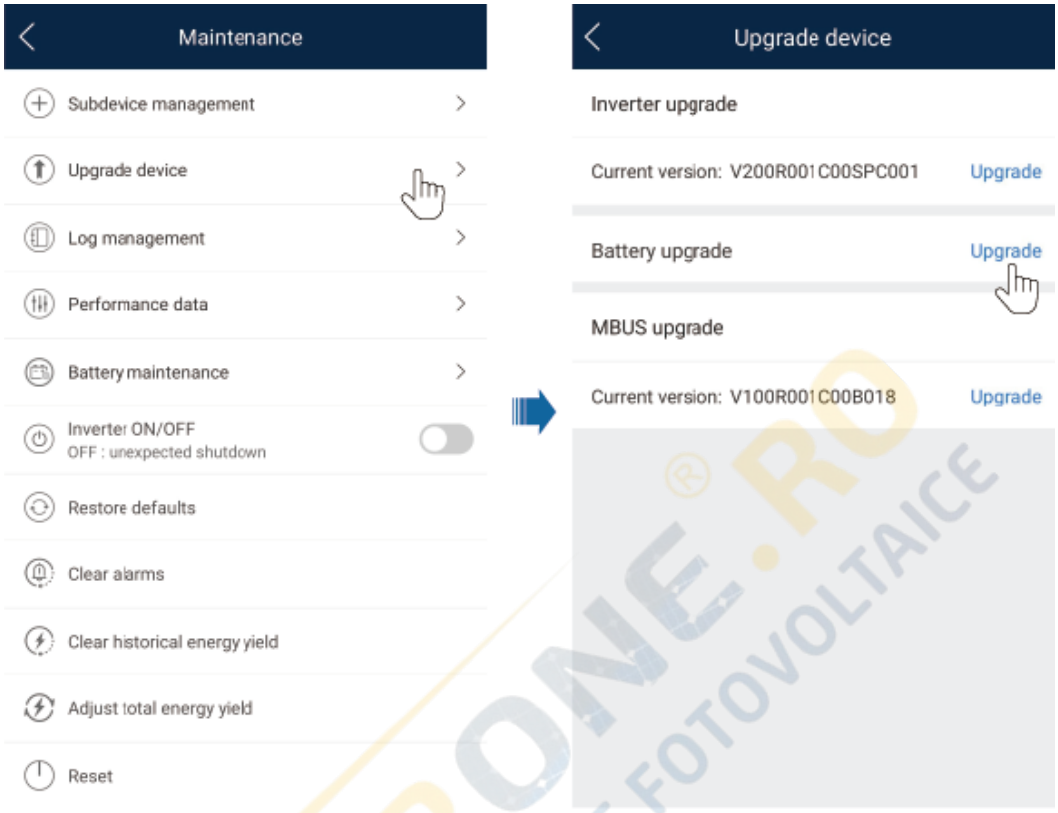

----End

SOLARONE.RO SISTEME FOTOVOLTAICE

7 System Maintenance

7.1 System Power-Off
7.2 Routine Maintenance
7.3 Troubleshooting
7.4 Battery Storage and Recharge

7.1 System Power-Off

Precautions

WARNING

After the system powers off, the remaining electricity and heat may still cause electric shocks and body burns. Therefore, wear protective gloves 5 minutes after the system is powered off before performing any operation on the battery.

After powering off the connected inverter, turn off the DC switch for the battery.

7.2 Routine Maintenance

To ensure that the battery can operate properly for a long term, you are advised to perform routine maintenance on it as described in this chapter.

CAUTION

Before cleaning the system, connecting cables, and ensuring the grounding reliability, power off the system.

 Copyright © Huawei Technologies Co., Ltd.

Table 7-1 Maintenance checklist

Check Item	Check Method	Maintenance Interval
System cleanliness	Check periodically that the heat sinks are free from obstacles and dust.	Once every 6 to 12 months
System running status	• Check that the battery is not damaged or deformed. • Check that the battery does not generate abnormal sound when it is in operation. • Check that the battery parameters are correctly set when the battery is running.	Once every 6 months
Electrical Connection	• Check that cables are secured. • Check that cables are intact, and that in particular, the parts touching the metallic surface are not scratched. • Check that unused DC input terminals, battery terminals, and COM ports are locked by watertight caps.	The first inspection is 6 months after the initial commissioning. From then on, the interval can be 6 to 12 months.
Grounding reliability	Check that ground cables are securely connected.	The first inspection is 6 months after the initial commissioning. From then on, the interval can be 6 to 12 months.

7.3 Troubleshooting

Alarm severities are defined as follows:

- Major: The inverter shuts down or some functions are abnormal due to a fault.
- Minor: Some components of the inverter are faulty but the system can still connect to the grid and generate power.

7.4 Battery Storage and Recharge

Battery Storage

1. Place batteries according to the labels on the packing case. Do not put batteries upside down or sidelong.

2. Stack battery packing cases by complying with the stacking requirements on the external package.

3. Handle batteries with caution to avoid damage.

4. Storage environment requirements:

Ambient temperature: 0–40 ℃; recommended storage temperature: 20–30 ℃

Relative humidity: 5% to 80%

Place batteries in a dry and clean place with proper ventilation.

Place batteries in a place that is away from corrosive organic solvents and gases.

Keep batteries away from direct sunlight.

Keep batteries at least 2 meters away from heat sources.

Battery Recharge Period

Recharge the battery if it is not used for a long time.

Table 7-2 Recharge interval

Required Storage Temperature	Actual Storage Temperature	Recharge Interval	Remarks
0 ℃–40 ℃	0°C ≤ T ≤ 30°C	12 months	Within the recharge interval: Use the battery as soon as possible. Beyond the recharge interval: Recharge the battery. The total storage duration should not exceed the warranty period.
	30°C < T ≤ 40°C	8 months	

Battery Recharge Requirements

It is recommended that one distributed lithium battery be charged. (Use the default charge current limit. The default current of LUNA2000-5-E0 is less than or equal to 0.5C.)

Installing Battery Cables

Step 1 Prepare the battery qualified for recharge.

Step 2 Connect cables by referring to the battery quick guide and inverter quick guide.

Step 3 Check that all cables are reliably connected with correct polarity and there is no short circuit.

----End

Battery Power-On and Commissioning

NOTICE

- Ensure that the charge process is supervised to prevent any abnormality.
- If a battery experiences an abnormality such as bulging or smoking, stop charging immediately and dispose of it.
- Ensure that only trained professionals perform recharge operations.

For details about how to store and recharge the battery, see the *Lithium Battery Storage and Recharge Guide*.

SOLARONE.RO® SISTEME FOTOVOLTAICE

8 Technical Specifications

8.1 LUNA2000-5KW-C0
8.2 LUNA2000-5-E0

8.1 LUNA2000-5KW-C0

Technical Specifications	LUNA2000-5KW-C0
Rated charge and discharge power	5 kW
Peak discharge power (10s)	7 kW
Charge and discharge voltage range on the high-voltage side	• Single-phase inverter: 350–560 V • Three-phase inverter: 600–980 V
Working mode when the charge/discharge voltage on the high-voltage side is beyond the range	• Single-phase inverter: – 550–620 V. The DC-DC converter does not work and is not damaged. • Three-phase inverter: – 1000–1100 V. The DC-DC converter does not work and is not damaged.
Voltage range on the low-voltage side	300–400 V
Dimensions (H x W x D)	240 mm x 670 mm x 150 mm
Weight	62 kg
Cooling mode	Free cooling
IP rating	IP55
Communications	RS485, CAN

 Copyright © Huawei Technologies Co., Ltd.

Technical Specifications	LUNA2000-5KW-C0
Operating temperature	–10 ℃ to +55 ℃
Operating humidity	5%–95% RH
Maximum operating altitude	4000 m

8.2 LUNA2000-5-E0

Technical Specifications	LUNA2000-5-E0
Total nominal capacity	5.12 kWh
Nominal available capacity	5 kWh
Operating voltage range	300–400 V
Battery cell type	$LiFePO_4$
Dimensions (H x W x D)	360 mm x 670 mm x 150 mm
Weight	48 kg
Cooling mode	Free cooling
IP rating	IP55
Operating temperature	–10 ℃ to +55 ℃
Maximum operating altitude	4000 m

SOLARONE.RO SISTEME FOTOVOLTAICE

9 FAQ

9.1 How Do I Replace a Fuse?

9.1 How Do I Replace a Fuse?

Step 1 Power off the system. For details, see 7.1 System Power-Off.

WARNING

After the system is powered off, the remaining electricity and heat still exist in the chassis, which may cause electric shocks or burns. Therefore, you need to wear protective gloves and perform operations 5 minutes after the system is powered off.

Step 2 Loosen the screws on the fuse shell.

Figure 9-1 Removing the screw shell

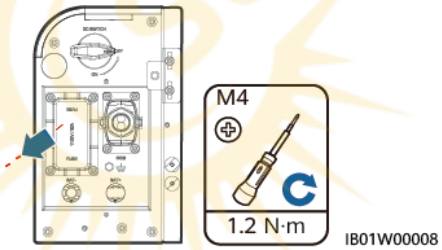

Step 3 Lift the fuse box opening, remove the fuse, insert a new fuse into the slot, and close the fuse box. If you hear a click sound and the bulge on the side is inside the box, the fuse box is properly installed.

 Copyright © Huawei Technologies Co., Ltd.

Figure 9-2 Replacing a fuse

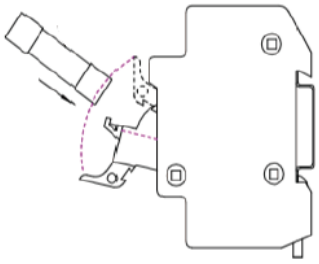

----End

Fuse Specifications

Table 9-1 Fuse specifications

	Required Specifications		
	Lower Limit	Typical Value	Upper Limit
Component type		Fuse	
Fuse type		Fast blow fuse	
Rated voltage (V AC&V DC)	1100 V DC		
Rated current	32 A		
Breaking capacity	10 kA		
Nominal fusing heat I2T	600		1000
Cold resistance value			0.005 Ω
Package dimensions (the dimension tolerance should be specified in the specifications provided by the supplier)		14 mm x 51 mm	

A Acronyms and Abbreviations

A	
APP	application
B	
BMS	battery management system
D	
DC	direct current
F	
FIT	feed-in tariff
E	
EMI	electromagnetic interference
P	
PV	photovoltaic
V	
VPP	virtual power plant

SOLARONE.RO® SISTEME FOTOVOLTAICE