NEW

CanadianSolar

TOPBiHiKu6

N-type Bifacial TOPCon Technology

590 W ~ 620 W

CS6.1-72TB-590|595|600|605|610|615|620 (IEC1500 V)

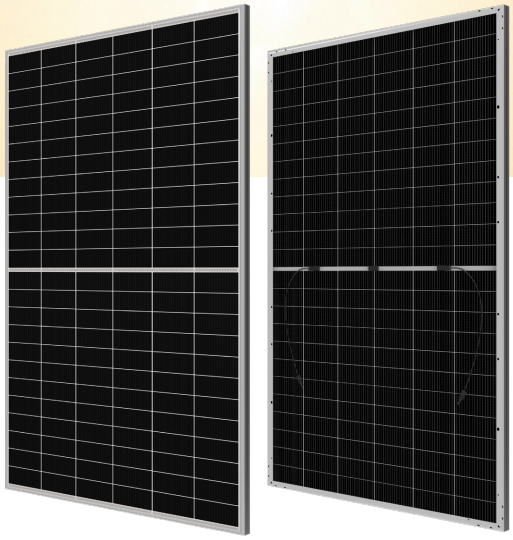

FRONT BACK

MORE POWER

620 W — Module power up to 620 W
Module efficiency up to 23.0 %

EXTRA POWER — Up to 85% Power Bifaciality,
more power from the back side

Excellent anti-LeTID & anti-PID performance.
Low power degradation, high energy yield

Lower temperature coefficient (Pmax): -0.29%/°C,
increases energy yield in hot climate

Lower LCOE & system cost

MORE RELIABLE

Minimizes micro-crack impacts

Heavy snow load up to 5400 Pa,
wind load up to 2400 Pa*

12 Years — **Enhanced Product Warranty on Materials and Workmanship***

30 Years — **Linear Power Performance Warranty***

1st year power degradation no more than 1%
Subsequent annual power degradation no more than 0.4%

*According to the applicable Canadian Solar Limited Warranty Statement.

MANAGEMENT SYSTEM CERTIFICATES*

ISO 9001: 2015 / Quality management system
ISO 14001: 2015 / Standards for environmental management system
ISO 45001: 2018 / International standards for occupational health & safety
IEC 62941: 2019 / Photovoltaic module manufacturing quality system

PRODUCT CERTIFICATES*

IEC 61215 / IEC 61730 / CE / MCS / UKCA / INMETRO / CGC
UL 61730 / IEC 61701 / IEC 62716 / IEC 60068-2-68
UNI 9177 Reaction to Fire: Class 1 / Take-e-way

* The specific certificates applicable to different module types and markets will vary, and therefore not all of the certifications listed herein will simultaneously apply to the products you order or use. Please contact your local Canadian Solar sales representative to confirm the specific certificates available for your Product and applicable in the regions in which the products will be used.

CSI Solar Co., Ltd. is committed to providing high quality solar photovoltaic modules, solar energy and battery storage solutions to customers. The company was recognized as the No. 1 module supplier for quality and performance/price ratio in the IHS Module Customer Insight Survey. Over the past 22 years, it has successfully delivered over 110 GW of premium-quality solar modules across the world.

* For detailed information, please refer to the Installation Manual.

Canadian Solar MSS (Australia) Pty Ltd.
333 Drummond Street, Carlton VIC 3053, Australia, sales.au@csisolar.com, www.csisolar.com/au

ENGINEERING DRAWING (mm)

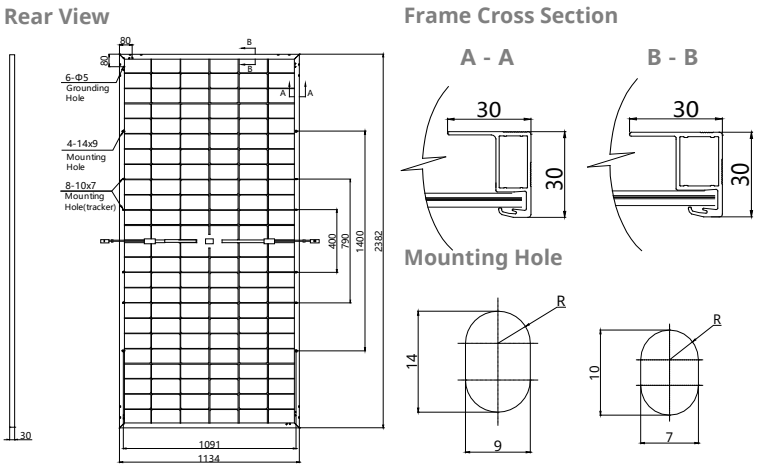

CS6.1-72TB-600 / I-V CURVES

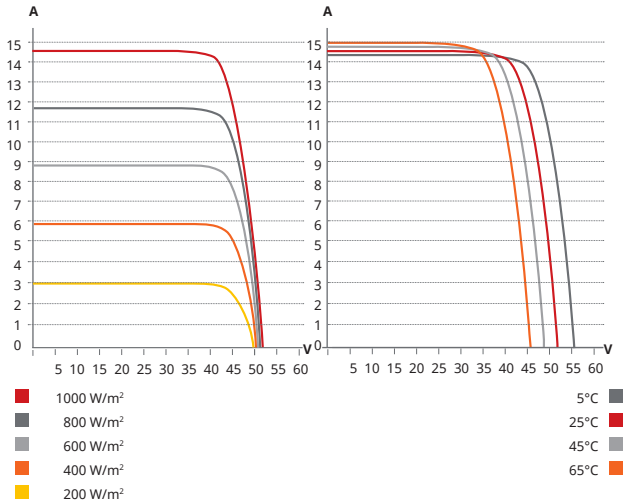

ELECTRICAL DATA | STC*

		Nominal Max. Power (Pmax)	Opt. Operating Voltage (Vmp)	Opt. Operating Current (Imp)	Open Circuit Voltage (Voc)	Short Circuit Current (Isc)	Module Efficiency
CS6.1-72TB-590		590 W	43.6 V	13.54 A	51.4 V	14.42 A	21.8%
Bifacial Gain**	5%	620 W	43.6 V	14.22 A	51.4 V	15.14 A	23.0%
	10%	649 W	43.6 V	14.89 A	51.4 V	15.86 A	24.0%
	20%	708 W	43.6 V	16.25 A	51.4 V	17.30 A	26.2%
CS6.1-72TB-595		595 W	43.8 V	13.59 A	51.6 V	14.48 A	22.0%
Bifacial Gain**	5%	625 W	43.8 V	14.27 A	51.6 V	15.20 A	23.1%
	10%	655 W	43.8 V	14.95 A	51.6 V	15.93 A	24.2%
	20%	714 W	43.8 V	16.31 A	51.6 V	17.38 A	26.4%
CS6.1-72TB-600		600 W	44.0 V	13.64 A	51.8 V	14.54 A	22.2%
Bifacial Gain**	5%	630 W	44.0 V	14.32 A	51.8 V	15.27 A	23.3%
	10%	660 W	44.0 V	15.00 A	51.8 V	15.99 A	24.4%
	20%	720 W	44.0 V	16.37 A	51.8 V	17.45 A	26.7%
CS6.1-72TB-605		605 W	44.2 V	13.69 A	52.0 V	14.60 A	22.4%
Bifacial Gain**	5%	635 W	44.2 V	14.37 A	52.0 V	15.33 A	23.5%
	10%	666 W	44.2 V	15.06 A	52.0 V	16.06 A	24.7%
	20%	726 W	44.2 V	16.43 A	52.0 V	17.52 A	26.9%
CS6.1-72TB-610		610 W	44.4 V	13.74 A	52.2 V	14.66 A	22.6%
Bifacial Gain**	5%	641 W	44.4 V	14.43 A	52.2 V	15.39 A	23.7%
	10%	671 W	44.4 V	15.11 A	52.2 V	16.13 A	24.8%
	20%	732 W	44.4 V	16.49 A	52.2 V	17.59 A	27.1%
CS6.1-72TB-615		615 W	44.6 V	13.79 A	52.4 V	14.72 A	22.8%
Bifacial Gain**	5%	646 W	44.6 V	14.48 A	52.4 V	15.46 A	23.9%
	10%	677 W	44.6 V	15.17 A	52.4 V	16.19 A	25.1%
	20%	738 W	44.6 V	16.55 A	52.4 V	17.66 A	27.3%
CS6.1-72TB-620		620 W	44.8 V	13.84 A	52.6 V	14.78 A	23.0%
Bifacial Gain**	5%	651 W	44.8 V	14.53 A	52.6 V	15.52 A	24.1%
	10%	682 W	44.8 V	15.22 A	52.6 V	16.26 A	25.2%
	20%	744 W	44.8 V	16.61 A	52.6 V	17.74 A	27.5%

* Under Standard Test Conditions (STC) of irradiance of 1000 W/m², spectrum AM 1.5 and cell temperature of 25°C. Measurement uncertainty: ±3 % (Pmax).
** Bifacial Gain: The additional gain from the back side compared to the power of the front side at the standard test condition. It depends on mounting (structure, height, tilt angle etc.) and albedo of the ground.

ELECTRICAL DATA | NMOT*

	Nominal Max. Power (Pmax)	Opt. Operating Voltage (Vmp)	Opt. Operating Current (Imp)	Open Circuit Voltage (Voc)	Short Circuit Current (Isc)
CS6.1-72TB-590	446 W	41.2 V	10.82 A	48.7 V	11.63 A
CS6.1-72TB-595	450 W	41.4 V	10.87 A	48.9 V	11.68 A
CS6.1-72TB-600	454 W	41.6 V	10.91 A	49.0 V	11.73 A
CS6.1-72TB-605	458 W	41.8 V	10.95 A	49.2 V	11.77 A
CS6.1-72TB-610	461 W	42.0 V	10.99 A	49.4 V	11.82 A
CS6.1-72TB-615	465 W	42.2 V	11.03 A	49.6 V	11.87 A
CS6.1-72TB-620	469 W	42.4 V	11.07 A	49.8 V	11.92 A

* Under Nominal Module Operating Temperature (NMOT), irradiance of 800 W/m², spectrum AM 1.5, ambient temperature 20°C, wind speed 1 m/s.

MECHANICAL DATA

Specification	Data
Cell Type	TOPCon cells
Cell Arrangement	144 [2 x (12 x 6)]
Dimensions	2382 × 1134 × 30 mm (93.8 × 44.6 × 1.18 in)
Weight	33.6 kg (74.1 lbs)
Front Glass	2.0 mm heat strengthened glass with anti-reflective coating
Back Glass	2.0 mm heat strengthened glass
Frame	Anodized aluminium alloy
J-Box	IP68, 3 bypass diodes
Cable	4.0 mm² (IEC), 12 AWG (UL)
Cable Length (Including Connector)	300 mm (11.8 in) (+) / 200 mm (7.9 in) (-) or customized length*
Connector	Tlian: T6 Stäubli: PV-KST4-EVO2/XY, PV-KBT4-EVO2/XY or PV-KST4-EVO2A/XY, PV-KBT4-EVO2A/XY
Per Pallet	36 pieces
Per Container (40' HQ)	720 pieces

* For detailed information, please contact your local Canadian Solar sales and technical representatives.

ELECTRICAL DATA

Operating Temperature	-40°C ~ +85°C
Max. System Voltage	1500 V (IEC/UL)
Module Fire Performance	TYPE 29 (UL 61730) or CLASS C (IEC61730)
Max. Series Fuse Rating	30 A
Protection Class	Class II
Power Tolerance	0 ~ + 10 W
Power Bifaciality*	80 %

* Power Bifaciality = $Pmax_{rear}$ / $Pmax_{front}$, both $Pmax_{rear}$ and $Pmax_{front}$ are tested under STC, Bifaciality Tolerance: ± 5 %

TEMPERATURE CHARACTERISTICS

Specification	Data
Temperature Coefficient (Pmax)	-0.29 % / °C
Temperature Coefficient (Voc)	-0.25 % / °C
Temperature Coefficient (Isc)	0.05 % / °C
Nominal Module Operating Temperature	41 ± 3°C

* The specifications and key features contained in this datasheet may deviate slightly from our actual products due to the on-going innovation and product enhancement. CSI Solar Co., Ltd. reserves the right to make necessary adjustment to the information described herein at any time without further notice.
Please be kindly advised that PV modules should be handled and installed by qualified people who have professional skills and please carefully read the safety and installation instructions before using our PV modules.

PARTNER SECTION

Canadian Solar MSS (Australia) Pty Ltd.
333 Drummond Street, Carlton VIC 3053, Australia, sales.au@csisolar.com, www.csisolar.com/au

March 2024. All rights reserved, PV Module Product Datasheet V1.7_AU
* Manufactured and assembled in China and Thailand.