SmartGuard-63A-(T0, AUT0)

User Manual

Issue	01
Date	2024-05-06

SOLARONE.RO
SISTEME FOTOVOLTAICE

HUAWEI DIGITAL POWER TECHNOLOGIES CO., LTD.

Copyright © Huawei Digital Power Technologies Co., Ltd. 2024. All rights reserved.

No part of this document may be reproduced or transmitted in any form or by any means without prior written consent of Huawei Digital Power Technologies Co., Ltd.

Trademarks and Permissions

HUAWEI and other Huawei trademarks are the property of Huawei Technologies Co., Ltd.
All other trademarks and trade names mentioned in this document are the property of their respective holders.

Notice

The purchased products, services and features are stipulated by the contract made between Huawei Digital Power Technologies Co., Ltd. and the customer. All or part of the products, services and features described in this document may not be within the purchase scope or the usage scope. Unless otherwise specified in the contract, all statements, information, and recommendations in this document are provided "AS IS" without warranties, guarantees or representations of any kind, either express or implied. The information in this document is subject to change without notice. Every effort has been made in the preparation of this document to ensure accuracy of the contents, but all statements, information, and recommendations in this document do not constitute a warranty of any kind, express or implied.

Huawei Digital Power Technologies Co., Ltd.

Address: Huawei Digital Power Antuoshan Headquarters
Futian, Shenzhen 518043
People's Republic of China

Website: https://digitalpower.huawei.com

About This Document

Purpose

This document describes the SmartGuard-63A-T0 and SmartGuard-63A-AUT0 in terms of safety precautions, product introduction, installation, electrical connections, power-on and commissioning, maintenance, and technical specifications. Read this document carefully before installing and using the SmartGuard.

Intended Audience

The document is intended for:

- Sales engineers
- System engineers
- Technical support engineers

Symbol Conventions

The symbols that may be found in this manual are defined as follows.

Symbol	Description
DANGER	Indicates a hazard with a high level of risk which, if not avoided, will result in death or serious injury.
WARNING	Indicates a hazard with a medium level of risk which, if not avoided, could result in death or serious injury.
CAUTION	Indicates a hazard with a low level of risk which, if not avoided, could result in minor or moderate injury.
NOTICE	Indicates a potentially hazardous situation which, if not avoided, could result in equipment damage, data loss, performance deterioration, or unanticipated results. NOTICE is used to address practices not related to personal injury.

 Copyright © Huawei Digital Power Technologies Co., Ltd.

Symbol	Description
NOTE	Supplements the important information in the main text. NOTE is used to address information not related to personal injury, equipment damage, and environment deterioration.

Change History

Changes between document issues are cumulative. The latest document issue contains all the changes in earlier issues.

Issue 01 (2024-05-06)

This issue is the first official release.

SOLARONE.RO SISTEME FOTOVOLTAICE

Contents

About This Document ii

1 Safety Information 1

1.1 Personal Safety 2
1.2 Electrical Safety 4
1.3 Environment Requirements 7
1.4 Mechanical Safety 8

2 Product Description 13

2.1 Model Number Description 13
2.2 Networking 14
2.3 Appearance 22
2.4 Working Principles 24
2.5 Working Modes 24
2.6 Label Description 25

3 Storage Requirements 28

4 System Installation 29

4.1 Installation Modes 29
4.2 Installation Position 29
4.2.1 Site Selection Requirements 29
4.2.2 Clearance Requirements 30
4.2.3 Angle Requirements 31
4.3 Preparing Tools 32
4.4 Pre-installation Check 33
4.5 Moving the SmartGuard 34
4.6 Wall Mounting 34

5 Electrical Connections 37

5.1 Preparing Cables 38
5.2 Connecting a PE Cable 41
5.3 Opening the Maintenance Compartment 43
5.4 Installing the Grid AC Output Power Cable 45
5.5 Installing the Inverter AC Input Power Cable 46
5.6 Installing the Backup Load Output Power Cable 49

5.7 Installing the Non-backup Load Output Power Cable....52
5.8 Installing the SmartGuard Signal Cables....53
5.9 Installing the SmartGuard Signal Cables (EMMA)....55

6 System Commissioning....60
6.1 Check Before Power-On....60
6.2 Closing the Maintenance Compartment....61
6.3 System Power-On....62
6.3.1 Powering On the SmartGuard....62
6.3.2 Powering On Loads....65
6.4 Device Commissioning....66
6.4.1 Deploying a New Plant....67
6.4.2 Commissioning Functions....68
6.4.3 Whole-House Power Backup Settings (Seamless Switchover)....69
6.4.4 Setting Off-Grid Mode for the Inverter....71
6.4.5 (Optional) Setting the External WLAN Antenna....72
6.4.6 Generator Settings....73
6.5 On/Off-Grid Switching....75
6.5.1 Verifying On/Off-Grid Switching....75
6.5.2 Forced Switching....76

7 System Maintenance....78
7.1 System Power-Off....78
7.2 Routine Maintenance....79
7.3 Alarm Reference....80
7.4 Operations on the Bypass Switch of the SmartGuard....80
7.5 Replacing the SmartGuard....81

8 Technical Specifications....83

A Connecting to the Inverter on the App....86

B Upgrading the Inverter....88

C Connecting to the EMMA on the App....89

D ATS Parameter Requirements....91

E Generator Parameter Requirements....94

F Using Smart Appliances (Owner)....96
F.1 Commissioning the Charger....96
F.2 Smart Switch Commissioning....96
F.3 Generator Settings....98
F.4 Forced Switching for the SmartGuard....100

G Contact Information....102

H Digital Power Customer Service....104

I Preconfigured Certificate Disclaimer..... 105

J Acronyms and Abbreviations..... 106

SOLARONE.RO® SISTEME FOTOVOLTAICE

1 Safety Information

Statement

Before transporting, storing, installing, operating, using, and/or maintaining the equipment, read this document, strictly follow the instructions provided herein, and follow all the safety instructions on the equipment and in this document. In this document, "equipment" refers to the products, software, components, spare parts, and/or services related to this document; "the Company" refers to the manufacturer (producer), seller, and/or service provider of the equipment; "you" refers to the entity that transports, stores, installs, operates, uses, and/or maintains the equipment.

The **Danger**, **Warning**, **Caution**, and **Notice** statements described in this document do not cover all the safety precautions. You also need to comply with relevant international, national, or regional standards and industry practices. **The Company shall not be liable for any consequences that may arise due to violations of safety requirements or safety standards concerning the design, production, and usage of the equipment.**

The equipment shall be used in an environment that meets the design specifications. Otherwise, the equipment may be faulty, malfunctioning, or damaged, which is not covered under the warranty. The Company shall not be liable for any property loss, personal injury, or even death caused thereby.

Comply with applicable laws, regulations, standards, and specifications during transportation, storage, installation, operation, use, and maintenance.

Do not perform reverse engineering, decompilation, disassembly, adaptation, implantation, or other derivative operations on the equipment software. Do not study the internal implementation logic of the equipment, obtain the source code of the equipment software, violate intellectual property rights, or disclose any of the performance test results of the equipment software.

The Company shall not be liable for any of the following circumstances or their consequences:

- The equipment is damaged due to force majeure such as earthquakes, floods, volcanic eruptions, debris flows, lightning strikes, fires, wars, armed conflicts, typhoons, hurricanes, tornadoes, and other extreme weather conditions.
- The equipment is operated beyond the conditions specified in this document.

- The equipment is installed or used in environments that do not comply with international, national, or regional standards.
- The equipment is installed or used by unqualified personnel.
- You fail to follow the operation instructions and safety precautions on the product and in the document.
- You remove or modify the product or modify the software code without authorization.
- You or a third party authorized by you cause the equipment damage during transportation.
- The equipment is damaged due to storage conditions that do not meet the requirements specified in the product document.
- You fail to prepare materials and tools that comply with local laws, regulations, and related standards.
- The equipment is damaged due to your or a third party's negligence, intentional breach, gross negligence, or improper operations, or other reasons not related to the Company.

1.1 Personal Safety

DANGER

Ensure that power is off during installation. Do not install or remove a cable with power on. Transient contact between the core of the cable and the conductor will generate electric arcs or sparks, which may cause a fire or personal injury.

DANGER

Non-standard and improper operations on the energized equipment may cause fire, electric shocks, or explosion, resulting in property damage, personal injury, or even death.

DANGER

Before operations, remove conductive objects such as watches, bracelets, bangles, rings, and necklaces to prevent electric shocks.

DANGER

During operations, use dedicated insulated tools to prevent electric shocks or short circuits. The dielectric withstanding voltage level must comply with local laws, regulations, standards, and specifications.

WARNING

During operations, wear personal protective equipment such as protective clothing, insulated shoes, goggles, safety helmets, and insulated gloves.

Figure 1-1 Personal protective equipment

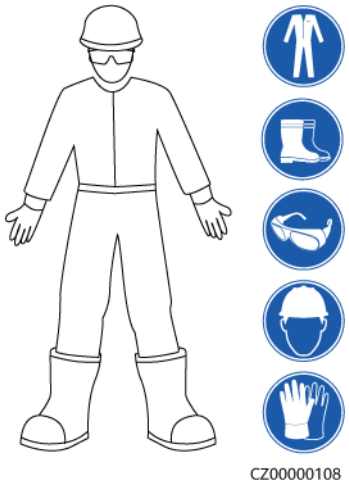

General Requirements

- Do not stop protective devices. Pay attention to the warnings, cautions, and related precautionary measures in this document and on the equipment.
- If there is a likelihood of personal injury or equipment damage during operations, immediately stop, report the case to the supervisor, and take feasible protective measures.
- Do not power on the equipment before it is installed or confirmed by professionals.
- Do not touch the power supply equipment directly or with conductors such as damp objects. Before touching any conductor surface or terminal, measure the voltage at the contact point to ensure that there is no risk of electric shock.
- Do not touch operating equipment because the enclosure is hot.
- Do not touch a running fan with your hands, components, screws, tools, or boards. Otherwise, personal injury or equipment damage may occur.
- In the case of a fire, immediately leave the building or the equipment area and activate the fire alarm or call emergency services. Do not enter the affected building or equipment area under any circumstances.

Personnel Requirements

- Only professionals and trained personnel are allowed to operate the equipment.
  - Professionals: personnel who are familiar with the working principles and structure of the equipment, trained or experienced in equipment operations and are clear of the sources and degree of various potential hazards in equipment installation, operation, maintenance

  - Trained personnel: personnel who are trained in technology and safety, have required experience, are aware of possible hazards on themselves in certain operations, and are able to take protective measures to minimize the hazards on themselves and other people
- Personnel who plan to install or maintain the equipment must receive adequate training, be able to correctly perform all operations, and understand all necessary safety precautions and local relevant standards.
- Only qualified professionals or trained personnel are allowed to install, operate, and maintain the equipment.
- Only qualified professionals are allowed to remove safety facilities and inspect the equipment.
- Personnel who will perform special tasks such as electrical operations, working at heights, and operations of special equipment must possess the required local qualifications.
- Only authorized professionals are allowed to replace the equipment or components (including software).
- Only personnel who need to work on the equipment are allowed to access the equipment.

1.2 Electrical Safety

DANGER

Before connecting cables, ensure that the equipment is intact. Otherwise, electric shocks or fire may occur.

DANGER

Non-standard and improper operations may result in fire or electric shocks.

DANGER

Prevent foreign matter from entering the equipment during operations. Otherwise, equipment short-circuits or damage, load power derating, power failure, or personal injury may occur.

WARNING

For the equipment that needs to be grounded, install the ground cable first when installing the equipment and remove the ground cable last when removing the equipment.

WARNING

During the installation of PV strings and the inverter, the positive or negative terminals of PV strings may be short-circuited to ground if the power cables are not properly installed or routed. In this case, an AC or DC short circuit may occur and damage the inverter. The resulting device damage is not covered under any warranty.

CAUTION

Do not route cables near the air intake or exhaust vents of the equipment.

General Requirements

- Follow the procedures described in the document for installation, operation, and maintenance. Do not reconstruct or alter the equipment, add components, or change the installation sequence without permission.
- Obtain approval from the national or local electric utility company before connecting the equipment to the grid.
- Observe the power plant safety regulations, such as the operation and work ticket mechanisms.
- Install temporary fences or warning ropes and hang "No Entry" signs around the operation area to keep unauthorized personnel away from the area.
- Before installing or removing power cables, turn off the switches of the equipment and its upstream and downstream switches.
- Before performing operations on the equipment, check that all tools meet the requirements and record the tools. After the operations are complete, collect all of the tools to prevent them from being left inside the equipment.
- Before installing power cables, check that cable labels are correct and cable terminals are insulated.
- When installing the equipment, use a torque tool of a proper measurement range to tighten the screws. When using a wrench to tighten the screws, ensure that the wrench does not tilt and the torque error does not exceed 10% of the specified value.
- Ensure that bolts are tightened with a torque tool and marked in red and blue after double-check. Installation personnel mark tightened bolts in blue. Quality inspection personnel confirm that the bolts are tightened and then mark them in red. (The marks must cross the edges of the bolts.)

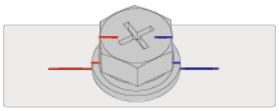

CZ0000112

- If the equipment has multiple inputs, disconnect all the inputs before operating the equipment.
- Before maintaining a downstream electrical or power distribution device, turn off the output switch on the power supply equipment.

- During equipment maintenance, attach "Do not switch on" labels near the upstream and downstream switches or circuit breakers as well as warning signs to prevent accidental connection. The equipment can be powered on only after troubleshooting is complete.
- Do not open equipment panels.
- Check equipment connections periodically, ensuring that all screws are securely tightened.
- Only qualified professionals can replace a damaged cable.
- Do not scrawl, damage, or block any labels or nameplates on the equipment. Promptly replace labels that have worn out.
- Do not use solvents such as water, alcohol, or oil to clean electrical components inside or outside of the equipment.

Grounding

- Ensure that the grounding impedance of the equipment complies with local electrical standards.
- Ensure that the equipment is connected permanently to the protective ground. Before operating the equipment, check its electrical connection to ensure that it is reliably grounded.
- Do not work on the equipment in the absence of a properly installed ground conductor.
- Do not damage the ground conductor.

Cabling Requirements

- When selecting, installing, and routing cables, follow local safety regulations and rules.
- When routing power cables, ensure that there is no coiling or twisting. Do not join or weld power cables. If necessary, use a longer cable.
- Ensure that all cables are properly connected and insulated, and meet specifications.
- Ensure that the slots and holes for routing cables are free from sharp edges, and that the positions where cables are routed through pipes or cable holes are equipped with cushion materials to prevent the cables from being damaged by sharp edges or burrs.
- Ensure that cables of the same type are bound together neatly and straight and that the cable sheath is intact. When routing cables of different types, ensure that they are away from each other without entanglement and overlapping.
- Secure buried cables using cable supports and cable clips. Ensure that the cables in the backfill area are in close contact with the ground to prevent cable deformation or damage during backfilling.
- If the external conditions (such as the cable layout or ambient temperature) change, verify the cable usage in accordance with the IEC-60364-5-52 or local laws and regulations. For example, check that the current-carrying capacity meets requirements.
- When routing cables, reserve at least 30 mm clearance between the cables and heat-generating components or areas. This prevents deterioration or damage to the cable insulation layer.

1.3 Environment Requirements

DANGER

Do not expose the equipment to flammable or explosive gas or smoke. Do not perform any operation on the equipment in such environments.

DANGER

Do not store any flammable or explosive materials in the equipment area.

DANGER

Do not place the equipment near heat sources or fire sources, such as smoke, candles, heaters, or other heating devices. Overheat may damage the equipment or cause a fire.

WARNING

Install the equipment in an area far away from liquids. Do not install it under areas prone to condensation, such as under water pipes and air exhaust vents, or areas prone to water leakage, such as air conditioner vents, ventilation vents, or feeder windows of the equipment room. Ensure that no liquid enters the equipment to prevent faults or short circuits.

WARNING

To prevent damage or fire due to high temperature, ensure that the ventilation vents or heat dissipation systems are not obstructed or covered by other objects while the equipment is running.

General Requirements

- Store the equipment according to the storage requirements. Equipment damage caused by unqualified storage conditions is not covered under the warranty.
- Keep the installation and operating environments of the equipment within the allowed ranges. Otherwise, its performance and safety will be compromised.
- The operating temperature range provided in the equipment's technical specifications refers to the ambient temperatures in equipment's installation environment.

- Do not install, use, or operate outdoor equipment and cables (including but not limited to moving equipment, operating equipment and cables, inserting connectors to or removing connectors from signal ports connected to outdoor facilities, working at heights, performing outdoor installation, and opening doors) in harsh weather conditions such as lightning, rain, snow, and level 6 or stronger wind.
- Do not install the equipment in an environment with dust, smoke, volatile or corrosive gases, infrared and other radiations, organic solvents, or salty air.
- Do not install the equipment in an environment with conductive metal or magnetic dust.
- Do not install the equipment in an area conducive to the growth of microorganisms such as fungus or mildew.
- Do not install the equipment in an area with strong vibration, noise, or electromagnetic interference.
- Ensure that the site complies with local laws, regulations, and related standards.
- Ensure that the ground in the installation environment is solid, free from spongy or soft soil, and not prone to subsidence. The site must not be located in a low-lying land prone to water or snow accumulation, and the horizontal level of the site must be above the highest water level of that area in history.
- Do not install the equipment in a position that may be submerged in water.
- If the equipment is installed in a place with abundant vegetation, in addition to routine weeding, harden the ground underneath the equipment using cement or gravel (the area shall be greater than or equal to 3 m x 2.5 m).
- Do not install the equipment outdoors in salt-affected areas because it may be corroded. A salt-affected area refers to the region within 500 m of the coast or prone to sea breeze. Regions prone to sea breeze vary with weather conditions (such as typhoons and monsoons) or terrains (such as dams and hills).
- Before installation, operation, and maintenance, clean up any water, ice, snow, or other foreign objects on the top of the equipment.
- When installing the equipment, ensure that the installation surface is solid enough to bear the weight of the equipment.
- After installing the equipment, remove the packing materials such as cartons, foam, plastics, and cable ties from the equipment area.

1.4 Mechanical Safety

WARNING

Ensure that all necessary tools are ready and inspected by a professional organization. Do not use tools that have signs of scratches or fail to pass the inspection or whose inspection validity period has expired. Ensure that the tools are secure and not overloaded.

WARNING

Do not drill holes into the equipment. Doing so may affect the sealing performance and electromagnetic containment of the equipment and damage components or cables inside. Metal shavings from drilling may short-circuit boards inside the equipment.

General Requirements

- Repaint any paint scratches caused during equipment transportation or installation in a timely manner. Equipment with scratches must not be exposed for an extended period of time.
- Do not perform operations such as arc welding and cutting on the equipment without evaluation by the Company.
- Do not install other devices on the top of the equipment without evaluation by the Company.
- When performing operations over the top of the equipment, take measures to protect the equipment against damage.
- Use correct tools and operate them in the correct way.

Moving Heavy Objects

- Be cautious to prevent injury when moving heavy objects.

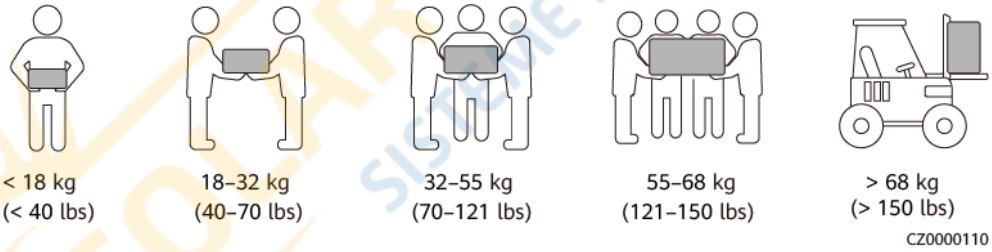

- If multiple persons need to move a heavy object together, determine the manpower and work division with consideration of height and other conditions to ensure that the weight is equally distributed.
- If two persons or more move a heavy object together, ensure that the object is lifted and landed simultaneously and moved at a uniform pace under the supervision of one person.
- Wear personal protective gears such as protective gloves and shoes when manually moving the equipment.
- To move an object by hand, approach to the object, squat down, and then lift the object gently and stably by the force of the legs instead of your back. Do not lift it suddenly or turn your body around.
- Do not quickly lift a heavy object above your waist. Place the object on a workbench that is half-waist high or any other appropriate place, adjust the positions of your palms, and then lift it.
- Move a heavy object stably with balanced force at an even and low speed. Put down the object stably and slowly to prevent any collision or drop from scratching the surface of the equipment or damaging the components and cables.

- When moving a heavy object, be aware of the workbench, slope, staircase, and slippery places. When moving a heavy object through a door, ensure that the door is wide enough to move the object and avoid bumping or injury.
- When transferring a heavy object, move your feet instead of turning your waist around. When lifting and transferring a heavy object, ensure that your feet point to the target direction of movement.
- When transporting the equipment using a pallet truck or forklift, ensure that the tynes are properly positioned so that the equipment does not topple. Before moving the equipment, secure it to the pallet truck or forklift using ropes. When moving the equipment, assign dedicated personnel to take care of it.
- Choose sea, roads in good conditions, or airplanes for transportation. Do not transport the equipment by railway. Avoid tilt or jolt during transportation.

Using Ladders

- Use wooden or insulated ladders when you need to perform live-line working at heights.
- Platform ladders with protective rails are preferred. Single ladders are not recommended.
- Before using a ladder, check that it is intact and confirm its load bearing capacity. Do not overload it.
- Ensure that the ladder is securely positioned and held firm.

- When climbing up the ladder, keep your body stable and your center of gravity between the side rails, and do not overreach to the sides.
- When a step ladder is used, ensure that the pull ropes are secured.
- If a single ladder is used, the recommended angle for the ladder against the floor is 75 degrees, as shown in the following figure. A square can be used to measure the angle.

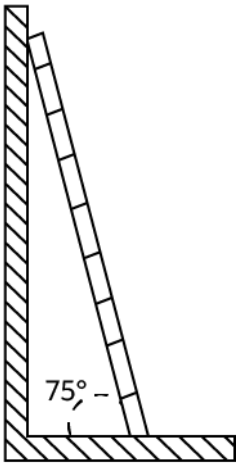

- If a single ladder is used, ensure that the wider end of the ladder is at the bottom, and take protective measures to prevent the ladder from sliding.
- If a single ladder is used, do not climb higher than the fourth rung of the ladder from the top.
- If you use a single ladder to climb up to a platform, ensure that the ladder is at least 1 m higher than the platform.

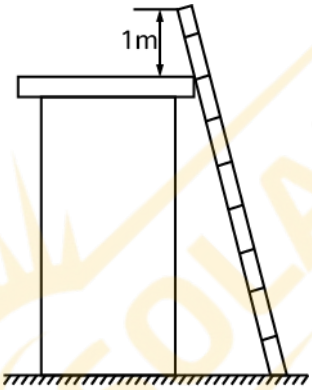

Hoisting

- Only trained and qualified personnel are allowed to perform hoisting operations.
- Install temporary warning signs or fences to isolate the hoisting area.
- Ensure that the foundation where hoisting is performed on meets the load-bearing requirements.
- Before hoisting objects, ensure that hoisting tools are firmly secured onto a fixed object or wall that meets the load-bearing requirements.
- During hoisting, do not stand or walk under the crane or the hoisted objects.
- Do not drag steel ropes and hoisting tools or bump the hoisted objects against hard objects during hoisting.
- Ensure that the angle between two hoisting ropes is no more than 90 degrees, as shown in the following figure.

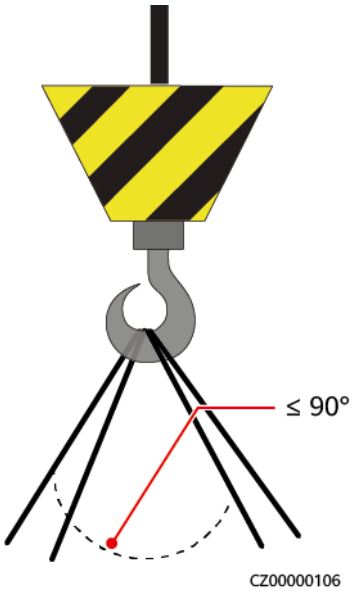

Drilling Holes

- Obtain consent from the customer and contractor before drilling holes.
- Wear protective equipment such as safety goggles and protective gloves when drilling holes.
- To avoid short circuits or other risks, do not drill holes into buried pipes or cables.
- When drilling holes, protect the equipment from shavings. After drilling, clean up any shavings.

2 Product Description

Functions

- The SmartGuard can implement on/off-grid switching and load management. Its main function is to switch the inverter between on-grid and off-grid modes. When the grid is available, the inverter works in on-grid mode, and the grid and inverter ensure power supply to both backup loads and non-backup loads. When the grid fails, the inverter quickly switches to off-grid mode and supplies power to only backup loads. If the power plant is equipped with a generator, when the SOC of the energy storage system (ESS) is lower than **ESS SOC Threshold for Starting Up Generator**, the generator starts and supplies power to backup loads and non-backup loads. At the same time, the surplus power generated by the generator can be used to charge the ESS. When the SOC of the ESS reaches **ESS SOC Threshold for Shutting Down Generator**, the generator shuts down and the ESS supplies power to only backup loads. After the grid recovers, the inverter automatically switches to grid-tied mode.
- The seamless switching function of the SmartGuard needs to be manually enabled. If the function is enabled, the system where an MAP0 inverter is installed will switch to off-grid mode within 20 ms after the grid fails or becomes abnormal, ensuring uninterruptible power supply to IT equipment such as computers connected to the backup load port. For details, see **6.4.3 Whole-House Power Backup Settings (Seamless Switchover)**.
- The SmartGuard has a built-in EMMA, which can connect to PV, ESSs, smart chargers, and smart loads. In addition to unified scheduling of home energy, the EMMA can connect to smart loads such as chargers, SG Ready heat pumps, and smart switches. Users can set the reservation time to charge vehicles and heat water in advance at the specified time. In addition, users can set PV energy usage priorities for devices as required to make the best use of PV energy.

2.1 Model Number Description

This document involves the following product models:

- SmartGuard-63A-T0
- SmartGuard-63A-AUT0

 Copyright © Huawei Digital Power Technologies Co., Ltd.

Figure 2-1 Model number

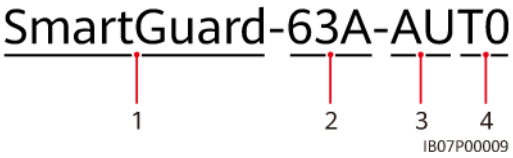

Table 2-1 Model number description

No.	Item	Description
1	Product family name	SmartGuard: Whole Home Backup
2	Maximum current	63A: The total load current is less than or equal to 63 A. The maximum current of the grid port is 63 A.
3	Region	AU: Australia/New Zealand/South Africa
4	Product code	T0: Three-phase Whole Home Backup system

2.2 Networking

Classification of Loads Connected to the SmartGuard

CAUTION

- If the power of backup loads exceeds the maximum off-grid power of the system, the inverter may be shut down due to overload. In this case, you need to shut down some loads. Alternatively, connect loads with lower priority to the non-backup load port.
- If the generator deployed in the power plant runs in off-grid mode and the load power exceeds the generator capacity, the generator may shut down due to overload. You are advised to shut down some loads.
- If the main circuit breaker's rating is 63 A or less, you can connect all or some of the loads to the SmartGuard. However, if the rating is greater than 63 A, you can connect only some of the loads to the SmartGuard.

Step 1 Residential load classification (dashed boxes indicate optional components)

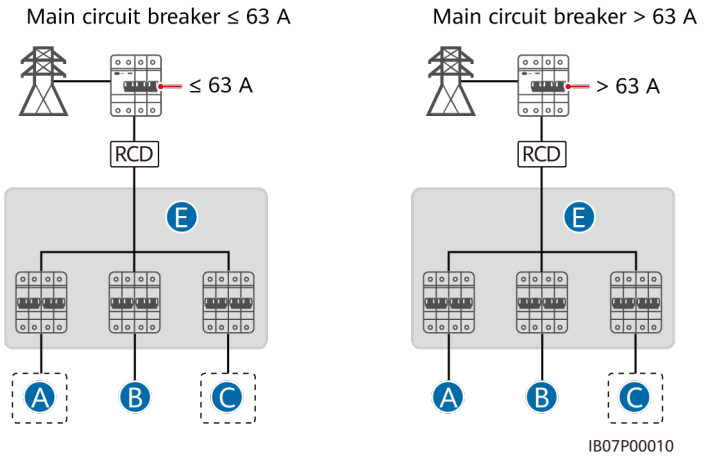

Main Circuit Breaker	Connect All Loads to the SmartGuard	Connect Some of Loads to the SmartGuard
≤ 63 A	Supported	Supported
> 63 A	Not supported	Supported

Step 2 Classification of loads connected to the SmartGuard (dashed boxes indicate optional components)

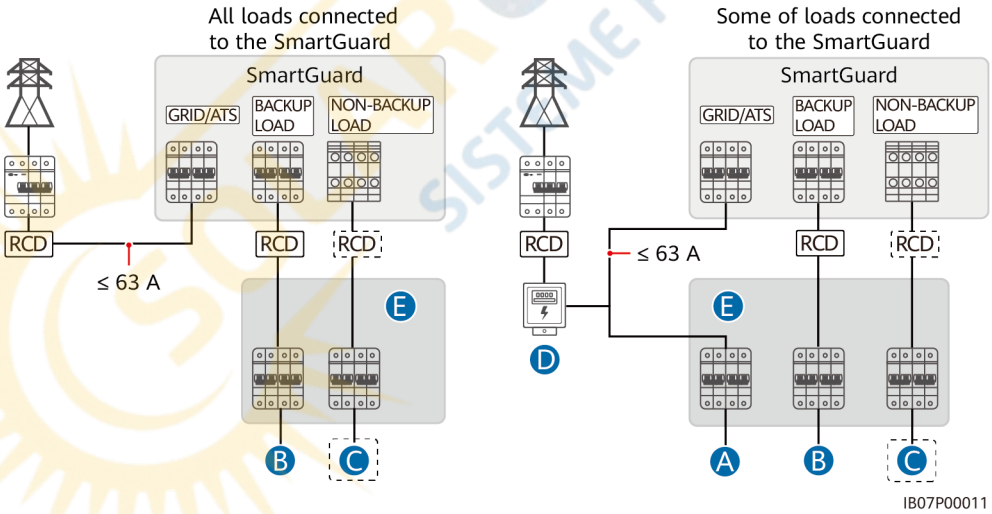

(A) Load not connected to the SmartGuard

(B) Backup load

(C) Non-backup load

(D) Power meter

(E) AC power distribution box

----End

Residential Wiring Diagrams

Figure 2-2 SmartGuard-63A-T0 residential wiring diagram (dashed lines indicate optional cable connections)

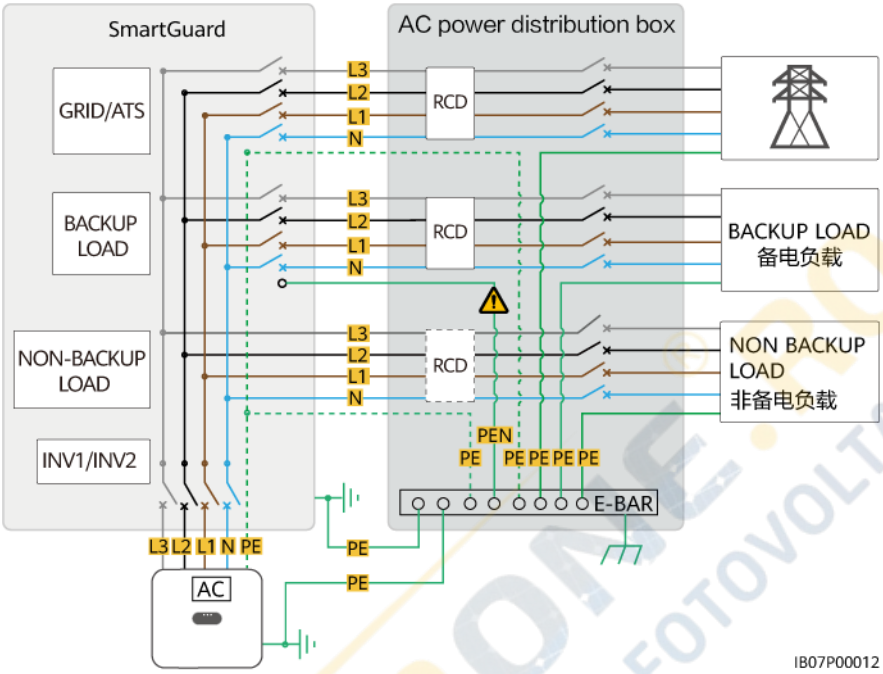

NOTE

The PEN cable with ⚠ must be connected to the PE bar of the AC power distribution box.

Figure 2-3 SmartGuard-63A-AUT0 residential wiring diagram (dashed lines indicate optional cable connections)

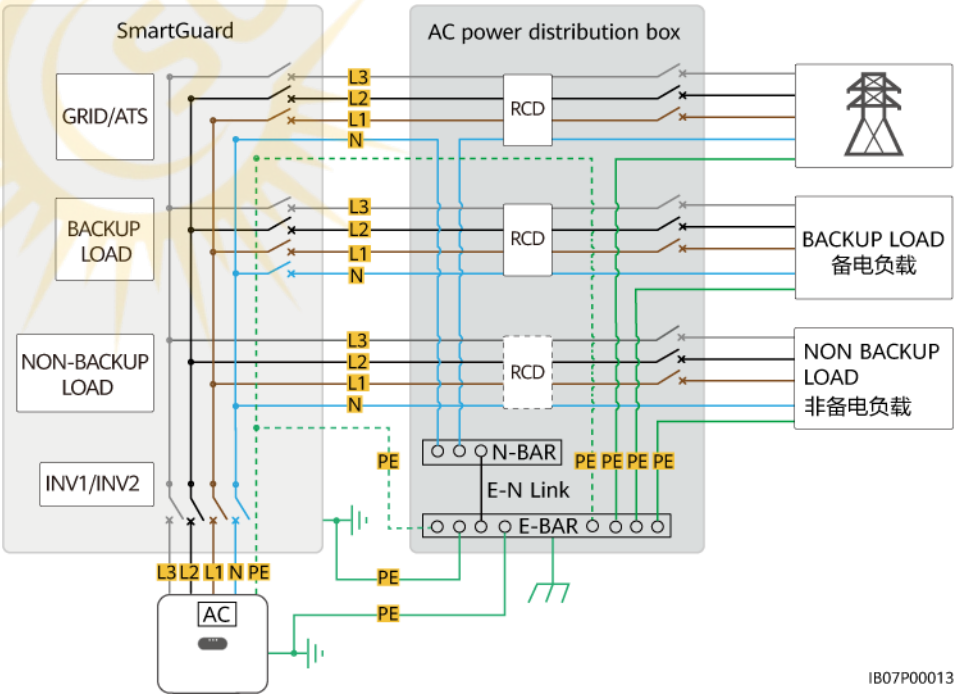

Networking

The SmartGuard is used in a residential rooftop on/off-grid system. The system consists of the PV strings, ESS, inverter, SmartGuard, grid, generator, and loads.

Figure 2-4 Networking with all loads connected to the SmartGuard (dashed boxes indicate optional components)

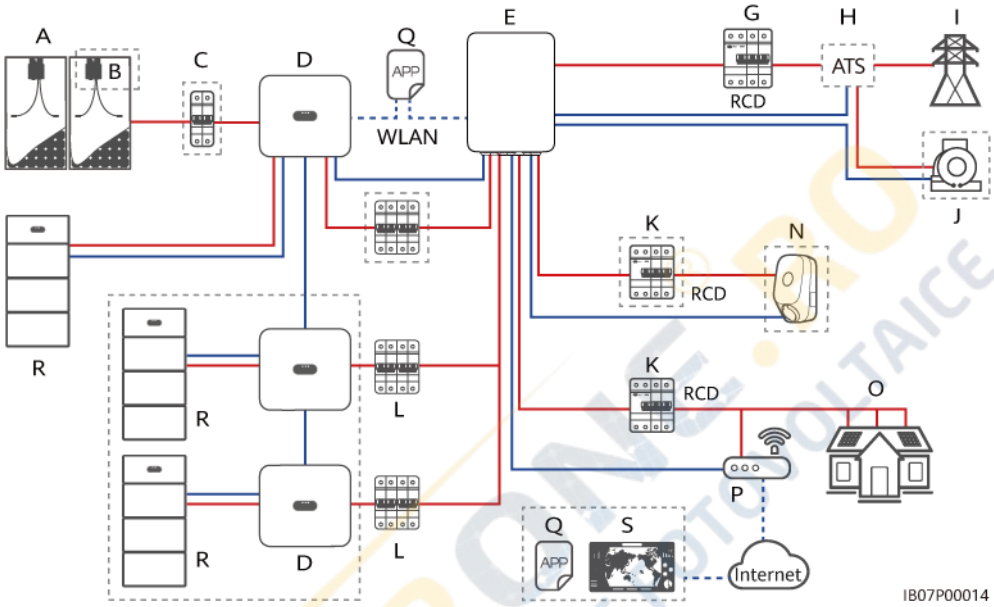

Figure 2-5 Networking with some of loads connected to the SmartGuard (dashed boxes indicate optional components)

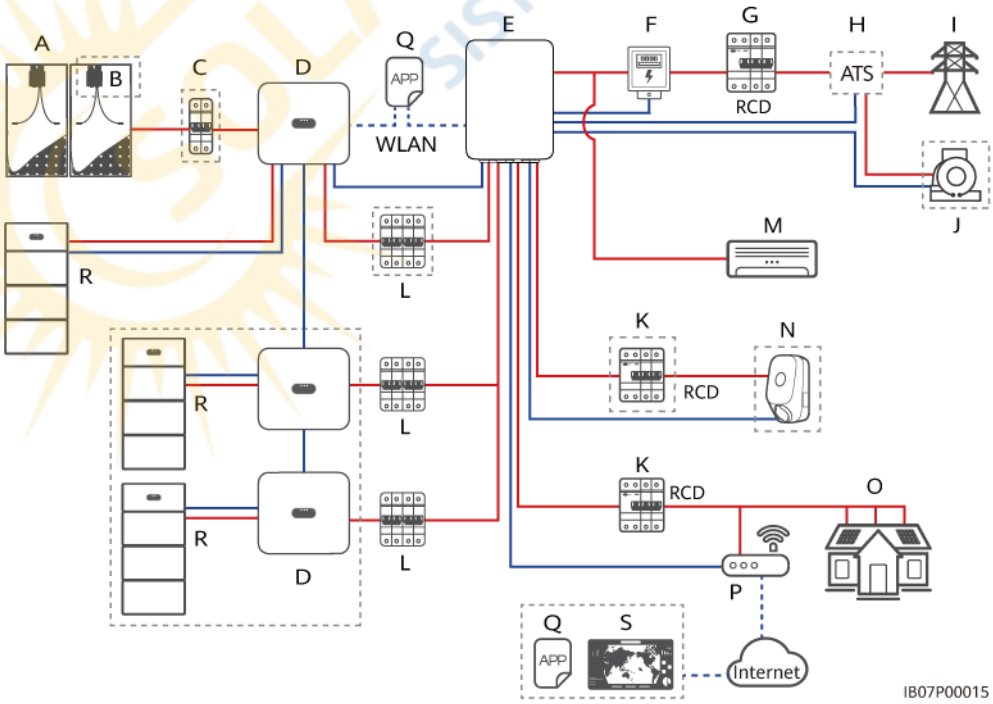

(A) PV string (B) Smart PV Optimizer (C) DC switch

(D) SUN2000	(E) SmartGuard	(F) Power meter
(G) Main circuit breaker	(H) ATS	(I) Power grid
(J) Generator	(K) Residual current device (RCD)	(L) AC switch of the inverter
(M) Load not connected to the SmartGuard	(N) Non-backup load	(O) Backup load
(P) Router	(Q) FusionSolar app	(R) LUNA2000
(S) FusionSolar Smart PV Management System (SmartPVMS)		

DANGER

- An RCD must be installed for the backup load. During off-grid operation, the main circuit breaker does not provide protection. Electric leakage on the loads may result in electric shocks.
- A main circuit breaker with the leakage protection function must be installed. Its rated residual operating current must be ≥ Number of M1 or MAP0 inverters x 100 mA or ≥ Number of MB0 inverters x 300 mA.
- A maximum of three MAP0 inverters can be connected in parallel. If two MAP0 inverters need to connect to the same port, connect them in parallel first.

NOTE

- — indicates a power cable, — indicates a signal cable, and - - - indicates wireless communication.

  Only MAP0 inverters can be connected to a generator.
- The seamless switching function of the SmartGuard needs to be manually enabled. If the function is enabled, the system where an MAP0 inverter is installed will switch to off-grid mode within 20 ms after the grid fails or becomes abnormal, ensuring uninterruptible power supply to IT equipment such as computers connected to the backup load port. For details, see **6.4.3 Whole-House Power Backup Settings (Seamless Switchover)**.
- If a charger is configured, the charger must be installed on a non-backup load port.
- The SmartGuard has a built-in EMMA. The EMMA can be connected to the router through the FE or WLAN port. If WLAN is used, the router must be close to the SmartGuard.
- One charger can be connected to the EMMA through the FE port or connected to the router through the FE or WLAN port. Two chargers must be connected to the router only through the FE or WLAN port. Do not connect one charger to the EMMA and the other charger to the router respectively at the same time.
- When the SG Ready heat pump provides 12 V power supply, the EMMA directly controls the heat pump. When the SG Ready heat pump cannot provide 12 V power supply, the EMMA controls the heat pump through an external relay.
- The EMMA allows smart appliances (including smart sockets, smart circuit breakers, and smart relays) to connect to the router through the FE or WLAN port. For details about how to install the smart appliances, see **Residential Smart PV Solution User Manual (EMMA)**.

System Power in Off-Grid Mode

1. The maximum power of the system in off-grid mode depends on the ESS capacity and the inverter off-grid power. The following describes the maximum power of the system in off-grid mode using an inverter with the off-grid power of 8 kW and an ESS with the capacity of 21 kWh as an example.

NOTICE

- Power supply priority in off-grid mode: PV power generation > ESS discharge > generator power generation
- The ESS models in the same power plant must be the same. For details about ESS capacity configuration, see **LUNA2000-(5-30)-S0 User Manual** and **LUNA2000-(7, 14, 21)-S1 User Manual**.

Figure 2-6 Illustration of maximum power in off-grid mode

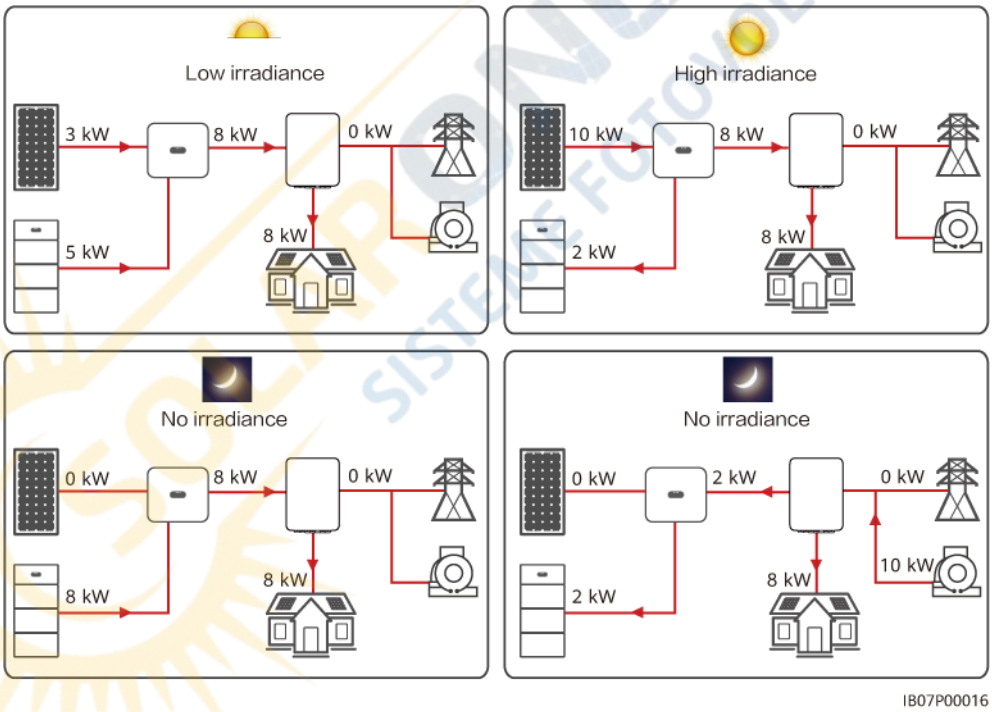

2. Off-grid power of inverters

Table 2-2 SUN2000-(3KTL-12KTL)-M1

Parameter	SUN2000-3KTL-M1	SUN2000-5KTL-M1	SUN2000-6KTL-M1	SUN2000-8KTL-M1	SUN2000-10KTL-M1	SUN2000-12KTL-M1
Off-grid power	3000 W	3300 W	3300 W	3300 W	3300 W	3300 W

 Copyright © Huawei Digital Power Technologies Co., Ltd.

Table 2-3 SUN2000-(12KTL-25KTL)-MB0

Parameter	SUN2000-12K-MB0	SUN2000-15K-MB0	SUN2000-17K-MB0	SUN2000-20K-MB0	SUN2000-25K-MB0
Off-grid power	8300 W	8300 W	8300 W	8300 W	8300 W

Table 2-4 SUN5000-(17KTL, 25KTL)-MB0

Parameter	SUN5000-17K-MB0	SUN5000-25K-MB0
Off-grid power	8300 W	8300 W

Table 2-5 SUN2000-(5KTL-12KTL)-MAP0

Parameter	SUN2000-5K-MAP0	SUN2000-6K-MAP0	SUN2000-8K-MAP0	SUN2000-10K-MAP0	SUN2000-12K-MAP0
Off-grid power	5000 W	6000 W	8000 W	10,000 W	12,000 W

Table 2-6 SUN5000-(8KTL, 12KTL)-MAP0

Parameter	SUN5000-8K-MAP0	SUN5000-12K-MAP0
Off-grid power	8000 W	12,000 W

Residential Load Features

1. When the inverter is off-grid, the peak load current and duration shall not exceed the off-grid running capability of the inverter. The stable running of the system is affected by both the continuous load power and the inrush current during load startup.
2. To ensure that loads can start and run properly, do not start the following typical devices at the same time.

Table 2-7 Residential load features

Load Feature	Load	Cause
High startup current (motor)	Air conditioners, electric saws, and pumps	Load startup requires a high startup current, which may exceed the maximum output current of the inverter. Although the load power is within the off-grid operating power range of the inverter, the loads may fail to start.
Dynamic power	Washing machines, soy milk makers, rice cookers, and electric ovens	When the system is running properly, the power of adjacent running loads is fluctuating.
High harmonic current	Induction cookers and hair dryers	The non-sinusoidal current may cause total harmonic distortion of output voltage (THDv).

Supported Earthing Systems

The SmartGuard supports TN-S, TN-C-S, and TT systems. In the TT power grid, the N-to-PE voltage must be less than 30 V.

Figure 2-7 Earthing systems

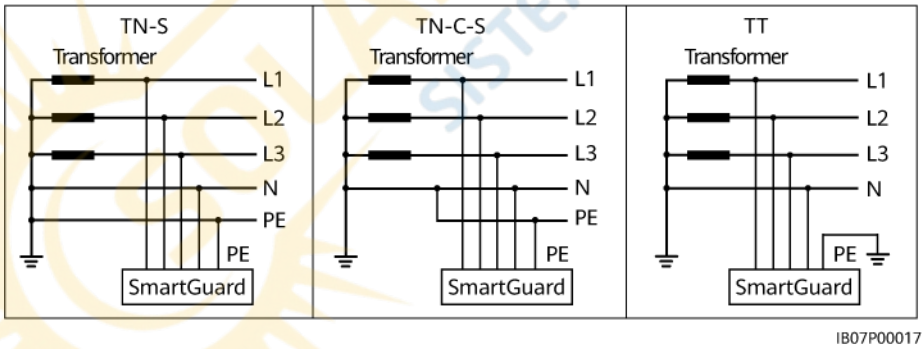

2.3 Appearance

Appearance and Ports

Figure 2-8 Appearance and ports

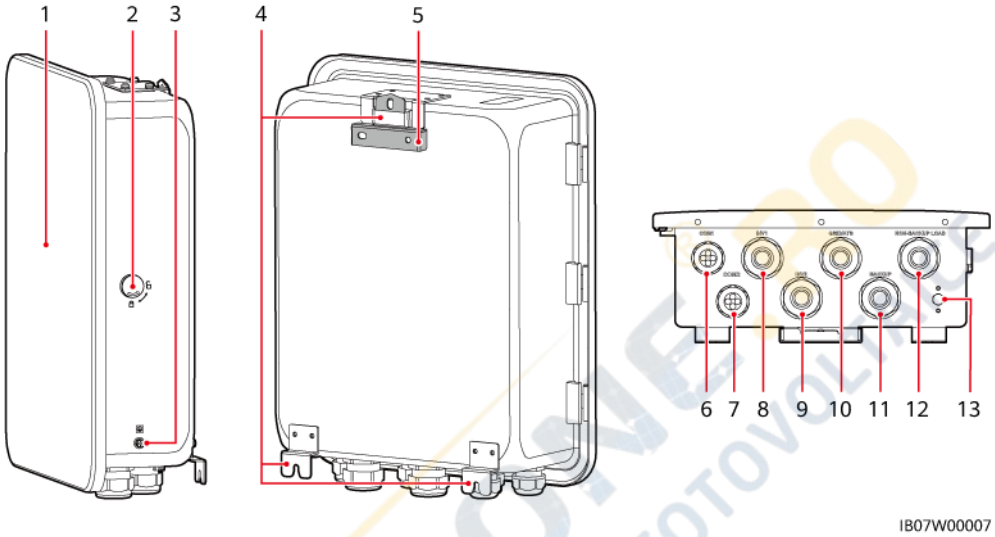

(1) Maintenance compartment door[a]

(2) Lock

(3) Ground screw

(4) Mounting kits

(5) Mounting bracket

(6) Communications port (COM1)

(7) Communications port (COM2)

(8) Inverter AC input port (INV1 63A)

(9) Inverter AC input port (INV2 32A)

(10) Grid AC output port (GRID/ATS)

(11) Backup load port (BACKUP LOAD)

(12) Non-backup load port (NON-BACKUP LOAD)

(13) Ventilation valve

NOTE

Note a: Before opening the maintenance compartment door, turn off the main circuit breaker on the grid side, shut down the inverter, and turn off the DC switches of the inverter and ESS.

 Copyright © Huawei Digital Power Technologies Co., Ltd.

Maintenance Compartment and Wiring Terminals

Figure 2-9 Maintenance compartment and wiring terminals

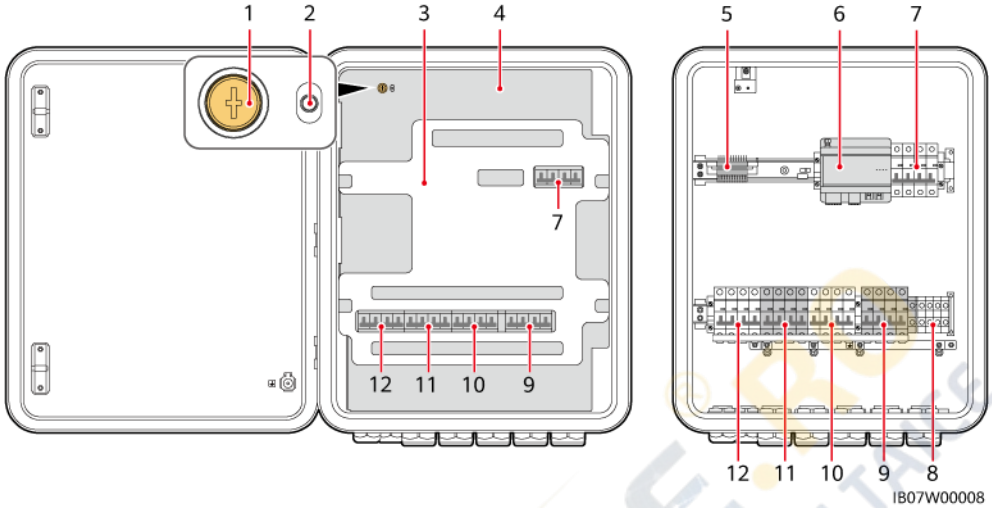

(1) Screw on the maintenance compartment cover	(2) LED indicator
(3) Cushioning material[c]	(4) Maintenance compartment cover[a]
(5) Signal cable terminal of the SmartGuard	(6) EMMA
(7) Bypass switch[b]	(8) Non-backup load terminal (NON-BACKUP LOAD)
(9) Backup load terminal (BACKUP LOAD)	(10) Grid AC output terminal (GRID/ATS)
(11) Inverter AC input terminal 2 (INV2)	(12) Inverter AC input terminal 1 (INV1)

WARNING

Note a: Only authorized personnel can open the maintenance compartment cover to perform electrical connections.

Note b: During deployment and normal use, do not operate the bypass switch. Ensure that the bypass switch is off.

NOTE

Note c: Dispose of the removed cushioning material according to waste sorting regulations.

 Copyright © Huawei Digital Power Technologies Co., Ltd.

2.4 Working Principles

Figure 2-10 Electrical diagram of the SmartGuard

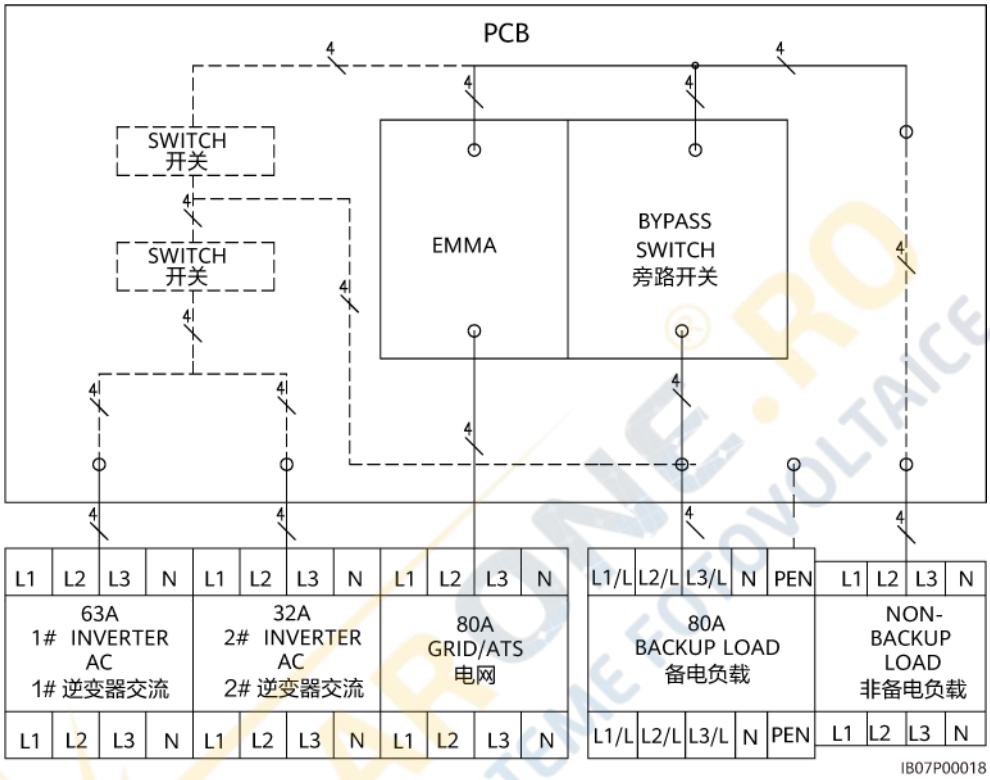

2.5 Working Modes

- The SmartGuard can work in three modes: on-grid, off-grid, and generator off-grid.
- Power supply priority: on-grid > off-grid > generator off-grid

Figure 2-11 Working modes

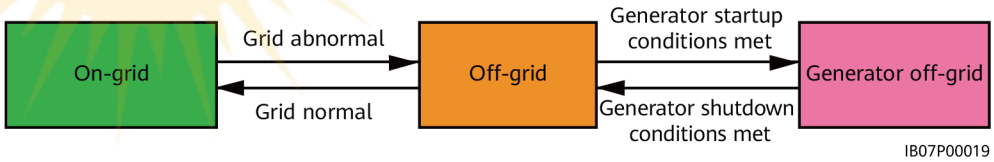

Table 2-8 Working mode switching

Switching Mode	Description
Automatic switching	• The SmartGuard automatically switches the working mode based on actual conditions and working conditions. • Seamless switching from on-grid mode to off-grid mode can be enabled or disabled. For details, see **6.4.3 Whole-House Power Backup Settings (Seamless Switchover)**.
Forced switching	• If you tap **Switch** when the system is in on-grid mode, the system forcibly switches to the off-grid mode. If the system is faulty or manually switched back to the on-grid mode, the system automatically exits the forced switching mode. • If you tap **Switch** when the system is in off-grid mode, the system attempts to switch to the on-grid mode and automatically exits the forced switching mode. • For details, see **6.5.2 Forced Switching**.

2.6 Label Description

Enclosure Labels

Table 2-9 Enclosure label description

Label	Name	Description
	Electric shock warning	Only authorized personnel can open the maintenance compartment cover.
	Refer to documentation	Reminds operators to read the user manual of the SmartGuard.

Label	Name	Description
	Operation warning	• During deployment and normal use, do not operate the bypass switch. Ensure that the bypass switch is off. • If the SmartGuard is abnormal and cannot work, consult the customer service personnel and refer to **7.4 Operations on the Bypass Switch of the SmartGuard**. Improper operations may cause electric shocks.
	Electric shock warning	Cut off power supply and remove metal objects such as watches and rings before maintenance.
	Delayed discharge	• High voltage exists after the SmartGuard is powered on. Only qualified and trained electrical technicians are allowed to install and operate the SmartGuard. • Residual voltage exists after the SmartGuard is powered off. It takes 5 minutes for the SmartGuard to discharge to the safe voltage.
	Burn warning	Do not touch the SmartGuard, as the enclosure is hot when the SmartGuard is running.
	Grounding warning	Ground the SmartGuard before powering it on.
	ESD label	Do not touch the boards in the SmartGuard.
	QR code for WLAN connection	Scan the QR code to connect to the WLAN of the SmartGuard.
	Grounding	Indicates the position for connecting the PE cable.

Product Nameplate

Figure 2-12 Nameplate (SmartGuard-63A-T0 as an example)

(1) Trademark and model

(2) QR code for accessing product documentation

(3) Key technical specifications

(4) Compliance symbols

(5) Company name and country of origin

NOTE

The nameplate figure is for reference only.

3 Storage Requirements

If the SmartGuard is not put into use immediately, the following requirements must be met when the SmartGuard is stored:

- Do not unpack the SmartGuard.
- Keep the storage temperature at –40°C to +70°C and the humidity at 5%–95% RH.
- Store the SmartGuard in a clean and dry place and protect it from dust and moisture.
- The SmartGuard can be stacked in a maximum of six layers. To avoid personal injury or device damage, stack the SmartGuard with caution to prevent them from falling over.
- During the storage period, check the SmartGuard periodically (recommended: once every three months). Replace the packing materials that are damaged by insects or rodents in a timely manner.
- If the SmartGuard has been stored for two years or longer, it must be checked and tested by professionals before use.

4 System Installation

4.1 Installation Modes

The SmartGuard can be installed on a wall.

Table 4-1 Installation modes

Installation Mode	Screw Specifications	Description
Wall mounting	M6x60 stainless steel expansion bolt	Delivered with the product

4.2 Installation Position

4.2.1 Site Selection Requirements

Basic Requirements

- The SmartGuard is protected to IP55 and can be installed indoors or outdoors.
- Do not install the SmartGuard in a position where it is easy to touch because the enclosure temperature is high when the SmartGuard is running.
- Do not install the SmartGuard near flammable or explosive materials.
- Keep the SmartGuard out of reach of children.
- The SmartGuard will be corroded in salt-affected areas, and the salt corrosion may cause fire. Do not install the SmartGuard outdoors in salt-affected areas. A salt-affected area refers to the region within 500 m of the coast or prone to sea breeze. Regions prone to sea breeze vary with weather conditions (such as typhoons and monsoons) or terrains (such as dams and hills).
- Install the SmartGuard in a well-ventilated environment to ensure good heat dissipation.
- You are advised to install the SmartGuard in a sheltered area or install an awning over it.

- Do not install the SmartGuard in a place with direct sunlight exposure. Otherwise, the capacity may decrease or overtemperature protection may be triggered.
- It is recommended that the SmartGuard be installed beside the AC power distribution box and be far away from the rest area. When the SmartGuard performs on/off-grid switchover, a click sound is generated.

Mounting Structure Requirements

- Ensure that the structure where the SmartGuard is installed is fireproof.
- Do not install the SmartGuard on flammable building materials.
- Verify that the surface on which the SmartGuard is installed is strong enough to bear the weight of the SmartGuard.
- In residential areas, do not install the SmartGuard on a drywall or wall made of similar materials which have a weak sound insulation performance to avoid disturbing residents.

4.2.2 Clearance Requirements

Installation Clearance Requirements

- Dimensions of mounting holes for the SmartGuard

Figure 4-1 Mounting bracket dimensions

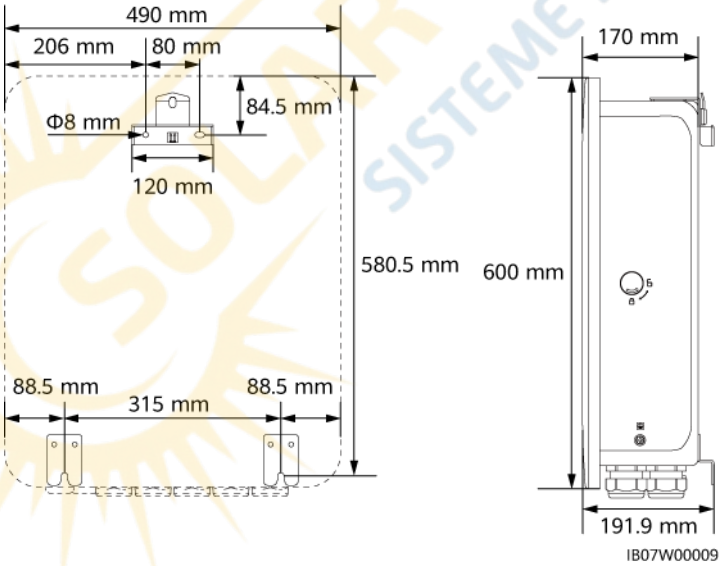

- Reserve sufficient clearances around the device for installation, door opening and closing, and heat dissipation.

Figure 4-2 Clearances

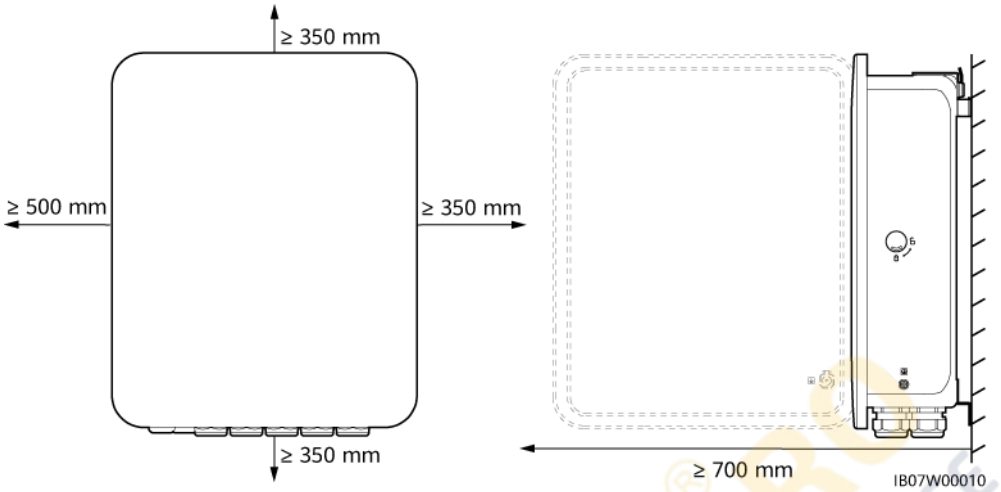

4.2.3 Angle Requirements

The installation angle requirements are as follows:

- Install the SmartGuard vertically or at a maximum back tilt of 15 degrees to facilitate heat dissipation.
- Do not install the SmartGuard at forward tilted, excessive backward tilted, side tilted, horizontal, or upside down positions.

Figure 4-3 Installation angle

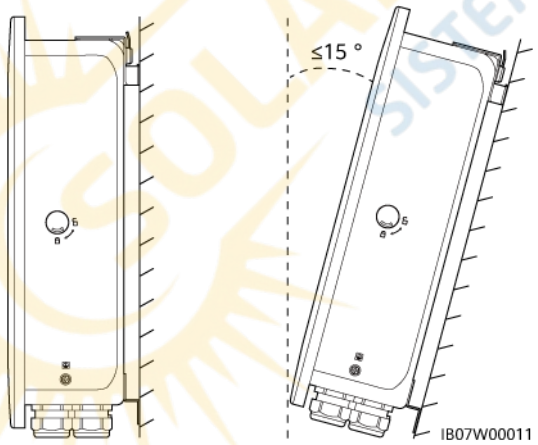

4.3 Preparing Tools

Table 4-2 Personal protective equipment (PPE)

Safety helmet	Goggles	Reflective vest	Insulated shoes
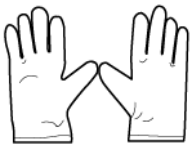 Electrostatic discharge (ESD) gloves	Insulated gloves	Protective gloves	Dust mask

Table 4-3 Installation tools

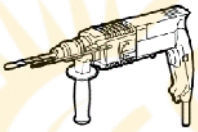 Hammer drill Drill bit: Φ8 mm, Φ6 mm	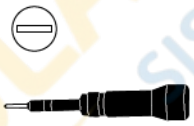 Flat-head insulated torque screwdriver	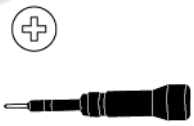 Phillips insulated torque screwdriver	Insulated torque socket wrench
Cable cutter	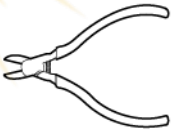 Diagonal pliers	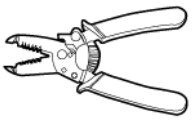 Wire stripper	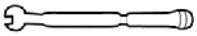 Torque wrench

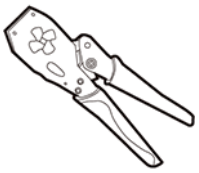 Power cable crimping tool	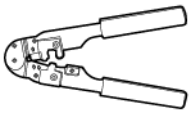 RJ45 crimping tool	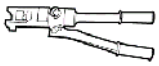 Hydraulic pliers	Eject pin
Utility knife	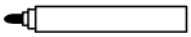 Marker	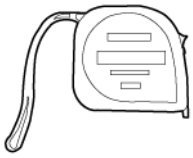 Steel measuring tape	Cable tie
Multimeter	Level	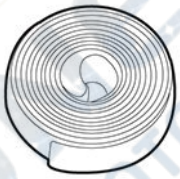 Heat shrink tubing	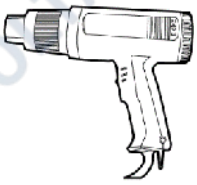 Heat gun
Rubber mallet	Vacuum cleaner	-	-

4.4 Pre-installation Check

Checking Outer Packaging

Before unpacking the product, check the outer packaging for damage, such as holes and cracks, and check the product model. If any damage is found or the model is not what you requested, do not unpack the product and contact your vendor as soon as possible.

NOTICE

You are advised to remove the packing materials within 24 hours before installing the product.

Checking Deliverables

After unpacking the SmartGuard, check that the deliverables are intact and complete, and free from any obvious damage. If any item is missing or damaged, contact your vendor.

NOTE

For details about the number of deliverables, see the *Packing List* in the packing case.

4.5 Moving the SmartGuard

Put your hands on both sides of the SmartGuard, take the SmartGuard out of the packing case, and move it to the installation position.

CAUTION

- Move the SmartGuard with care to prevent device damage and personal injury.
- Do not use the wiring terminals and ports at the bottom to support any weight of the SmartGuard.
- When you need to temporally place the SmartGuard on the ground, use foam, cardboard, or other protection material to prevent damage to its enclosure.

4.6 Wall Mounting

Procedure

Step 1 Determine the positions for drilling holes using the marking-off plate, level the holes using a level, and mark the positions using a marker.

Step 2 Secure the mounting bracket.

DANGER

Avoid drilling holes into the water pipes or power cables buried in the wall.

NOTE

- M6x60 expansion bolts are delivered with the product. If the length and number of the bolts do not meet installation requirements, prepare M6 stainless steel expansion bolts by yourself.
- The expansion bolts delivered with the product are used for solid brick-concrete walls. If other types of walls are used, ensure that the load-bearing capacity requirements are met and appropriate bolts are selected.
- To prevent installation failure of expansion bolts due to excessive deviation of holes on brick-concrete walls, you are advised to use small drill bits or other installation parts such as plastic anchor bolts to ensure reliable installation. The service life of the installation parts shall be at least 10 years.

Figure 4-4 Expansion bolt composition

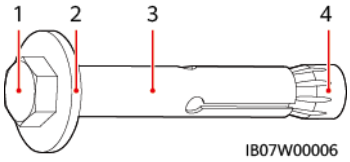

(1) Hexagonal bolt (2) Flat washer (3) Sleeve (4) Conical nut

NOTICE

- To prevent dust inhalation or contact with eyes, wear safety goggles and a dust mask when drilling holes.
- Use a vacuum cleaner to clean up dust in and around the holes, and measure the spacing. If the holes are inaccurately positioned, drill the holes again.
- Partially tighten the expansion bolts, and then remove the hexagonal bolts and flat washers of the upper two expansion bolts. Loosen the hexagonal bolts and flat washers of the lower two expansion bolts.

Figure 4-5 Installing expansion bolts

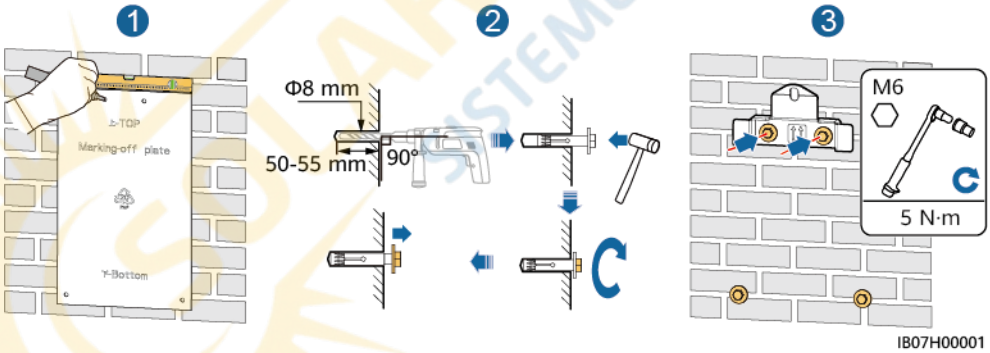

Step 3 Install the SmartGuard on the mounting bracket and tighten the nuts.

Figure 4-6 Installing the SmartGuard

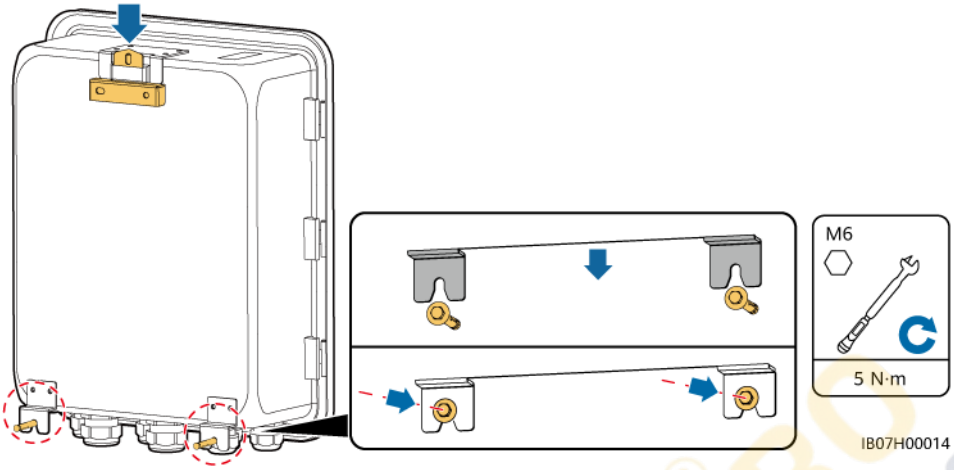

----End

5 Electrical Connections

Precautions

DANGER

Before connecting cables, ensure that the circuit breaker of the SmartGuard and all connected external switches are in **OFF** state. Otherwise, the high voltage may result in electric shocks.

DANGER

- The site must be equipped with qualified fire fighting facilities, such as fire sand and carbon dioxide fire extinguishers.
- Wear PPE and use dedicated insulated tools to avoid electric shocks or short circuits.

CAUTION

Stay away from the equipment when preparing cables to prevent cable scraps from entering the equipment. Cable scraps may cause sparks and result in personal injury and equipment damage.

WARNING

- Device damage caused by incorrect cable connections is not covered by the product warranty.
- Only qualified electrical technicians are allowed to connect cables.
- Operation personnel must wear proper PPE when connecting cables.
- Before connecting cables to ports, leave enough slack to reduce the tension on the cables and prevent poor cable connections.

 Copyright © Huawei Digital Power Technologies Co., Ltd.

NOTE

The cable colors shown in the electrical connection diagrams provided in this section are for reference only. Select cables in accordance with local cable specifications (green-and-yellow cables are only used for protective earthing).

5.1 Preparing Cables

Figure 5-1 Cable connections (dashed boxes indicate optional configuration)

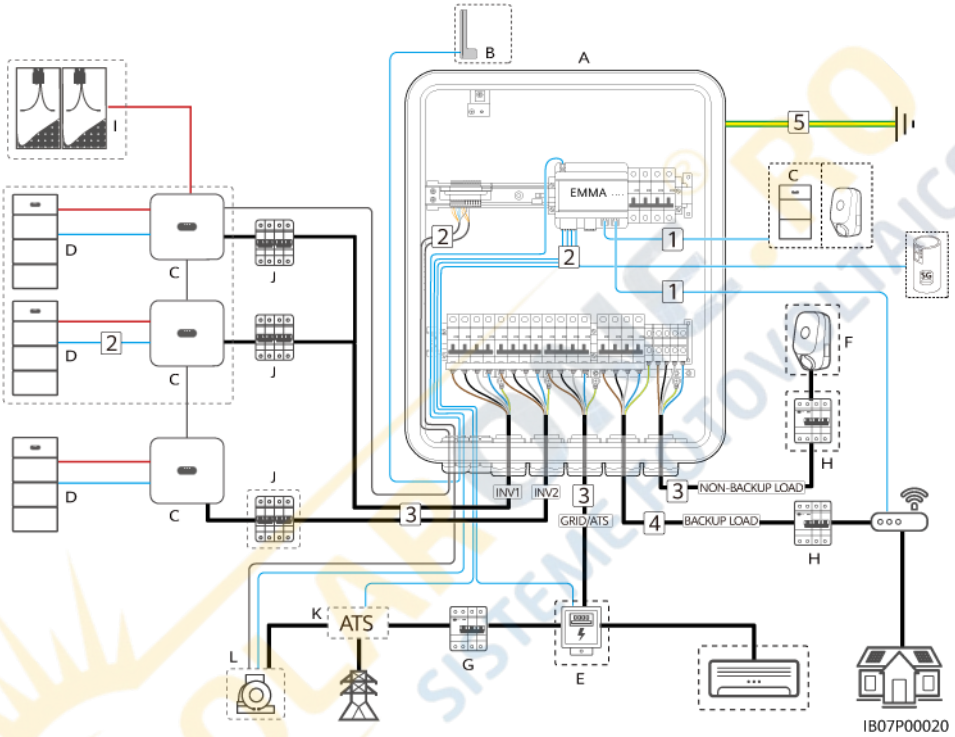

Table 5-1 Component description

No.	Component	Description	Source
A	SmartGuard	Three-phase SmartGuard. If the SmartGuard is used with MAP0 series inverters, its backup load port can be connected to single-phase loads and three-phase loads. However, if the SmartGuard is used with M1 and MB0 series inverters, its backup load port can be connected only to single-phase loads.	Purchased from Huawei
B	External WLAN antenna	If you do not want to use an FE network cable and the signal quality is poor, you can install an external antenna to enhance WLAN signals.	Purchased from Huawei

No.	Component	Description	Source
C	SUN2000	• SUN2000-(3KTL-12KTL)-M1 • SUN2000-(15KTL-25KTL)-MB0 • SUN5000-(17KTL, 25KTL)-MB0 • SUN2000-(5KTL-12KTL)-MAP0 • SUN5000-(8KTL, 12KTL)-MAP0	Purchased from Huawei
D	ESS	• LUNA2000-(5-30)-S0 • LUNA2000-(7, 14, 21)-S1	Purchased from Huawei
E	Power meter	The recommended power meter models are DTSU666-H, DTSU666-H 250 A/50 mA, DTSU666-HW, YDS60-80, DTSU71, DHSU1079-CT, and YDS60-C24.	Purchased from Huawei
F	Charger	• SCharger-22KT-S0 • SCharger-7KS-S0	Purchased from Huawei
G	Main circuit breaker	The main circuit breaker must provide the leakage protection function and its rated voltage must be a least 415 V AC. • Its rated residual operating current ≥ Number of M1 or MAP0 inverters x 100 mA • Its rated residual operating current ≥ Number of MB0 inverters x 300 mA	Prepared by the customer
H	RCD	An RCD must be installed before the backup load.	Prepared by the customer
I	PV string	A PV string is composed of the PV modules connected in series and works with optimizers.	Prepared by the customer
J	AC switch of the inverter	• Use the inverter AC input power cable of the specifications recommended for the SmartGuard to reduce the number of AC switches needed. For details, see **Table 5-3**. • If the AC input power cable of the specifications recommended for an inverter is used and the AC switch current ratings for the SmartGuard and inverter do not match each other, install an AC switch that meets the inverter requirements to ensure that the inverter can be safely disconnected from the SmartGuard if an exception occurs.	Prepared by the customer
K	ATS	In the grid+generator scenario, an ATS must be installed. Select an ATS based on the requirements of the SmartGuard. For details, see **D ATS Parameter Requirements**.	Prepared by the customer

No.	Component	Description	Source
L	Generator	Select a generator based on the residential load power and SmartGuard requirements. For details, see **E Generator Parameter Requirements**.	Prepared by the customer

Table 5-2 Cable description

No.	Cable	Type	Recommended Specifications	Source
1	FE communications cable (EMMA)	Recommended: a CAT 5E outdoor shielded network cable (internal resistance ≤ 1.5 ohms/10 m), and a shielded RJ45 connector	• Conductor cross-sectional area: 0.12–0.2 mm^2 • Cable outer diameter: 4–8 mm	Prepared by the customer
2	Heat pump control signal cable	Two-core outdoor twisted pair cable	• Conductor cross-sectional area: 0.2–1 mm^2 • Cable outer diameter: 4–8 mm	Prepared by the customer
	Power meter signal cable			
	Position feedback signal upon grid connection			
	Battery signal cable	Two-core outdoor shielded twisted pair cable		
	Generator signal cable	Multi-core outdoor shielded twisted pair cable		
	Inverter signal cable			
3	Inverter AC input power cable (INV1)	• Not using the PE equipotential bonding point at the AC output port: four-core (L1, L2, L3, and N) outdoor copper cable • Using the PE equipotential bonding point at the AC output port: five-core (L1, L2, L3, N, and PE) outdoor copper cable	• Conductor cross-sectional area: – M1 (3K–12K): 4–6 mm^2 – MAP0 (5K–12K): 4–6mm^2 – MB0 (12K–25K): 10–16 mm^2 • Cable outer diameter: 10–32 mm	Prepared by the customer
	Inverter AC input power cable (INV2)			

No.	Cable	Type	Recommended Specifications	Source
	Grid AC output power cable	• Not using the PE equipotential bonding point at the AC output port: four-core (L1, L2, L3, and N) outdoor copper cable • Using the PE equipotential bonding point at the AC output port: five-core (L1, L2, L3, N, and PE) outdoor copper cable	• Conductor cross-sectional area: 4–16 mm^2 • Cable outer diameter: max. 10–32 mm	
	AC output power cable for the non-backup load			
4	AC output power cable for the backup load[a]	SmartGuard-63A-T0: five-core (L1, L2, L3, N, and PEN) outdoor copper cable	• Conductor cross-sectional area: 4–16 mm^2 • Cable outer diameter: 10–32 mm	Prepared by the customer
		SmartGuard-63A-AUT0: four-core (L1, L2, L3, and N) outdoor copper cable		
5	PE cable	Single-core outdoor copper cable and M6 OT terminal	Conductor cross-sectional area: 16 mm^2	Prepared by the customer
Note a: The PEN of the SmartGuard-63A-T0 backup load port must be connected, but the PEN of the SmartGuard-63A-AUT0 backup load port does not need to be connected.				

NOTE

- The minimum cable cross-sectional area must meet local standards.
- The factors to be considered in cable selection include the rated current, cable type, routing mode, ambient temperature, and maximum acceptable line loss.

5.2 Connecting a PE Cable

Precautions

DANGER

- Ensure that the PE cable is securely connected. Otherwise, electric shocks may occur.
- Do not connect the neutral wire to the enclosure as a PE cable. Otherwise, electric shocks may occur.

NOTE

- The PE point at the AC output port is used only as a PE equipotential bonding point, and cannot substitute for the PE point on the enclosure.
- It is recommended that silicone grease or paint be applied around the ground terminal after the PE cable is connected.

Procedure

Step 1 Crimp an OT terminal.

NOTICE

- Avoid scratching the core wire when stripping a cable.
- The cavity formed after the conductor crimp strip of the OT terminal is crimped must wrap the core wire completely. The core wire must make close contact with the OT terminal.
- Wrap the wire crimping area with heat shrink tubing or insulation tape. The heat shrink tubing is used as an example.
- Use a heat gun carefully to avoid heat damage to the equipment.

Figure 5-2 Crimping an OT terminal

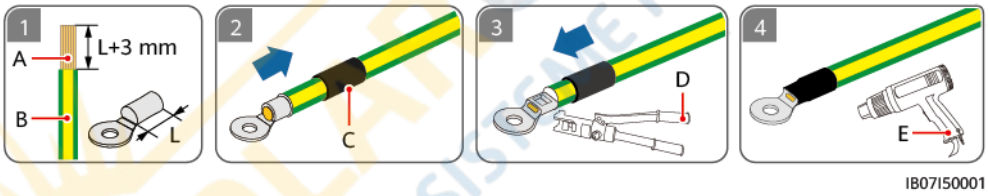

(A) Core wire (B) Insulation layer (C) Heat shrink tubing

(D) Hydraulic pliers (E) Heat gun

Step 2 Connect the PE cable.

Figure 5-3 Connecting the PE cable

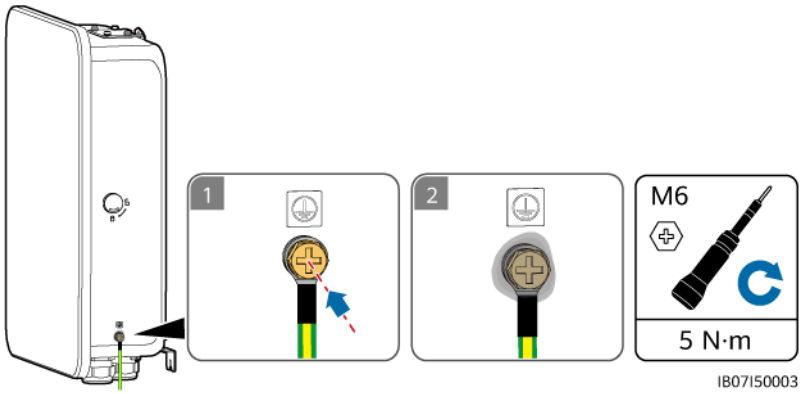

----End

5.3 Opening the Maintenance Compartment

Precautions

DANGER

- Before opening the maintenance compartment door, turn off the main circuit breaker on the grid side, shut down the inverter, and turn off the DC switches of the inverter and ESS.
- Before opening the maintenance compartment cover, turn off the backup load circuit breaker, grid AC circuit breaker, and two inverter AC circuit breakers inside the SmartGuard.
- Do not operate the bypass switch during site deployment or normal use.

CAUTION

- If you need to open the maintenance compartment door on rainy or snowy days, take protective measures to prevent rain or snow from entering the maintenance compartment. If protective measures are unavailable, do not open the maintenance compartment door on rainy or snowy days.
- Do not leave unused screws in the maintenance compartment.

Procedure

Step 1 Unlock and open the maintenance compartment door using the delivered key, and remove the cushioning material.

Figure 5-4 Opening the maintenance compartment door

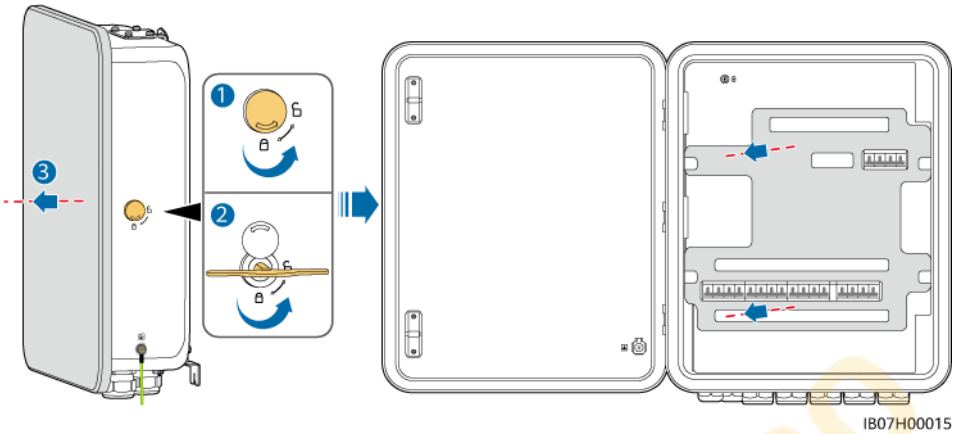

NOTE

Dispose of the removed cushioning material according to waste sorting regulations.

Step 2 Turn off the four switches shown in the figure.

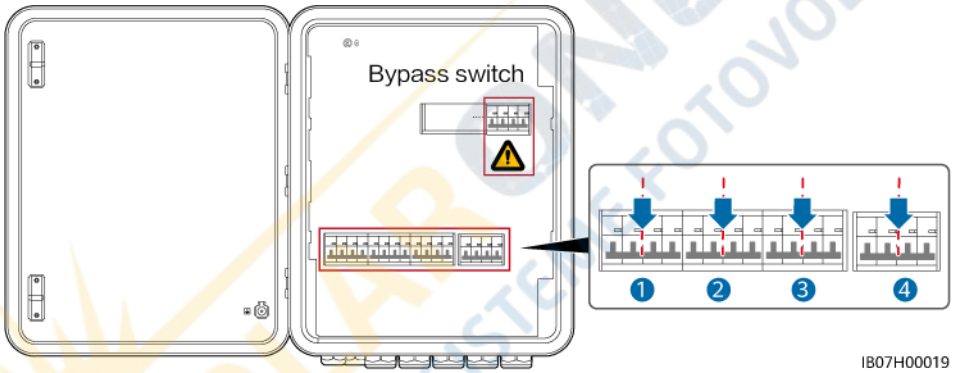

Step 3 Remove the screw from the maintenance compartment cover, and open the cover.

Figure 5-5 Opening the maintenance compartment cover

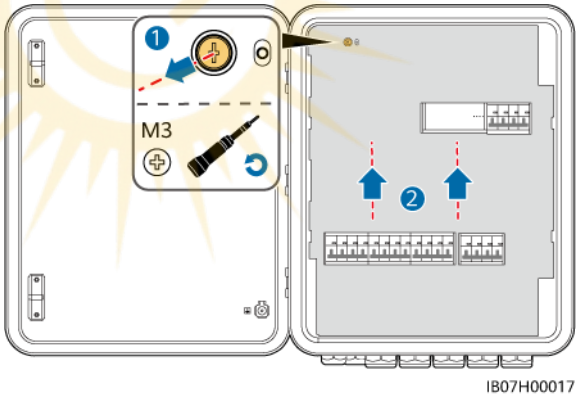

----End

5.4 Installing the Grid AC Output Power Cable

Precautions

A main circuit breaker with the leakage protection function must be installed. Its rated voltage must be at least 415 V AC. Its rated residual operating current must be ≥ Number of M1 or MAP0 inverters x 100 mA or ≥ Number of MB0 inverters x 300 mA.

Procedure

Step 1 If a generator is installed, its neutral wire must be grounded. Otherwise, the SmartGuard will report a generator grounding exception alarm.

Figure 5-6 Generator neutral wire grounding

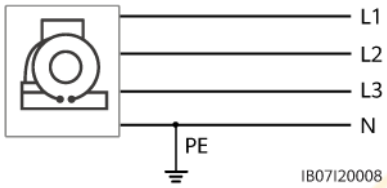

Step 2 Crimp AC cord end terminals. You can crimp AC cord end terminals for a four-core or five-core cable.

NOTE

The AC cord end terminals delivered with the product are mainly used for cables with a cross-sectional area of 16 mm^2. If cables with a cross-sectional area of less than 16 mm^2 are used, select AC cord end terminals that meet the requirements.

Figure 5-7 Crimping AC cord end terminals

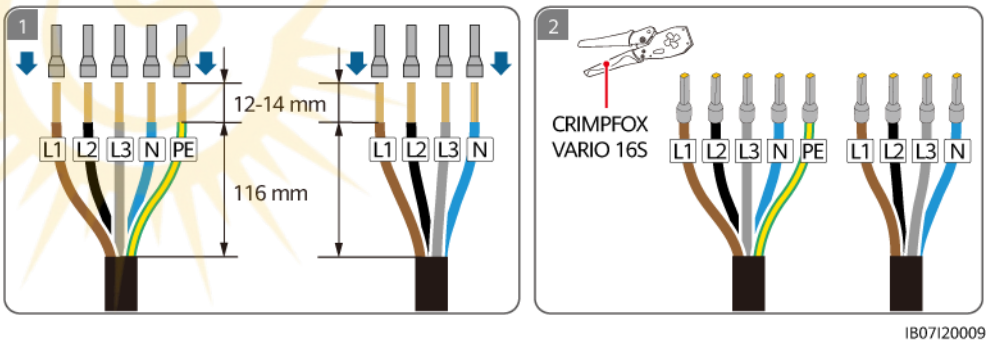

Step 3 Connect the grid AC output power cable.

Figure 5-8 Connecting the grid AC output power cable

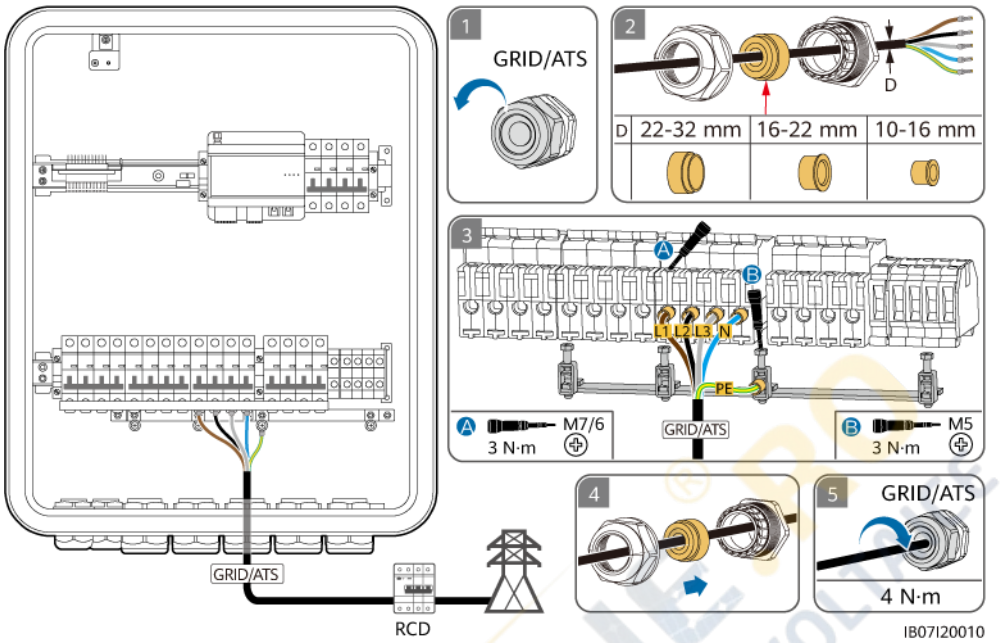

NOTICE

- The four-core cable and five-core cable are connected in the same way except that PE is not connected for the four-core cable.
- The PE point at the AC output port is used only as a PE equipotential bonding point, and cannot substitute for the PE point on the enclosure.
- Ensure that the cable jacket is inside the connector.
- Insert the exposed core wires completely into the holes.
- Connect the AC output power cable securely. Otherwise, the device may fail to operate properly or the AC connector may be damaged.
- Ensure that the cables are not twisted.

NOTE

The cable colors shown in the figures are for reference only. Select an appropriate cable according to the local standards.

----End

5.5 Installing the Inverter AC Input Power Cable

Precautions

- Shut down the inverter, and turn off the DC switches of the inverter and ESS.
- If the AC input power cable of the specifications recommended for an inverter is used and the AC switch current ratings for the SmartGuard and inverter do not match each other, install an AC switch that meets the inverter

requirements to ensure that the inverter can be safely disconnected from the SmartGuard if an exception occurs.

- The SUN2000-(5KTL-12KTL)-MAP0 and SUN5000-(8KTL, 12KTL)-MAP0 inverters cannot be connected together in a parallel system.

Procedure

Step 1 Connect inverters to the SmartGuard based on the port requirements. Only the MAP0 model supports three or less inverters connected in parallel.

Table 5-3 SmartGuard port requirements

Inverter	Inverter Quantity	SmartGuard Port	Port Quantity	External AC Switch	Cable Specifications	External AC Switch Specifications
SUN2000-(12KTL-25KTL)-MB0	1	INV1 63A	1	Not required	• Conductor cross-sectional area: 10–16 mm^2 • Cable outer diameter: 10–32 mm	If an external AC switch is required, select an appropriate AC switch in accordance with local industry standards and regulations. It is recommended that you use a three-phase AC circuit breaker with a rated voltage greater than or equal to 415 V AC and a rated current of: • 5KTL–6KTL: 16 A • 8KTL: 25 A • 10KTL–12KTL: 32 A
SUN5000-(17KTL, 25KTL)-MB0	1	INV1 63A	1	Not required		
SUN2000-(3KTL-12KTL)-M1	1	INV2 32A	1	Not required	• Conductor cross-sectional area: 4–6 mm^2 • Cable outer diameter: 10–32 mm	
SUN2000-(5KTL-12KTL)-MAP0	1	INV2 32A	1	Not required		
	2	INV1 63A	1	Required		
		INV2 32A	1	Not required		
	3	INV1 63A	2	Required		
		INV2 32A	1	Not required		
SUN5000-(8KTL, 12KTL)-MAP0	1	INV2 32A	1	Not required		
	2	INV1 63A	1	Required		
		INV2 32A	1	Not required		
	3	INV1 63A	2	Required		
		INV2 32A	1	Not required		

Step 2 (Optional) Connect two or three MAP0 inverters in parallel.

Figure 5-9 MAP0 inverters connected in parallel (dashed boxes indicating optional components)

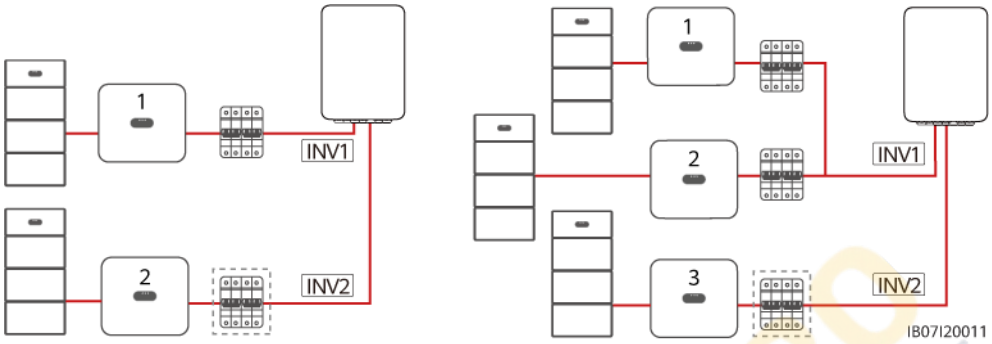

Step 3 Crimp AC cord end terminals. You can crimp AC cord end terminals for a four-core or five-core cable.

NOTE

The AC cord end terminals delivered with the product are mainly used for cables with a cross-sectional area of 16 mm^2. If cables with a cross-sectional area of less than 16 mm^2 are used, select AC cord end terminals that meet the requirements.

Figure 5-10 Crimping AC cord end terminals

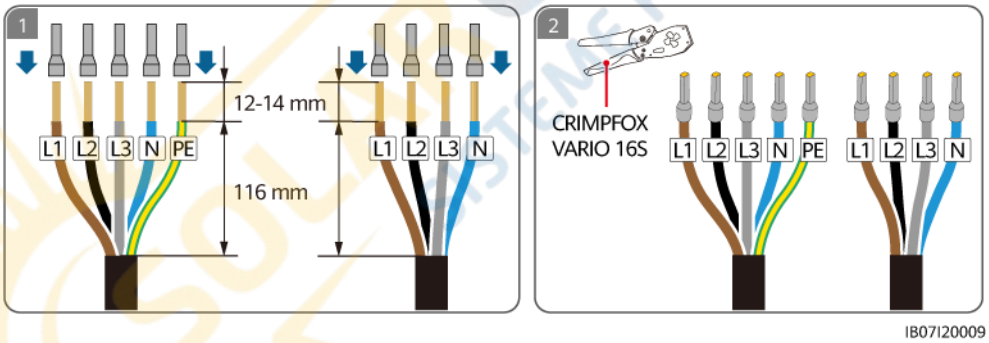

Step 4 Connect the inverter AC input power cables.

Figure 5-11 Connecting the inverter AC input power cables (dashed boxes indicating optional components)

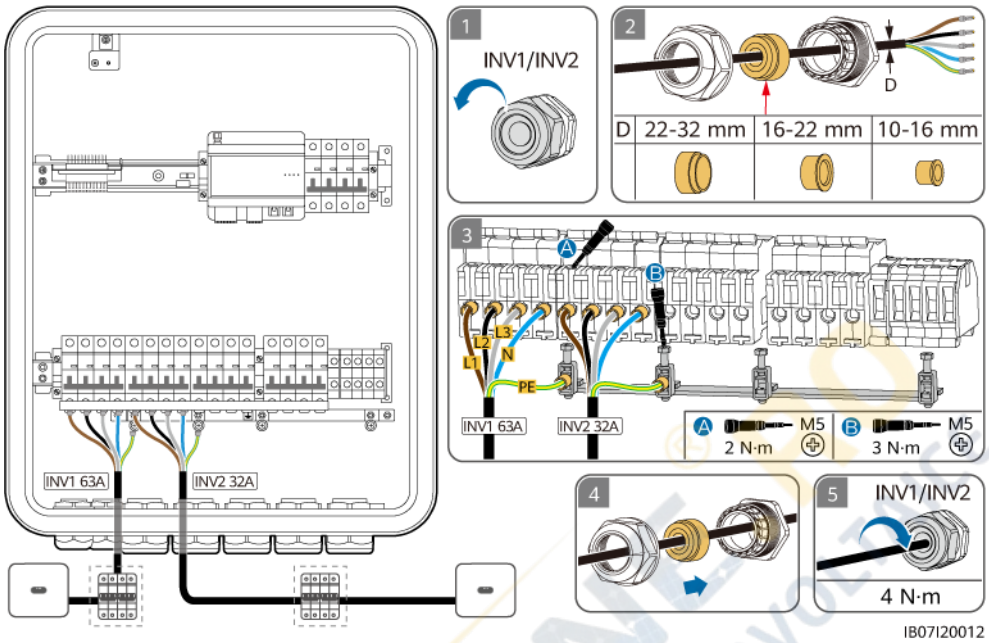

NOTICE

- The four-core cable and five-core cable are connected in the same way except that PE is not connected for the four-core cable.
- The PE point at the AC output port is used only as a PE equipotential bonding point, and cannot substitute for the PE point on the enclosure.
- Ensure that the cable jacket is inside the connector.
- Insert the exposed core wires completely into the holes.
- Connect the AC output power cable securely. Otherwise, the device may fail to operate properly or the AC connector may be damaged.
- Ensure that the cables are not twisted.

NOTE

The cable colors shown in the figures are for reference only. Select an appropriate cable according to the local standards.

----End

5.6 Installing the Backup Load Output Power Cable

Precautions

- An RCD must be installed for the backup load. During off-grid operation, the main circuit breaker does not provide protection. Electric leakage on the loads may result in electric shocks.

- If the power of backup loads exceeds the maximum off-grid power of the system, the inverter may be shut down due to overload. In this case, you need to shut down some loads. Alternatively, connect loads with lower priority to the non-backup load port.
- If the SmartGuard is used with MAP0 series inverters, its backup load port can be connected to single-phase loads and three-phase loads. However, if the SmartGuard is used with M1 and MB0 series inverters, its backup load port can be connected only to single-phase loads.

Procedure

Step 1 Crimp AC cord end terminals.

NOTE

The AC cord end terminals delivered with the product are mainly used for cables with a cross-sectional area of 16 mm^2. If cables with a cross-sectional area of less than 16 mm^2 are used, select AC cord end terminals that meet the requirements.

Figure 5-12 Crimping AC cord end terminals for the SmartGuard-63A-T0

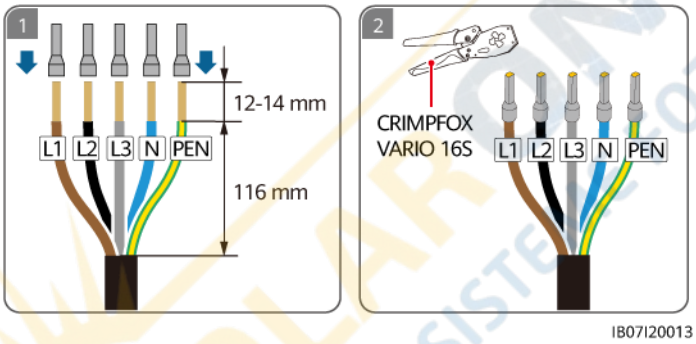

Figure 5-13 Crimping AC cord end terminals for the SmartGuard-63A-AUT0

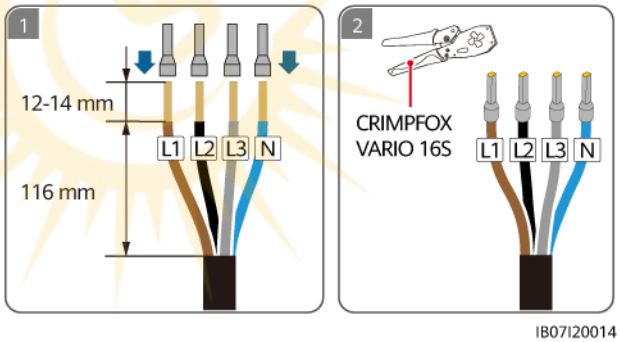

Step 2 Connect the output power cable to the backup load. Check the load to be connected based on the backup load requirements.

Table 5-4 Backup load requirements

Backup Load	MAP0	M1	MB0
Single-phase load	Supported	Supported	Supported

Backup Load	MAP0	M1	MB0
Three-phase load	Supported	Not supported	Not supported

Figure 5-14 Connecting the backup load output power cable of the SmartGuard-63A-T0

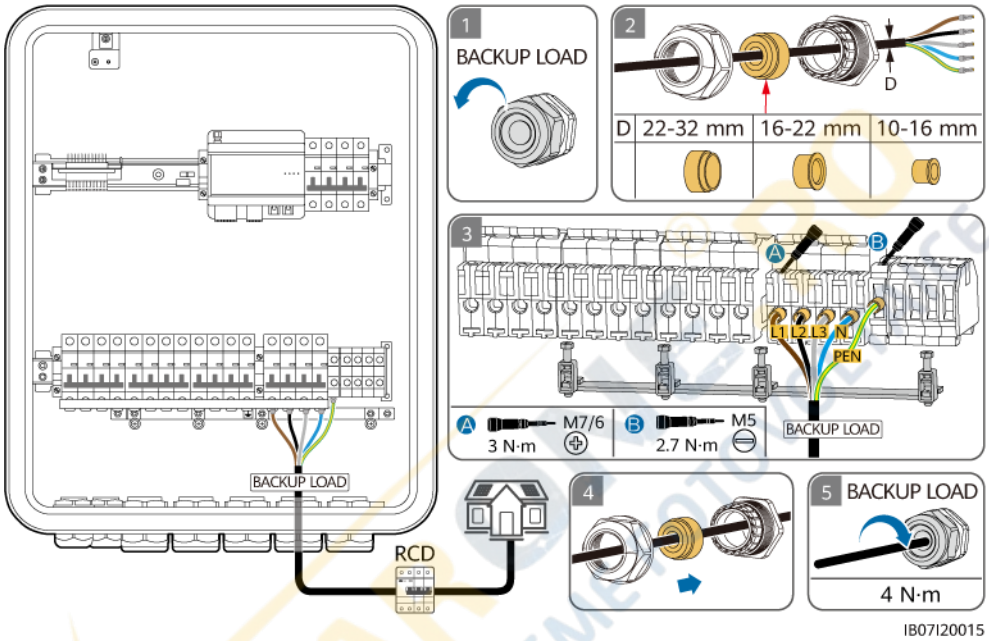

Figure 5-15 Connecting the backup load output power cable of the SmartGuard-63A-AUT0

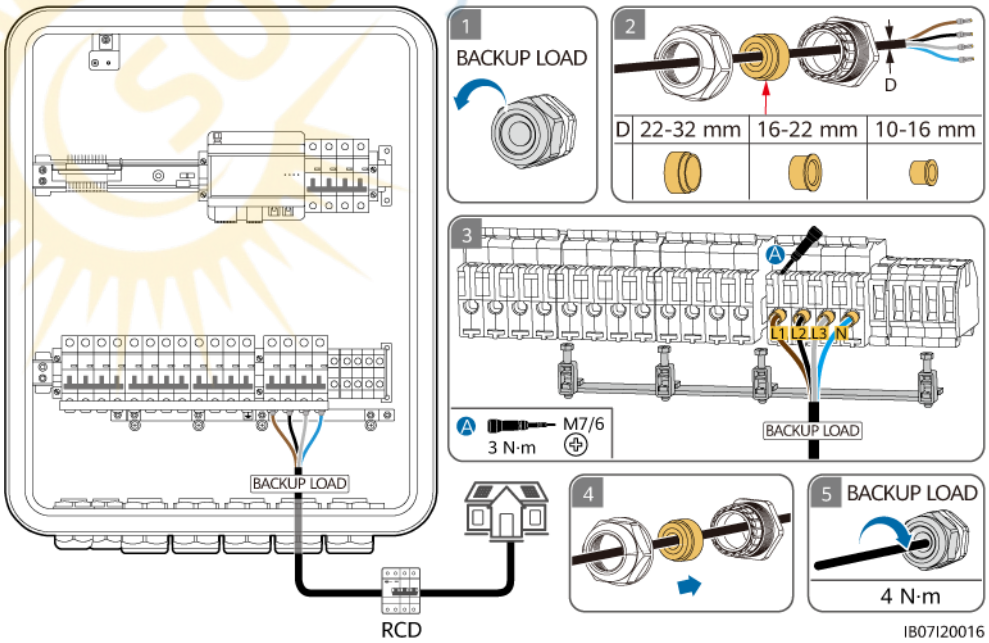

NOTICE

- The four-core cable and five-core cable are connected in the same way except that the four-core cable is not connected to the PEN.
- The PE point at the AC output port is used only as a PE equipotential bonding point, and cannot substitute for the PE point on the enclosure.
- Ensure that the cable jacket is inside the connector.
- Insert the exposed core wires completely into the holes.
- Connect the AC output power cable securely. Otherwise, the device may fail to operate properly or the AC connector may be damaged.
- Ensure that the cables are not twisted.

NOTE

The cable colors shown in the figures are for reference only. Select an appropriate cable according to the local standards.

----End

5.7 Installing the Non-backup Load Output Power Cable

Procedure

Step 1 Crimp AC cord end terminals. You can crimp AC cord end terminals for a four-core or five-core cable.

NOTE

- The non-backup load port can be connected to both single-phase and three-phase loads.
- The AC cord end terminals delivered with the product are mainly used for cables with a cross-sectional area of 16 mm^2. If cables with a cross-sectional area of less than 16 mm^2 are used, select AC cord end terminals that meet the requirements.

Figure 5-16 Crimping AC cord end terminals

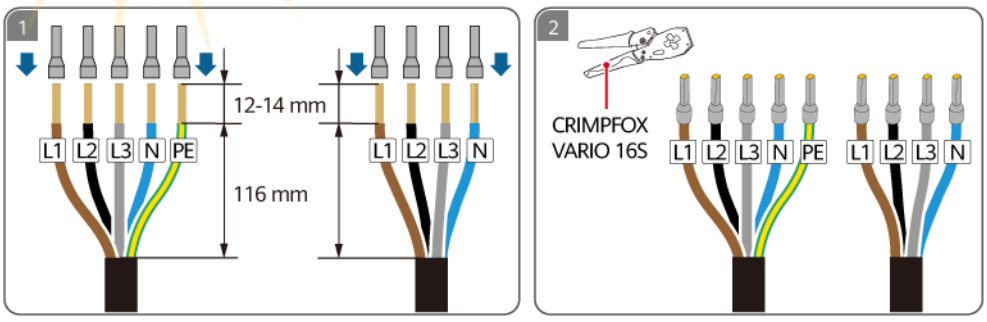

Step 2 Connect the non-backup load output power cable.

Figure 5-17 Connecting the non-backup load output power cable (the dashed box indicates an optional component)

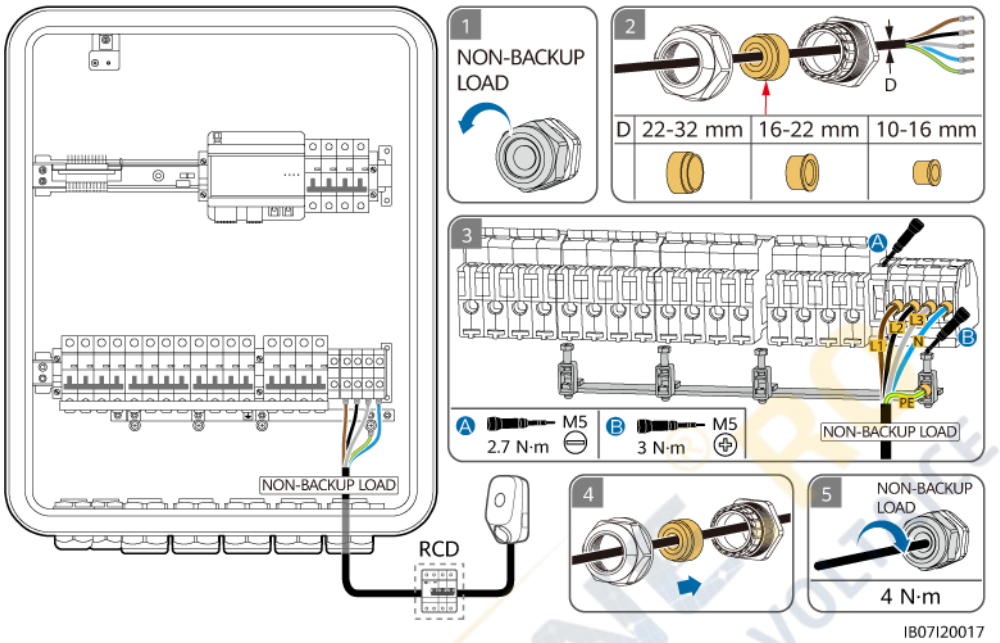

NOTICE

- The four-core cable and five-core cable are connected in the same way except that PE is not connected for the four-core cable.
- The PE point at the AC output port is used only as a PE equipotential bonding point, and cannot substitute for the PE point on the enclosure.
- Ensure that the cable jacket is inside the connector.
- Insert the exposed core wires completely into the holes.
- Connect the AC output power cable securely. Otherwise, the device may fail to operate properly or the AC connector may be damaged.
- Ensure that the cables are not twisted.

NOTE

The cable colors shown in the figures are for reference only. Select an appropriate cable according to the local standards.

----End

5.8 Installing the SmartGuard Signal Cables

Precautions

When laying out signal cables, separate them from power cables and keep them away from strong interference sources to prevent communication interruption.

Procedure

Step 1 Crimp signal cable terminals. Only MAP0 inverters require parallel connection of signal cables.

Figure 5-18 Crimping cord end terminals for the signal cable (the dashed box indicates an optional component)

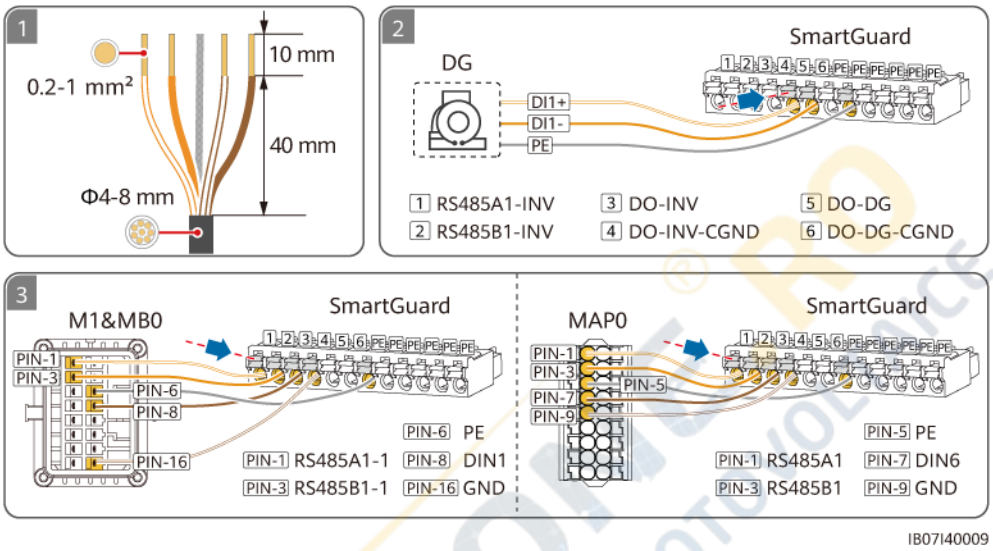

Table 5-5 COM ports on the SmartGuard

No.	Definition	Function	Description
1	COM-1 RS485A1_INV	RS485A, RS485 differential signal+	Connect to the RS485 signal ports of the inverter.
2	COM-2 RS485B1_INV	RS485B, RS485 differential signal–	
3	COM-3 DO_INV	Digital output signal+	Connect to the on/off-grid control signal ports of the inverter.
4	COM-4 DO_INV_CGND	CGND	
5	COM-5 DO_DG	Digital output signal+	Connect to the generator control signal port.
6	COM-6 DO_DG_CGND	CGND	
PE	PE	Shield layer grounding	Grounds the shield layer of a communications cable.

Step 2 (Optional) Connect signal cables in parallel for MAP0 inverters.

Figure 5-19 Parallel connection of signal cables (using three inverters connected in parallel as an example)

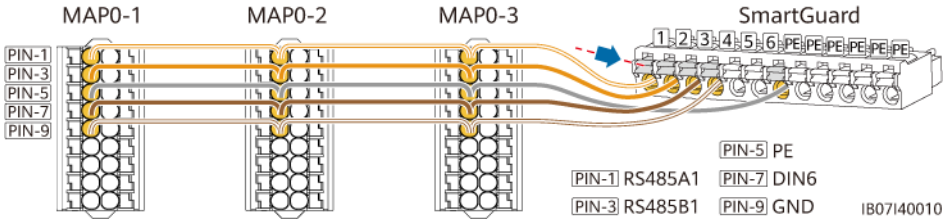

Step 3 Connect the signal cables of the SmartGuard.

Figure 5-20 Connecting the SmartGuard signal cables (the dashed box indicates an optional component)

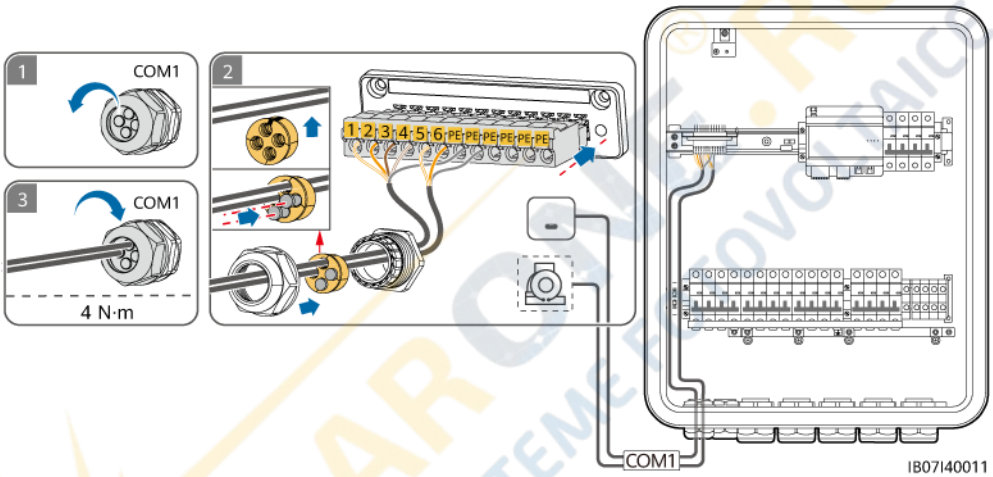

----End

5.9 Installing the SmartGuard Signal Cables (EMMA)

Precautions

- When laying out signal cables, separate them from power cables and keep them away from strong interference sources to prevent communication interruption.
- Ensure that the protection layer of the signal cable is inside the connector, surplus core wires are cut off from the protection layer, the exposed core wires are inserted completely into the holes, and the cable is connected securely.
- The EMMA allows smart appliances (including smart sockets, smart circuit breakers, and smart relays) to connect to the router through the FE or WLAN port. For details about how to install the smart appliances, see **Residential Smart PV Solution User Manual (EMMA)**.

Port Definitions

1. FE port definitions

Figure 5-21 Port definitions

Definition	Function	Description
LAN	RJ45 network port	Connects to a charger or ESS.
WAN	RJ45 network port	Connects to a router for the SmartGuard to connect to the FusionSolar SmartPVMS.

2. Definitions of the 14 pins

Figure 5-22 Pin definitions

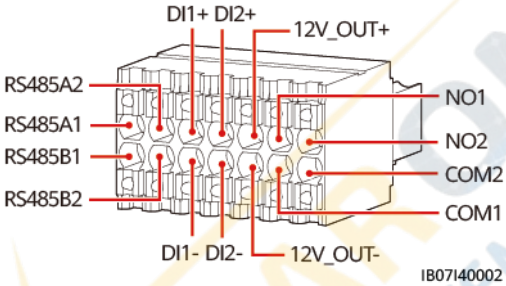

Definition	Function	Description
485A1	RS485B, RS485 differential signal+	Not connected
485B1	RS485A, RS485 differential signal–	
485A2	RS485B, RS485 differential signal+	Connect to the RS485 port of the power meter if some of loads connect to the SmartGuard.
485B2	RS485A, RS485 differential signal–	
DI1+	Digital input signal 1+	Connects to the ATS port for the position feedback signal upon grid connection.
DI1–	Digital input signal 1–	
DI2+	Digital input signal 2+	Connect to the generator alarm signal port.
DI2–	Digital input signal 2–	

Definition	Function	Description
12V_OUT+	12 V power output+	Optional. 12 V power output ports of the EMMA, which support 100 mA load, output voltage of 9.5–13.2 V, and 12 V@30 mA capability of driving the external relay coil. The external relay works with NO1 and COM1 to control the SG Ready heat pump.
12V_OUT–	12 V power output–	
NO1	Digital output signal	Optional. SG Ready heat pump control signal ports, which support a maximum of 12 V signal voltage and a maximum contact output capability of 12 V DC@1 A. The NO and COM contacts are normally open and COM is a common point.
COM1	Digital output signal	
NO2	Digital output signal	Reserved
COM2	Digital output signal	

Procedure

Step 1 (Optional) Connect the signal cable to the 14-pin terminal.

NOTE

When the SG Ready heat pump provides 12 V power supply, the EMMA directly controls the heat pump. When the SG Ready heat pump cannot provide 12 V power supply, the EMMA controls the heat pump through an external relay.

Figure 5-23 Connecting the signal cable to the 14-pin terminal

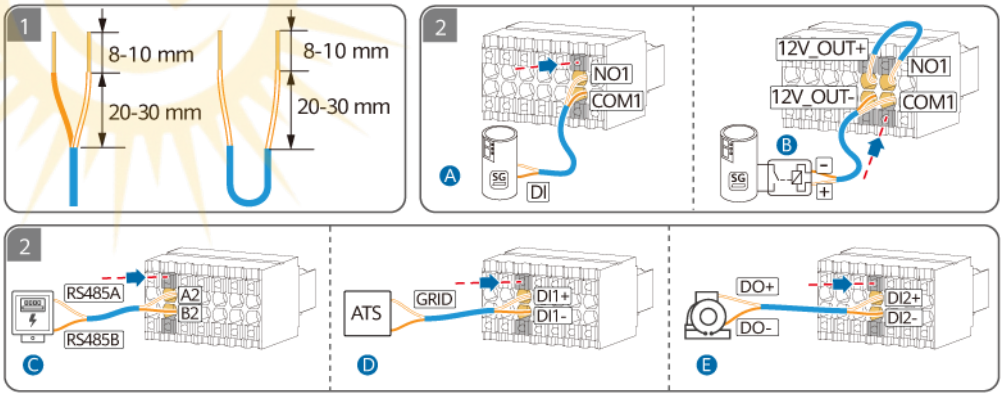

(A) Direct connection between the EMMA and the heat pump

(B) Heat pump control through an external relay

(C) Power meter RS485 signal

(D) Position feedback signal upon grid connection

(E) Generator alarm signal

Step 2 (Optional) If some of loads connect to the SmartGuard, connect the power meter communications cable.

Figure 5-24 Connecting the power meter communications cable

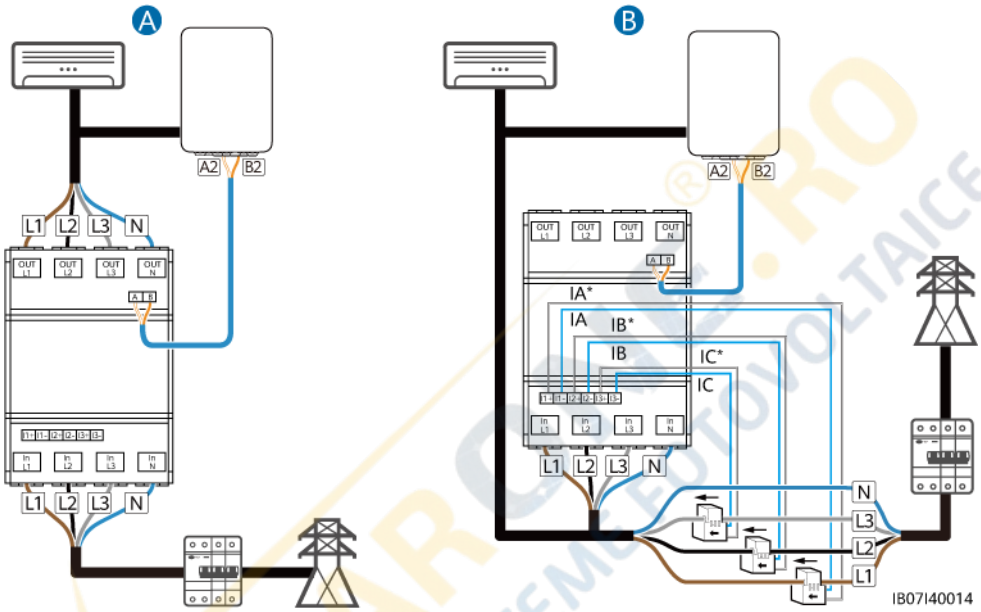

(A) Direct cable connection

(B) Cable connection through the CT

Step 3 (Optional) Connect the FE communications cable.

NOTE

- One charger can be connected to the EMMA through the FE port or connected to the router through the FE or WLAN port. Two chargers must be connected to the router only through the FE or WLAN port. Do not connect one charger to the EMMA and the other charger to the router respectively at the same time.
- The LAN port can be used to connect one charger or ESS to the EMMA through FE.
- The EMMA can be connected to the router through the FE or WLAN port. If WLAN is used, the router must be close to the SmartGuard.
- The EMMA can be equipped with an external WLAN antenna. If you do not want to use an FE network cable and the signal quality is poor, you can install an external antenna to enhance WLAN signals. For details about how to set an external WLAN antenna, see **6.4.5 (Optional) Setting the External WLAN Antenna**.

Figure 5-25 FE communications cable (dashed boxes indicate optional components)

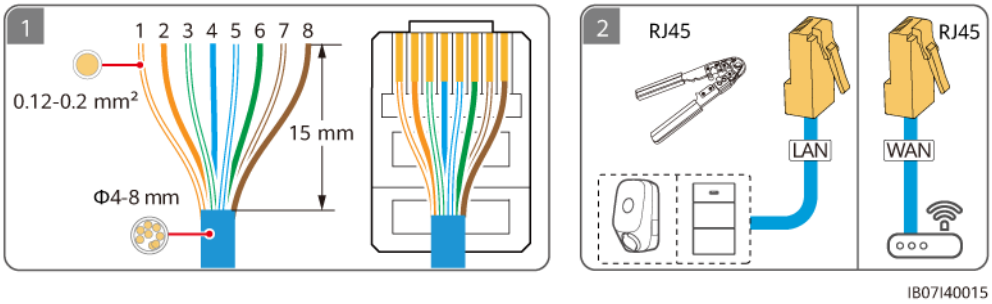

(1) White-and-orange	(2) Orange	(3) White-and-green	(4) Blue
(5) White-and-blue	(6) Green	(7) White-and-brown	(8) Brown

Step 4 Connect the EMMA signal cables. If an external antenna is required, attach it to the marked area in the upper left corner of the SmartGuard by magnet.

Figure 5-26 Connecting EMMA signal cables (dashed boxes indicate optional components)

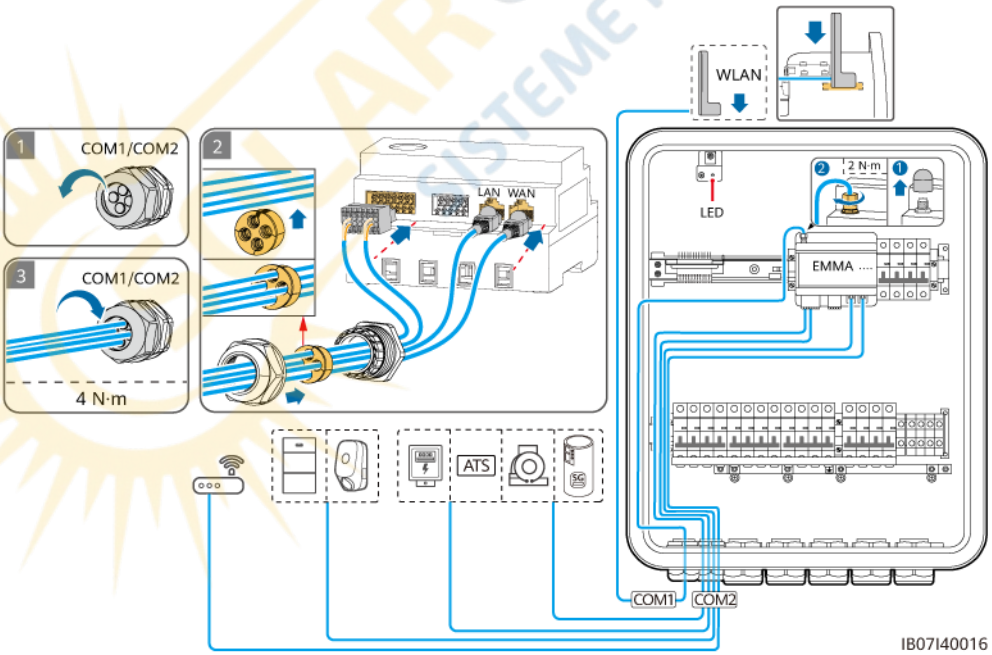

----End

6 System Commissioning

6.1 Check Before Power-On

WARNING

Check whether the terminals of the SmartGuard are correctly connected according to the document.

Table 6-1 Checklist

No.	Check Item	Acceptance Criteria
1	SmartGuard	The SmartGuard is installed correctly and securely.
3	Cable routing	Cables are routed properly as required by the customer.
4	Cable ties	Cable ties are evenly distributed and no burr exists.
5	Reliable grounding	The PE cable is connected correctly, securely, and reliably.
6	Switches	The switches of the device and all the switches connected to the device are in **OFF** state.
7	Cable connection	All cables are correctly and securely connected.
8	Unused terminal and port	Unused terminals and ports are locked by waterproof glands.
9	Installation environment	The installation space is proper, and the installation environment is clean and tidy.

 Copyright © Huawei Digital Power Technologies Co., Ltd.

6.2 Closing the Maintenance Compartment

NOTE

- Before closing the maintenance compartment, remove tools, unused screws, and residue of cable stripping from the maintenance compartment.
- Keep the delivered keys properly for future use.

Step 1 Install the cover of the maintenance compartment, and tighten the screw on the cover.

Figure 6-1 Closing the cover

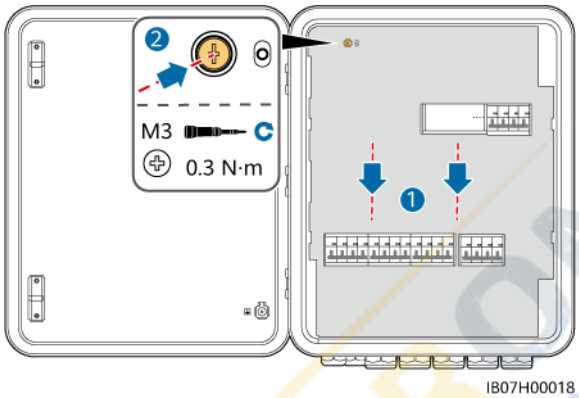

Step 2 Before closing the maintenance compartment door, turn on the four switches shown in the following figure (using the connection to three parallel MAP0 inverters as an example). During deployment and normal operation, do not operate the bypass switch shown in the figure.

DANGER

Bypass switch: When the grid is available but the SmartGuard cannot supply power to loads due to exceptions, refer to **7.4 Operations on the Bypass Switch of the SmartGuard**. Misoperations may cause electric shocks.

Figure 6-2 Turning on the switches

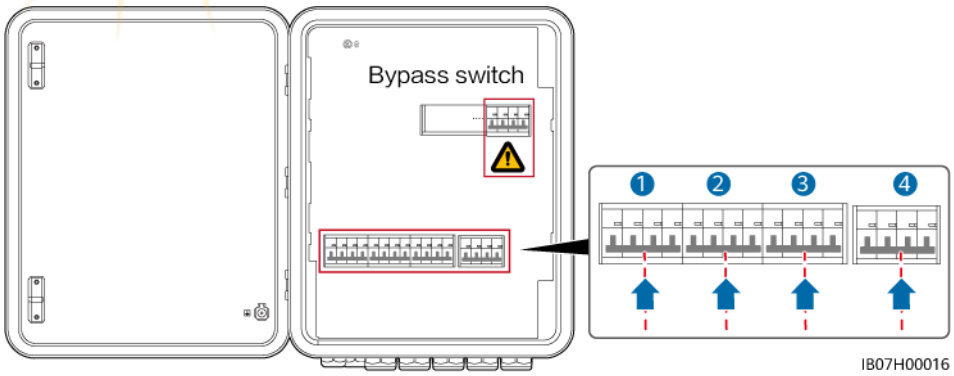

Step 3 Close the maintenance compartment door and lock the SmartGuard.

Figure 6-3 Closing the maintenance compartment door

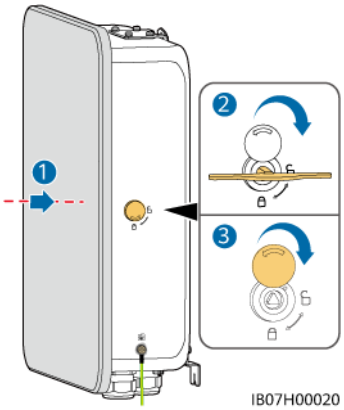

----End

6.3 System Power-On

Precautions

DANGER

- Wear PPE and use dedicated insulated tools to avoid electric shocks or short circuits.

NOTICE

When the device is powered on for the first time, ensure that the parameters are set correctly by professionals. Incorrect parameter settings may result in noncompliance with local grid connection requirements and affect the normal operations of the device.

6.3.1 Powering On the SmartGuard

NOTICE

If the power plant is equipped with a charger, choose power-on in on-grid mode for device commissioning when the power plant is powered on for the first time. If you choose power-on in off-grid mode, the charger cannot be detected during commissioning because it is not powered on.

Method 1: Power-On in On-Grid Mode

Step 1 Use a multimeter to check whether the AC voltage in the power distribution box is within the allowed range and whether cables are correctly connected.

Step 2 Turn on the ESS switch.

1. (Optional) Remove the locking screw for the **DC SWITCH** of the ESS.
2. Set the **DC SWITCH** of the ESS to ON.
3. (Optional) Press and hold the black start button for 5s if the PV strings are equipped with optimizers or receive no solar irradiance.

Step 3 Power on the inverter.

1. (Optional) Turn on the DC switch (if any) between the PV strings and the inverter.
2. (Optional) Remove the locking screw for the **DC SWITCH** of the inverter.
3. Set the **DC SWITCH** of the inverter to ON.

Step 4 Turn on the main circuit breaker on the grid side.

Step 5 Check that the SmartGuard is running in on-grid mode. Observe the LED indicators on the inverter, ESS, EMMA, and SmartGuard to check the running status.

----End

Method 2: Power-On in Off-Grid Mode (with PV Strings)

NOTICE

If the PV strings are equipped with optimizers or receive no solar irradiance, power-on in off-grid mode is not supported.

Step 1 Ensure that the main circuit breaker on the grid side is turned off.

Step 2 Turn on the ESS switch.

1. (Optional) Remove the locking screw for the **DC SWITCH** of the ESS.
2. Set the **DC SWITCH** of the ESS to ON.
3. Press and hold the black start button for 5s.

Step 3 Power on the inverter.

1. (Optional) Turn on the DC switch (if any) between the PV strings and the inverter.
2. (Optional) Remove the knob locking screw for the **DC SWITCH** of the inverter.
3. Set the **DC SWITCH** of the inverter to ON.

Step 4 Connect to the inverter by referring to **A Connecting to the Inverter on the App**, set the grid code for the inverter, and then set the off-grid mode and SmartGuard model for the inverter. For details, see **Method 2: Setting the Off-Grid Mode and SmartGuard Model for the Inverter**.

Step 5 (Optional) Connect to the inverter by referring to **A Connecting to the Inverter on the App**. Upgrade the M1 and MB0 inverters to the latest version. Otherwise, the SmartGuard may fail to identify the inverters. For details, see **B Upgrading the Inverter**.

Step 6 Check that the SmartGuard is running in off-grid mode. Observe the LED indicators on the inverter, ESS, EMMA, and SmartGuard to check the running status.

----End

Method 3: Power-On by Starting the Generator

Step 1 Manually start the generator. Use a multimeter to check that the AC voltage in the power distribution box is within the allowed range and that cables are correctly connected.

Step 2 Turn on the main circuit breaker on the grid side.

Step 3 Turn on the ESS switch.

1. (Optional) Remove the locking screw for the **DC SWITCH** of the ESS.
2. Set the **DC SWITCH** of the ESS to ON.

Step 4 Power on the inverter.

1. (Optional) Turn on the DC switch (if any) between the PV strings and the inverter.
2. (Optional) Remove the locking screw for the **DC SWITCH** of the inverter.
3. Set the **DC SWITCH** of the inverter to ON.

Step 5 Check that the SmartGuard is running in on-grid mode. Observe the LED indicators on the inverter, ESS, EMMA, and SmartGuard to check the running status.

----End

LED Indicators on the EMMA and SmartGuard

Table 6-2 EMMA indicator description

Indicator	Status	Description
Running status indicator	Off	The system is not powered on.
	Steady green	The system is powered on and running.
Alarm indicator	Off	No alarm is raised.
	Blinking red slowly (on for 1s and then off for 4s)	The system raises a warning alarm.

Indicator	Status	Description
	Blinking red fast (on for 0.5s and then off for 0.5s)	The system raises a minor alarm.
	Steady red	A critical or critical alarm is generated.
Communication status indicator	Off	The IP address of the management system server is not configured. (The indicator is off when the EMMA is not connected to the SmartPVMS.)
	Blinking green slowly (on for 1s and then off for 1s)	The communication with the management system is normal.
	Blinking green fast (on for 0.125s and then off for 0.125s)	The communication with the management system is interrupted.

Table 6-3 Indicators on the SmartGuard

Indicator	Status	Description
	Steady green	The SmartGuard is in on-grid mode.
	Blinking green slowly	The SmartGuard is in generator off-grid mode.
	Steady orange	The SmartGuard is in inverter off-grid mode.
	Steady red	(Device replacement) A hardware alarm is generated on the SmartGuard.
	Blinking red slowly	An environment alarm is generated on the SmartGuard.

6.3.2 Powering On Loads

Method 1: Power-On in On-Grid Mode and Power-On by Starting the Generator

Step 1 Check that the inverter, ESS, EMMA, and SmartGuard are working properly in on-grid mode.

Step 2 (Optional) Turn off switches for high-power home appliances to avoid generator overload.

Step 3 After checking that the residential load circuit is not short-circuited, turn on the backup load and non-backup load switches.

Step 4 (Optional) Set charger route parameters.

----End

Method 2: Power-On in Off-Grid Mode (with PV Strings)

Step 1 Check that the inverter, ESS, EMMA, and SmartGuard are working properly in off-grid mode.

Step 2 Check that the residential backup load power does not exceed the off-grid operating power of the inverter.

Step 3 After checking that the residential load circuit is not short-circuited, turn on the backup load and non-backup load switches.

----End

Method 3: Power-On in Off-Grid Mode (Without PV Strings)

Step 1 Check that the inverter, ESS, EMMA, and SmartGuard are working properly in off-grid mode.

Step 2 Check that the residential backup load power does not exceed the off-grid operating power of the inverter.

Step 3 (Optional) Turn off all backup load switches except the router switch to ensure that the battery SOC is sufficient for the device commissioning.

Step 4 After checking that the residential load circuit is not short-circuited, turn on the backup load and non-backup load switches.

----End

6.4 Device Commissioning

6.4.1 Deploying a New Plant

Deploying a New Plant

NOTE

- For details about new plant deployment and existing plant revamping, see **FusionSolar App Quick Guide (EMMA)** or scan the QR code.
- In the existing plant revamping scenario, the SmartGuard and Dongle cannot be used at the same time. You need to remove the Dongle from the inverter. The SmartGuard has a built-in power meter. If all loads are connected to the SmartGuard, the original power meter in the power plant needs to be directly removed. If some of loads are connected to the SmartGuard, a power meter of the recommended model must be used and its cables need to be reconnected. For details about the cable connections, see **5.9 Installing the SmartGuard Signal Cables (EMMA)**.
- For details about how to set ESS parameters, inverter parameters, and physical layout of optimizers, see *Residential Smart PV Solution Quick Guide (Three-Phase PV+ESS Scenario + SmartGuard Networking)*.
- Before device commissioning, ensure that the router is powered on.

Connection Test

Connection Test is supported in quick settings. You can perform this step to check whether the cable connections are correct, avoiding site visits for rectification.

Tap **Connection Test** and wait until the test is complete. If the test fails, rectify the fault in a timely manner.

 Copyright © Huawei Digital Power Technologies Co., Ltd.

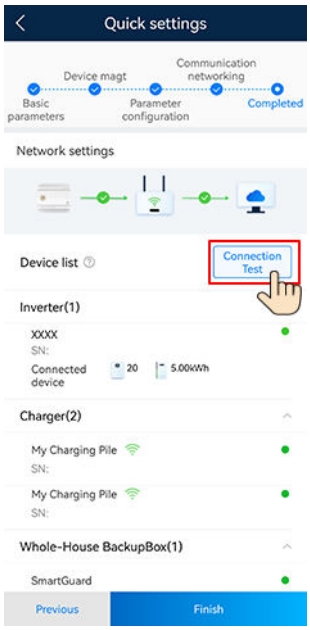

6.4.2 Commissioning Functions

Commission the following functions as needed:

Table 6-4 Commissioning functions

Function	Scenario Description	Procedure
Adding Intelligent Electrical Equipment	Intelligent electrical equipment (such as SG Ready heat pumps and electrical devices controlled by smart switches) in your home can be added to the FusionSolar app for management.	For details, see **FusionSolar App Quick Guide (EMMA)**, or scan the QR code to download the quick guide.
Limited Feed-in	If surplus PV power is fed into the grid, the parameter of limited feed-in power can be set to ensure that the feed-in power is within the range specified by the grid company.	
Scheduling via DI Port	Applies to scenarios where the grid company performs remote scheduling through dedicated ripple control receivers. The grid company remotely delivers a scheduling command (%) to the plant with a wireless transmitting apparatus. Then, the wireless receiving apparatus receives the scheduling command and converts it into a DI signal. The EMMA controls the inverter to output the corresponding power.	

 Copyright © Huawei Digital Power Technologies Co., Ltd.

Function	Scenario Description	Procedure
Peak Shaving	Applies to areas that have peak demand charges. The capacity control function allows you to lower the peak power drawn from grid in maximum self-consumption or TOU mode during peak hours, reducing electricity fees.	
Setting External WLAN Antenna Parameters	By default, the EMMA has a built-in WLAN antenna. If the signal quality of the power distribution box is poor, install an external antenna to enhance WLAN signals. If an external antenna is used, set the antenna in the built-in WLAN parameters to an external antenna.	

For details about app operations, see **FusionSolar App User Manual**.

6.4.3 Whole-House Power Backup Settings (Seamless Switchover)

Connect to the EMMA. On the home screen, choose **Set** > **Whole-House Power Backup Settings**, enable **Seamless switchover**, and set other parameters.

CAUTION

- The seamless switching function of the SmartGuard needs to be manually enabled. If the function is enabled, the system where an MAP0 inverter is installed will switch to off-grid mode within 20 ms after the grid fails or becomes abnormal, ensuring uninterruptible power supply to IT equipment such as computers connected to the backup load port.
- The seamless switching function of the SmartGuard can be used to switch from on-grid mode to off-grid mode or from off-grid mode to generator off-grid mode.

Table 6-5 Parameters for whole-house power backup settings

Parameter	Value Range	Description
Seamless switchover	Disabled (default)	• When the grid fails, loads will be powered off for a short while during on/off-grid switching. • The SmartGuard slowly switches to off-grid mode.

Parameter	Value Range	Description
	Enabled	• When the grid fails or is abnormal, the system where an MAP0 inverter is installed switches to off-grid mode within 20 ms. • When the grid fails or is abnormal, the system where an M1 or MB0 inverter is installed switches to off-grid mode within 100 ms. • The low voltage ride-through (LVRT) function does not take effect.
Consider Mains to Be Faulty If (optional)	• Open (default) • Closed	This parameter can be set only if an ATS is installed. • **Open**: When the grid is connected, the circuit for the position feedback signal upon grid connection has low impedance. When the grid is disconnected, the circuit has high impedance. • **Closed**: When the grid is connected, the circuit for the position feedback signal upon grid connection has high impedance. When the grid is disconnected, the circuit has low impedance.
Backup Time Warning Threshold (min)	5–60	Warning of battery backup time in off-grid scenarios.
Rated power (kW)	1–500	Indicates the rated power of the generator.
Max Output Power Ratio (%)	0–100	Indicates the maximum output power ratio of the generator.
Charge ESS with Generator	• Disabled (default) • Enabled	After this function is enabled, the generator is allowed to charge the ESS.

Figure 6-4 Whole-house power backup settings

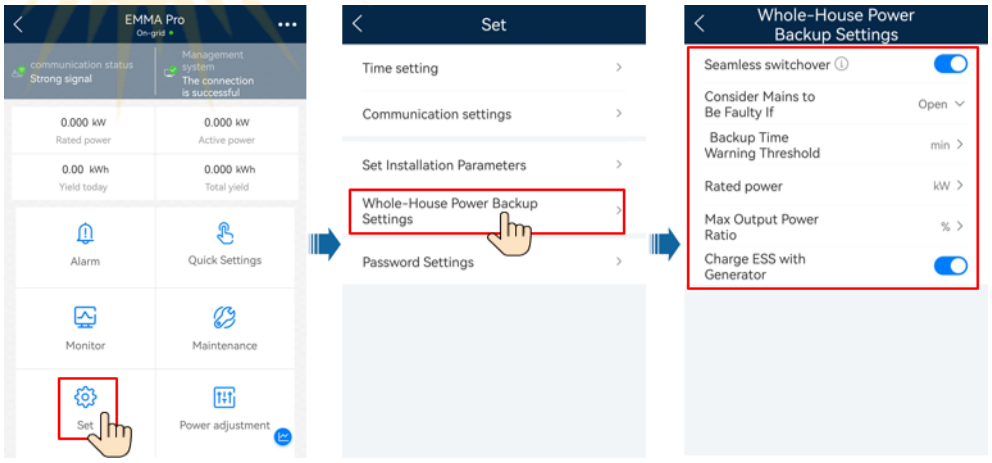

6.4.4 Setting Off-Grid Mode for the Inverter

After the off-grid mode is set, the inverter supports off-grid operation.

Method 1: Setting Off-Grid Mode for the Inverter Using the SmartGuard

Connect to the EMMA. On the home screen, choose **Monitor** > **SUN2000**, tap **Set**, and enable **Off-grid mode**.

Figure 6-5 Setting off-grid mode

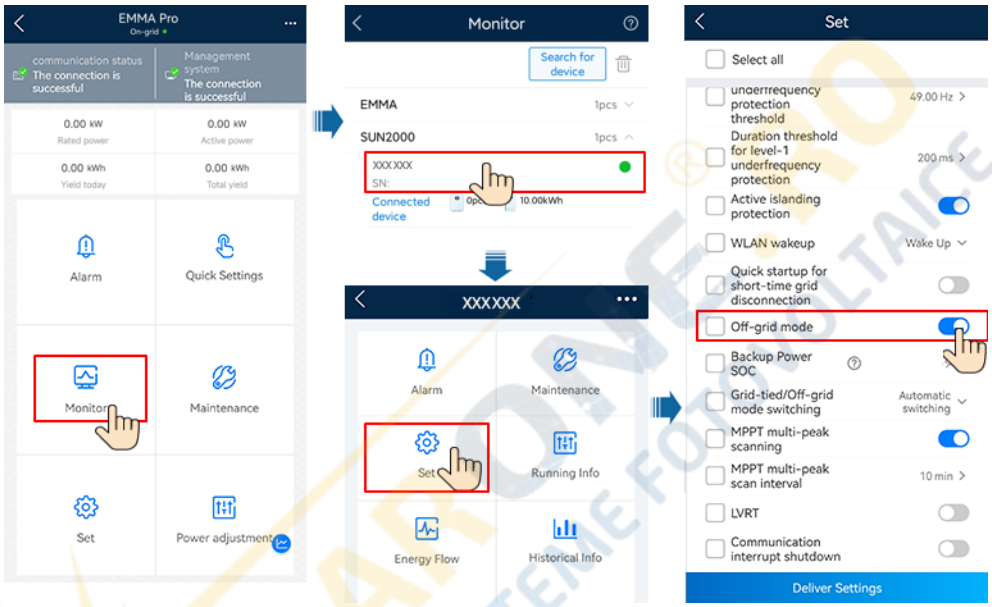

Method 2: Setting the Off-Grid Mode and SmartGuard Model for the Inverter

Connect to the inverter by referring to **A Connecting to the Inverter on the App**. On the home screen, choose **Set** > **Feature parameters** and enable **Off-grid mode**. SmartGuard must be selected when the system is powered on for the first time in off-grid mode. Otherwise, the system will not work.

Figure 6-6 Setting off-grid mode

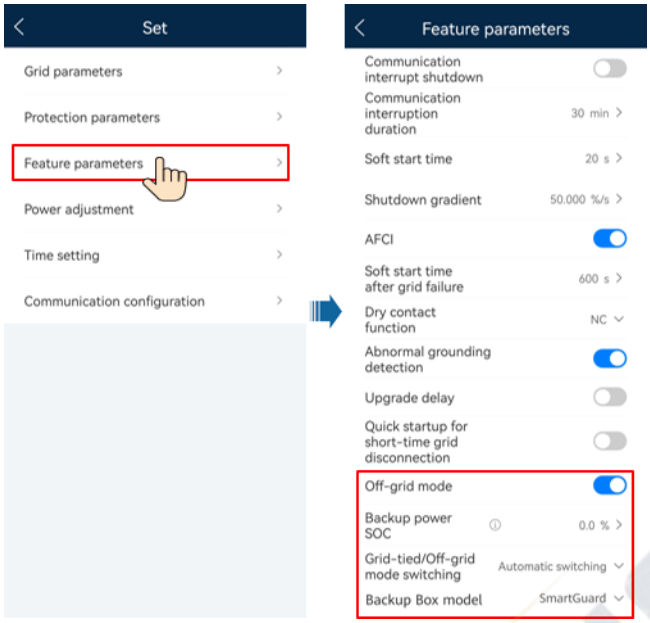

Table 6-6 On/Off-grid parameter settings

Parameter	Description	Value Range
Off-grid mode	If this parameter is enabled, the inverter switches to off-grid mode through the SmartGuard when the grid fails.	• Enabled • Disabled
Backup power SOC	Set the backup power SOC. In on-grid mode, the ESS does not discharge when it is discharged to the backup power SOC. When the grid fails, loads are powered in backup mode.	[0, 100%]
Backup Box model	SmartGuard must be selected when the system is powered on in off-grid mode. Otherwise, the system will not work.	• BackupBox-(B0,B1) • Compatible Third Party BackupBox • SmartGuard • No BackupBox

6.4.5 (Optional) Setting the External WLAN Antenna

CAUTION

An external WLAN antenna needs to be purchased from Huawei. To use the external WLAN antenna, set **Selected antenna** to **External signal**.

Connect to the EMMA. On the home screen, choose **Set** > **Communication settings** > **Inverter WLAN settings**, and select **Selected antenna** to **External**.

Figure 6-7 Setting the external antenna

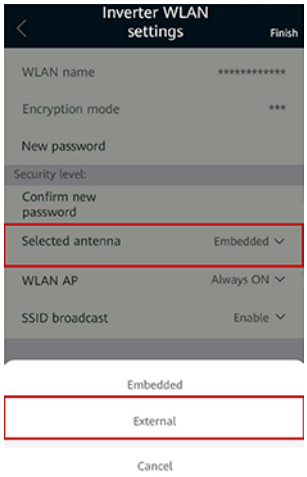

6.4.6 Generator Settings

Setting the Generator Control Mode

Connect to the EMMA. On the home screen, choose **Monitor** > **Generator** > **Maintenance**, and set the generator control mode.

Figure 6-8 Setting the generator control mode

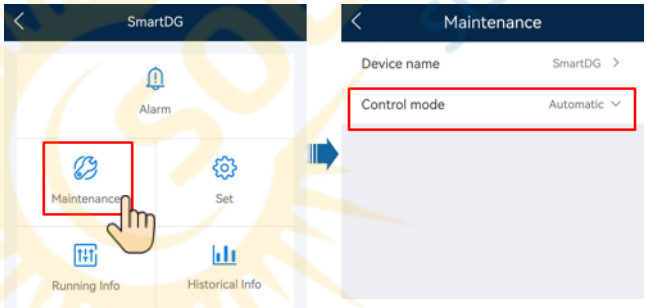

Table 6-7 Generator control parameters

Parameter	Value	Description
Control mode	Manual	• Shut Down • Power-on
	Automatic	You can set the battery SOC upper and lower thresholds. When the battery SOC reaches the specified upper or lower threshold, the generator automatically shuts down or starts.

Setting Generator Parameters

Connect to the EMMA. On the home screen, choose **Monitor** > **Generator** > **Set**, and set generator parameters.

Figure 6-9 Setting generator parameters

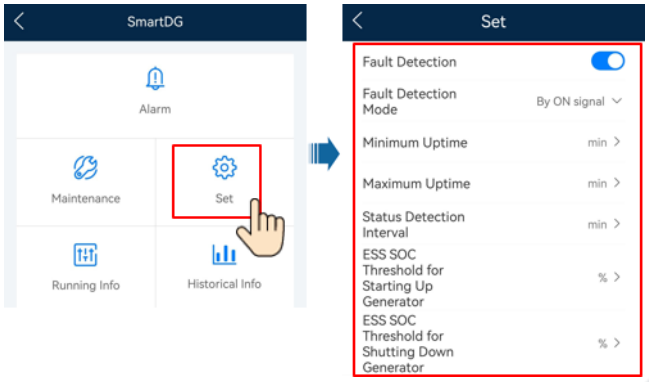

Table 6-8 Generator parameters

Parameter	Value Range	Description
Fault Detection	• Enabled • Disabled (default)	After **Fault Detection** is enabled, you need to set **Fault Detection Mode**.
Fault Detection Mode	• By ON signal (default) • By OFF signal	• **By ON signal**: When the generator fails to run, the generator alarm signal circuit has low impedance. When the generator is normal, the generator alarm signal circuit has high impedance. • **By OFF signal**: When the generator fails to run, the generator alarm signal circuit has high impedance. When the generator is normal, the generator alarm signal circuit has low impedance.
Minimum Uptime (min)	0–60	In auto control mode, the generator cannot automatically shut down if the specified minimum uptime is not reached.
Maximum Uptime (min)	60–2880	In auto control mode, the generator automatically shuts down upon reaching the specified maximum uptime.
Status Detection Interval (min)	1–10	After the generator startup or shutdown command is delivered, if the generator fails to start or shut down when **Status Detection Interval** is reached, a generator startup or shutdown failure alarm is reported.

Parameter	Value Range	Description
ESS SOC Threshold for Starting Up Generator (%)	0–30	When the battery SOC is lower than **ESS SOC Threshold for Starting Up Generator**, the generator starts. • Ensure that **ESS SOC Threshold for Starting Up Generator** is greater than or equal to 10% of **End-of-discharge SOC**. • If the generator startup fails, loads will be powered off after the ESS discharges to **End-of-discharge SOC**.
ESS SOC Threshold for Shutting Down Generator (%)	85–100	When the battery SOC is higher than **ESS SOC Threshold for Shutting Down Generator**, the generator shuts down.

6.5 On/Off-Grid Switching

6.5.1 Verifying On/Off-Grid Switching

After the system is powered on for the first time, verify the on/off-grid switching.

Method 1: On-Grid Operation Verification

Step 1 Check that the grid is available and the SmartGuard is running in on-grid mode.

Step 2 (Optional) Enable **Off-grid mode** for the inverter. For details, see method 2 in **6.4.4 Setting Off-Grid Mode for the Inverter**.

Step 3 Check that the residential backup load power does not exceed the off-grid operating power of the inverter.

Step 4 Switch to off-grid mode by referring to **6.5.2 Forced Switching**. Check whether the off-grid operation is normal and whether the indicator on the SmartGuard is steady orange.

Step 5 Switch to on-grid mode by referring to **6.5.2 Forced Switching**. If the indicator on the SmartGuard is steady green, the inverter is connected to the grid.

Step 6 If the plant is equipped with a generator, set the generator operation mode to remote.

Step 7 (Optional) Use the owner account to set smart appliances. For details, see **F Using Smart Appliances (Owner)**.

----End

Method 2: Off-Grid Operation Verification

Step 1 Check that the indicator on the SmartGuard is steady orange when the SmartGuard is off-grid due to a grid failure.

Step 2 After the grid recovers, turn on the main circuit breaker on the grid side and check whether the on-grid operation is normal and whether the indicator on the SmartGuard is steady green.

Step 3 If the plant is equipped with a generator, set the generator operation mode to remote.

Step 4 (Optional) Use the owner account to set smart appliances. For details, see **F Using Smart Appliances (Owner)**.

----End

Method 3: Generator Operation Verification

Step 1 (Optional) If the power grid fails, PV strings have no output, and the battery SOC is insufficient, enable **Charge ESS with Generator** and wait until the ESS is charged to 10% or higher of **End-of-discharge SOC**.

Step 2 Set the generator operation mode to remote.

NOTICE

If the generator operation mode is set to remote, the system will fail to start when the power grid fails, PV strings have no output, and the battery SOC becomes insufficient.

Step 3 (Optional) Tap **Power-on** on the FusionSolar app to start the generator. For details, see **Setting the Generator Control Mode**.

Step 4 (Optional) Tap **Shut Down** on the FusionSolar app to shut down the generator. For details, see **Setting the Generator Control Mode**.

----End

6.5.2 Forced Switching

Connect to the EMMA. On the home screen, choose **Monitor** > **SmartGuard** > **Maintenance** and switch based on the actual status.

- If you tap **Switch** when the system is in on-grid mode, the system forcibly switches to the off-grid mode. If the system is faulty or manually switched back to the on-grid mode, the system automatically exits the forced switching mode.
- If you tap **Switch** when the system is in off-grid mode, the system attempts to switch to the on-grid mode and automatically exits the forced switching mode.

Figure 6-10 Setting on/off-grid switching

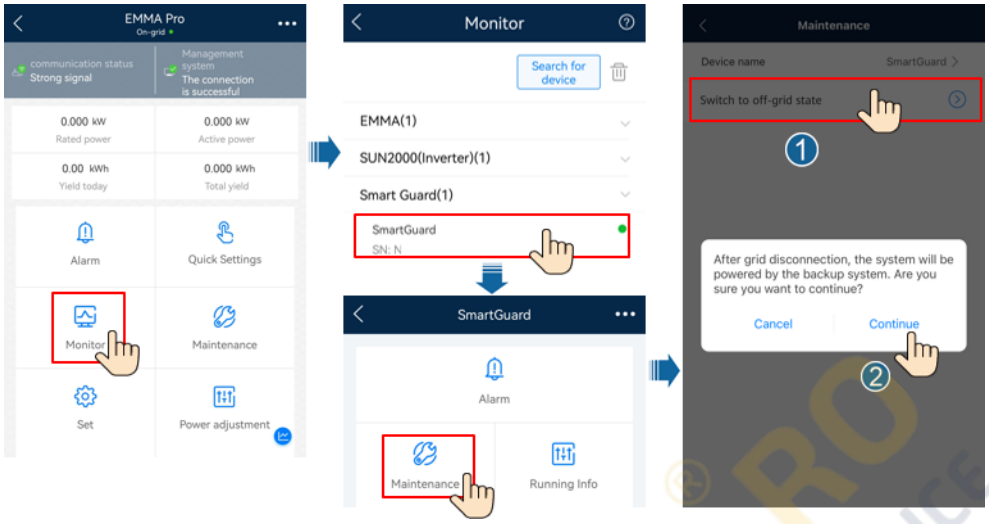

NOTE

- If switching to on-grid mode fails, the power grid may be abnormal or the grid connection conditions may not be met. Check and try again.
- If switching to off-grid mode fails, the load power may be too high or the backup load may be abnormal. Check and try again.

7 System Maintenance

7.1 System Power-Off

Precautions

WARNING

- Before opening the maintenance compartment door, turn off the main circuit breaker on the grid side, and then turn off the switches for residential backup loads and non-backup loads. Shut down the inverter, and turn off the DC switches of the inverter and ESS.
- Only authorized personnel can open the maintenance compartment cover to perform electrical connections.
- Before opening the maintenance compartment cover, turn off the backup load circuit breaker, grid AC circuit breaker, and two inverter AC circuit breakers inside the SmartGuard.
- After the SmartGuard powers off, the remaining electricity and heat may still cause electric shocks and burns. Therefore, wait for at least 5 minutes and wear insulated gloves before working on the SmartGuard.

Procedure

Step 1 Turn off the main circuit breaker on the grid side.

Step 2 Power off the inverter.

1. Send a shutdown command to the inverter on the app.
2. Set the **DC SWITCH** of the inverter to **OFF**.
3. (Optional) Install the locking screw for the **DC SWITCH**.
4. (Optional) Turn off the DC switch between the inverter and PV strings.

Step 3 Shut down the ESS.

1. Set the **DC SWITCH** of the ESS to **OFF**.
2. (Optional) Install the locking screw for the **DC SWITCH** of the ESS.

Step 4 (Optional) Shut down the generator. For details, see **Setting the Generator Control Mode**.

Step 5 Turn off the switches for residential backup loads and non-backup loads.

----End

7.2 Routine Maintenance

To ensure that the system operates properly for a long term, you are advised to perform routine maintenance as described in this section.

CAUTION

Before cleaning the system, connecting cables, and checking the grounding reliability, power off the system.

Table 7-1 Maintenance checklist

Check Item	Check Method	Maintenance Interval
System cleanliness	Check periodically that the SmartGuard is free from obstacles and dust.	Once every 6 to 12 months
System status	• Check that the SmartGuard is not damaged or deformed. • Check that the SmartGuard does not generate abnormal sound when it is in operation. • Check whether SmartGuard parameters are correctly set when the device is running.	Once every six months
Electrical connections	• Check whether cables are securely connected. • Check whether cables are damaged, especially whether the cable sheath that contacts a metal surface is damaged. • Unused AC input ports, COM ports, and waterproof covers on the SmartGuard are locked.	6 months after the first commissioning and once every 6 to 12 months after that

Check Item	Check Method	Maintenance Interval
Grounding reliability	Check whether the PE cable is securely connected.	6 months after the first commissioning and once every 6 to 12 months after that

7.3 Alarm Reference

For details, see **SmartGuard Alarm Reference**.

7.4 Operations on the Bypass Switch of the SmartGuard

Precautions

DANGER

- Do not operate the bypass switch during site deployment or normal use.
- When the grid is available but the SmartGuard is abnormal and cannot supply power to loads, check and clear the SmartGuard alarm. If the fault persists, consult the customer service personnel and then operate the bypass switch. Misoperations may cause electric shocks.

WARNING

- Before operating the bypass switch, power off the SmartGuard.
- Before opening the maintenance compartment door, turn off the main circuit breaker on the grid side, and then turn off the switches for residential backup loads and non-backup loads. Shut down the inverter, and turn off the DC switches of the inverter and ESS.
- Only authorized personnel can open the maintenance compartment cover to perform electrical connections.
- After the SmartGuard powers off, the remaining electricity and heat may still cause electric shocks and burns. Therefore, wait for at least 5 minutes and wear insulated gloves before working on the SmartGuard.

Procedure

Step 1 Check that the grid is available and the SmartGuard is abnormal and cannot supply power to loads.

Step 2 Power off the system. For details, see **7.1 System Power-Off**.

Step 3 Perform operations on the SmartGuard bypass switch.

1. Open the maintenance compartment door and turn off the four switches shown in the figure.

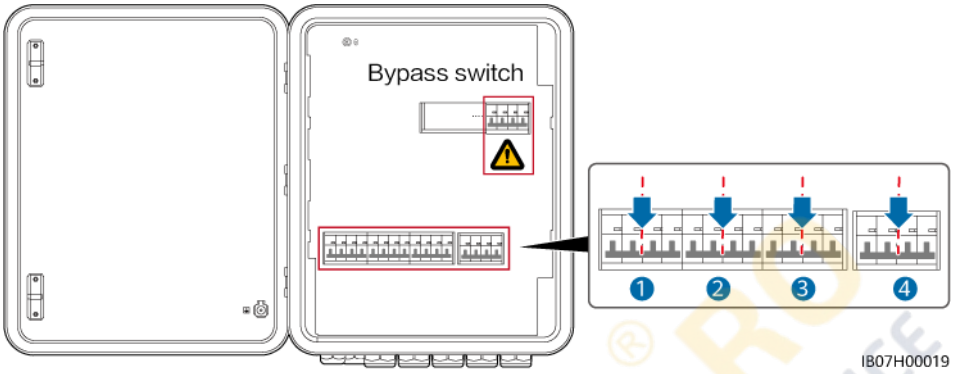

2. Remove the bypass switch latch, turn on the bypass switch, and then turn on switches 3 and 4 shown in the figure.

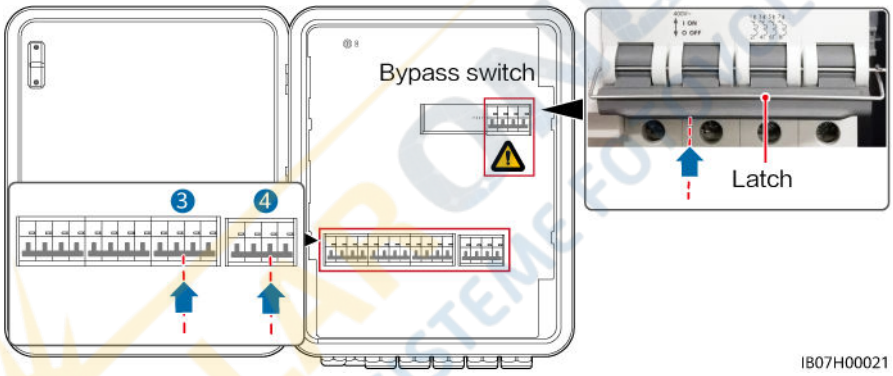

3. Close the maintenance compartment door.

Step 4 Turn on the main circuit breaker on the grid side. Turn on the switches for residential backup loads and non-backup loads.

----End

7.5 Replacing the SmartGuard

Precautions

DANGER

- Wear personal protective equipment and use dedicated insulated tools to avoid electric shocks or short circuits.

WARNING

- Before performing maintenance, power off the equipment, follow the instructions on the delayed discharge label, and wait for a period of time as specified to ensure that the equipment is not energized.
- Before opening the maintenance compartment door, turn off the main circuit breaker on the grid side, and then turn off the switches for residential backup loads and non-backup loads. Shut down the inverter, and turn off the DC switches of the inverter and ESS.
- Only authorized personnel can open the maintenance compartment cover to perform electrical connections.
- Before opening the maintenance compartment cover, turn off the backup load circuit breaker, grid AC circuit breaker, and two inverter AC circuit breakers inside the SmartGuard.
- After the SmartGuard powers off, the remaining electricity and heat may still cause electric shocks and burns. Therefore, wait for at least 5 minutes and wear insulated gloves before working on the SmartGuard.

Procedure

Step 1 Power off the system. For details, see **7.1 System Power-Off**.

Step 2 Open the maintenance compartment door, and turn off the backup load circuit breaker, grid AC circuit breaker, and two inverter AC circuit breakers inside the SmartGuard.

Step 3 Remove all electrical connections from the SmartGuard.

Step 4 Unscrew the SmartGuard from the mounting bracket.

Step 5 Install a new SmartGuard. For details, see **4 System Installation**.

Step 6 Perform electrical connections. For details, see **5 Electrical Connections**.

Step 7 Commission the SmartGuard. For details, see **6 System Commissioning**.

----End

8 Technical Specifications

Technical Specifications

Item	SmartGuard-63A-T0	SmartGuard-63A-AUT0
Inverter port current	60 A	
Current of the backup load port	63 A	
Current of the non-backup load port	63 A	
Grid port current	63 A	
Rated AC voltage	380/400/415 V, 220/230/240 V, L1/L2/L3/N+PE	
Startup mode	Started on the grid/generator side or on the inverter side	
Working modes	On-grid, off-grid, and generator	
LVRT	Supported	
On/Off-grid switchover control	Automatic or forced	
On/Off-grid switchover time (seamless switchover)	• < 20 ms (MAP0) • < 100 ms (M1, MB0)	
Home energy management system (EMMA)	Available	
Remote generator startup	Automatic or manual	
Generator DO port	1–100 mA, ≤ 24 V	
Bypass mode	Manual	

Display and Communication

Item	SmartGuard-63A-T0	SmartGuard-63A-AUT0
Display	LED indicators; WLAN+App	
RS485	Supported	
Built-in WLAN	Supported	

General Specifications

Item	SmartGuard-63A-T0	SmartGuard-63A-AUT0
Weight	≤ 17 kg	
Dimensions (W x H x D)	600 mm x 490 mm x 170 mm	
Noise	< 29 dB	
Cooling mode	Natural cooling	
Maximum operating altitude	4000 m (derated when the altitude is greater than 2000 m)	
Operating temperature	–25°C to +50°C	
IP rating	IP55	

NOTE

- On-grid mode: The ambient temperature ranges from –25°C to +30°C, and the long-term steady-state current is not derated. When the temperature ranges from 30°C to 40°C, the current is linearly derated from 63 A to 53 A. When the temperature ranges from 40°C to 50°C, the current is linearly derated from 53 A to 43 A (three-phase balanced load and PF = 1).
- Off-grid mode (MAP0): When the ambient temperature ranges from –25°C to +30°C, the long-term steady-state current is not derated. When the temperature ranges from 40°C to 50°C, the current is linearly derated from 60 A to 50 A (non-three-phase balanced load and PF ≥ 0.8).
- Off-grid mode (M1 and MB0): When the ambient temperature ranges from –25°C to +40°C, the long-term steady-state current is not derated.

Wireless Communication Specifications

Item	WLAN
Frequency	2400–2483.5 MHz
Protocol standard	WLAN 802.11b/g/n
Bandwidth	≤ 20 MHz

Item	WLAN
Maximum transmit power	≤ 20 dBm E.I.R.P

External WLAN Antenna Specifications

Item	WLAN
Frequency	2400–2483.5 MHz
Gain	≤ 4 dBi
Port	RP-SMA-J reverse-polarity male connector (with inner threads and inner holes)
Mounting mode	By magnet
Cable length	2 m

SOLARONE.RO SISTEME FOTOVOLTAICE

A Connecting to the Inverter on the App

Step 1 Access the **Commission Device** screen.

Figure A-1 Method 1: before login (not connected to the Internet)

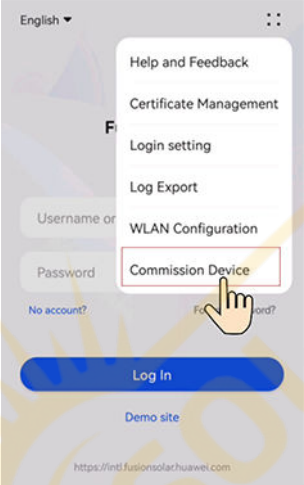

Figure A-2 Method 2: after login (connected to the Internet)

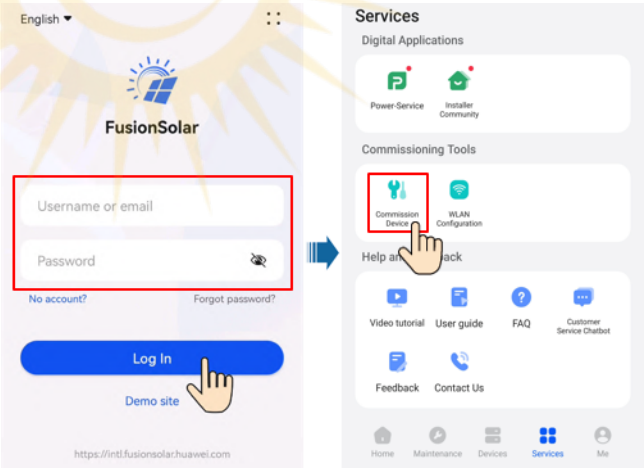

Step 2 Connect to the inverter WLAN, log in as **Installer**, and access the device commissioning screen.

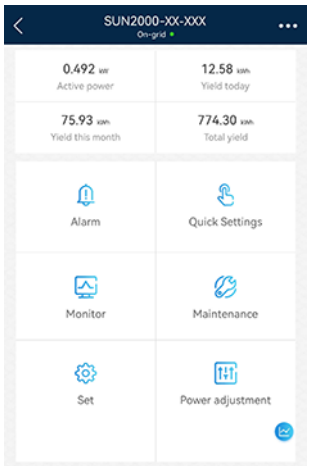

NOTICE

- When directly connecting your phone to a device, ensure that your phone is within the WLAN coverage of the device.
- When connecting the device to the router over WLAN, ensure that the device is within the WLAN coverage of the router and the signal is stable and good.
- The router supports WLAN (IEEE 802.11 b/g/n, 2.4 GHz) and the WLAN signal reaches the inverter.
- The WPA, WPA2, or WPA/WPA2 encryption mode is recommended for routers. The Enterprise mode is not supported (such as airport WLAN and other public hotspots that require authentication). WEP and WPA TKIP are not recommended because they have serious security vulnerabilities. If the access fails in WEP mode, log in to the router and change the encryption mode of the router to WPA2 or WPA/WPA2.

NOTE

- The last six digits of the product WLAN name are the same as the last six digits of the product SN.
- For the first connection, log in with the initial password. You can obtain the initial password from the label on the device.
- To ensure account security, protect the password by changing it periodically, and keep it secure. Your password might be stolen or cracked if it is left unchanged for extended periods. If a password is lost, devices cannot be accessed. In these cases, the Company shall not be liable for any loss.
- If the login screen is not displayed after you scan the QR code, check whether your phone is correctly connected to the device WLAN. If not, manually select and connect to the WLAN.
- If the **This WLAN network has no Internet access. Connect anyway?** message is displayed when you connect to the built-in WLAN, tap **CONNECT**. Otherwise, you cannot log in to the system. The actual UI and messages may vary with mobile phones.

----End

 Copyright © Huawei Digital Power Technologies Co., Ltd.

B Upgrading the Inverter

NOTE

If the phone is not connected to a network, prepare the upgrade package before upgrading the inverter.

Connect to the inverter, choose **Maintenance** > **Upgrade** on the home screen, and select the corresponding inverter version.

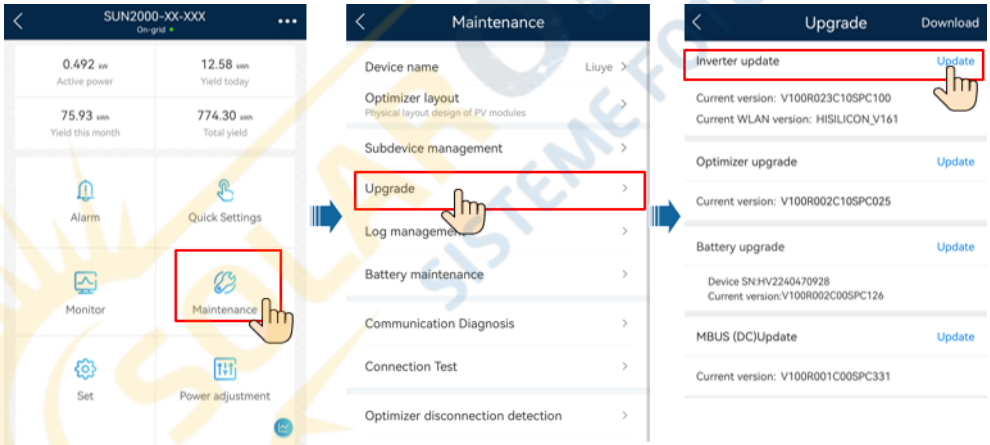

C Connecting to the EMMA on the App

Step 1 Access the **Commission Device** screen.

Figure C-1 Method 1: before login (not connected to the Internet)

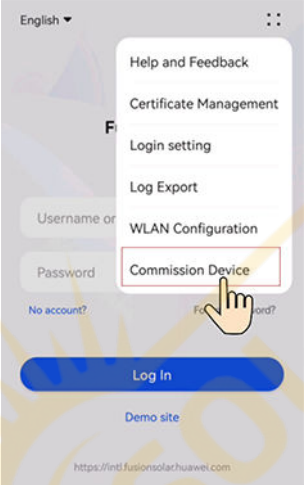

Figure C-2 Method 2: after login (connected to the Internet)

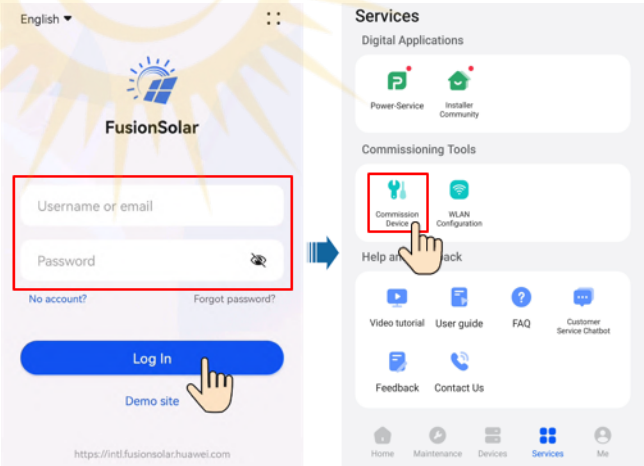

Step 2 Connect to the EMMA WLAN, log in as **Installer**, and access the device commissioning screen.

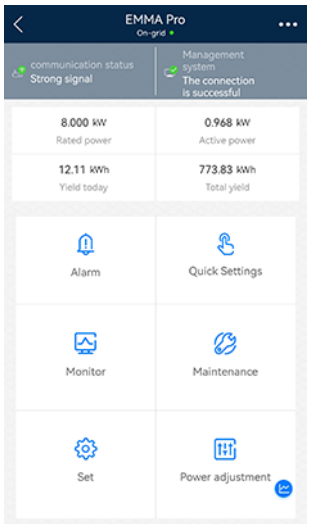

NOTICE

- When directly connecting your phone to a device, ensure that your phone is within the WLAN coverage of the device.
- When connecting the device to the router over WLAN, ensure that the device is within the WLAN coverage of the router and the signal is stable and good.
- The router supports WLAN (IEEE 802.11 b/g/n, 2.4 GHz) and the WLAN signal reaches the inverter.
- The WPA, WPA2, or WPA/WPA2 encryption mode is recommended for routers. The Enterprise mode is not supported (such as airport WLAN and other public hotspots that require authentication). WEP and WPA TKIP are not recommended because they have serious security vulnerabilities. If the access fails in WEP mode, log in to the router and change the encryption mode of the router to WPA2 or WPA/WPA2.

NOTE

- The last six digits of the product WLAN name are the same as the last six digits of the product SN.
- For the first connection, log in with the initial password. You can obtain the initial password from the label on the device.
- To ensure account security, protect the password by changing it periodically, and keep it secure. Your password might be stolen or cracked if it is left unchanged for extended periods. If a password is lost, devices cannot be accessed. In these cases, the Company shall not be liable for any loss.
- If the login screen is not displayed after you scan the QR code, check whether your phone is correctly connected to the device WLAN. If not, manually select and connect to the WLAN.
- If the **This WLAN network has no Internet access. Connect anyway?** message is displayed when you connect to the built-in WLAN, tap **CONNECT**. Otherwise, you cannot log in to the system. The actual UI and messages may vary with mobile phones.

----End

D ATS Parameter Requirements

NOTE

When the ATS is working, it consumes electric energy, which cannot be measured by the EMMA. As a result, the control accuracy of limited feed-in is affected.

Item	Specifications	Description
ATS pole quantity	• SmartGuard-63A-T0: 4-pole • SmartGuard-63A-AUT0: 3-pole/4-pole	If the SmartGuard-63A-AUT0 uses a 4-pole ATS, external cable connection is required to ensure that the neutral wire is not disconnected or the ATS does not disconnect the neutral wire.
Switching mode	Automatic	The ATS automatically switches between the grid and the generator as required.
Operating mode	• Automatic • Manual	The SmartGuard requires that the ATS work in automatic mode. The ATS works in manual mode only for system maintenance.
Rated current	• When the rated current of the generator is greater than the current of the main circuit breaker, the rated current of the ATS is greater than or equal to the rated current of the generator. • When the rated current of the generator is less than the current of the main circuit breaker, the rated current of the ATS is greater than or equal to the current of the main circuit breaker.	Select cables based on the actual current.
Operating voltage	380/400/415 V, 220/230/240 V	The operating voltage range of the ATS may affect the HVRT and undervoltage protection functions of the system.

Item	Specifications	Description
Switching time	• If the seamless switching function of the SmartGuard is enabled, the switching time of the ATS shall be greater than or equal to 500 ms • If the seamless switching function of the SmartGuard is disabled, the switching time of the ATS shall be greater than or equal to 5s.	The time for switching between the generator and the grid must not fall below the lower limit; otherwise, the devices in the system will be affected.
Startup delay	Recommended value: ≤ 1 min	The duration from the time when the generator receives the startup signal to the time when the AC output of the generator becomes stable plus the ATS successful switching time shall be less than 5 min (this is the default value. The actual value can be a larger one.)
Power-off status	Hold	When the ATS is powered off, the AC circuit and feedback connection position signal of the ATS must remain in the working state before the power failure. Otherwise, the LVRT function of the system will be affected.
Position feedback signal upon grid connection	• The ATS port for the position feedback signal upon grid connection must be a passive port that works with an external circuit and can work at a current of less than or equal to 0.7 mA@12 V. • The low impedance of the circuit for the position feedback signal upon grid connection is less than or equal to 100 ohms. • The delay between the position feedback signal upon grid connection and the grid connection is within ±100 ms.	1. When the grid is connected, the circuit for the position feedback signal upon grid connection has low impedance. When the grid is disconnected, the circuit has high impedance. The grid availability status corresponding to high impedance and low impedance can be set on the FusionSolar app. For details about how to set the grid exception detection mode, see **Table 6-5**. 2. The port for the position feedback signal upon grid connection must be a passive port. If an active port is used, the SmartGuard may be damaged, which is not covered under the warranty. 3. Enhanced insulation design is required between the ATS signal port and the AC circuit.

Figure D-1 Position feedback signal upon grid connection

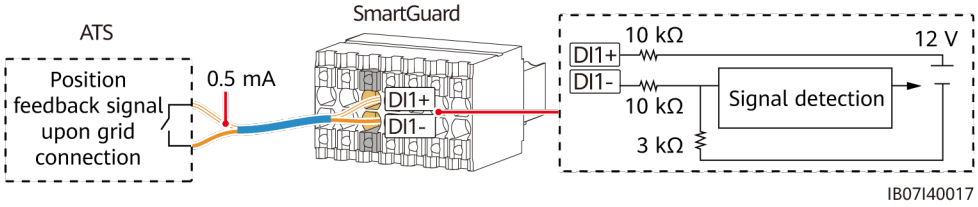

E Generator Parameter Requirements

Item	Specifications	Description
Operating mode	• Remote • Manual	The SmartGuard requires that the generator work in remote mode. The manual mode of the generator is used only when the generator is powered on for the first time.
Operating voltage	380/400/415 V, 220/230/240 V, L1/L2/L3/N, 50 Hz/60 Hz	Both three-phase unbalanced loads and single-phase loads can be connected.
Startup delay	Recommended value: ≤ 4 min	The duration from the time when the generator receives the startup signal to the time when the AC output of the generator becomes stable plus the ATS successful switching time shall be less than 5 min (this is the default value. The actual value can be a larger one.)
Generator grounding	-	The neutral wire of the generator must be grounded. Otherwise, the SmartGuard will report a generator grounding exception alarm.
Generator control signal	The port on the generator side must be an active port. After the port is connected to the signal circuit of the SmartGuard, the circuit current ranges from 1 mA to 100 mA, and the voltage is less than or equal to 24 V.	1. The SmartGuard can remotely start or shut down the generator through the port on the generator side. 2. The port on the SmartGuard side must be a passive port. When the circuit impedance is high, the generator starts. When the circuit impedance is high, the generator shuts down. 3. If the voltage of the port on the generator side or the circuit current is too high, the SmartGuard may be damaged, which is not covered under the warranty. If the current is too low, the internal circuit of the SmartGuard may work abnormally. 4. Enhanced insulation design is required between the port on the generator side and the AC circuit of the generator.

 Copyright © Huawei Digital Power Technologies Co., Ltd.

Item	Specifications	Description
Generator alarm signal (optional)	• The port on the generator side must be a passive port that works with an external circuit and can work at a current of less than or equal to 0.7 mA@12 V. • The low impedance for triggering the generator alarm signal is less than or equal to 100 ohms.	1. If the generator fails to work, the generator alarm signal circuit has low impedance by default. When the generator is normal, the generator alarm signal circuit has high impedance. High impedance and low impedance corresponding to the generator status (faulty and normal) can be set on the FusionSolar app. For details about how to set the fault detection mode, see **Table 6-8**. 2. The port on the generator side must be a passive port. If an active port is used, the SmartGuard may be damaged, which is not covered under the warranty 3. Enhanced insulation design is required between the port on the generator side and the AC circuit of the generator.

Figure E-1 Generator control signal

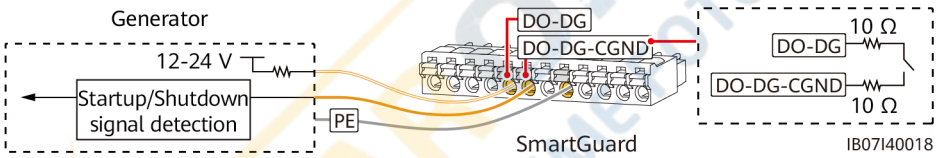

Figure E-2 Generator alarm signal

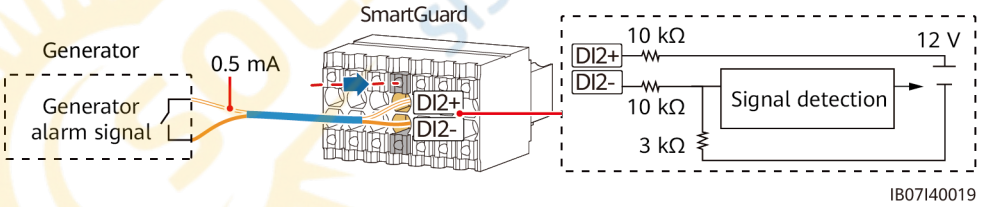

 Copyright © Huawei Digital Power Technologies Co., Ltd.

F Using Smart Appliances (Owner)

F.1 Commissioning the Charger

Log in to the FusionSolar app as an owner, tap the charger on the **Home** screen, and set charger parameters. For details about how to use the charger, go to **Help and Feedback**.

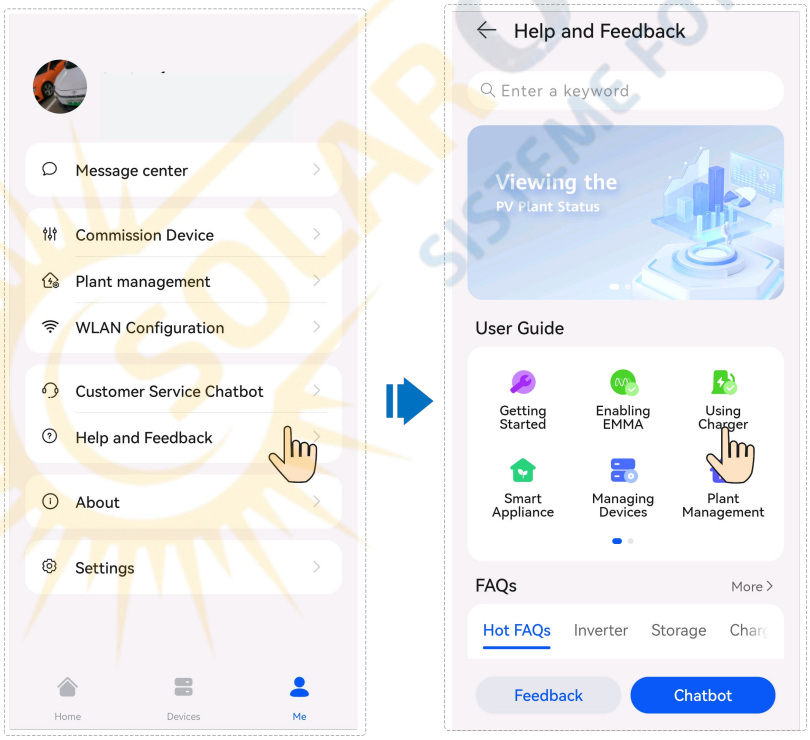

F.2 Smart Switch Commissioning

NOTE

If functions related to PV power control, such as PV power preferred, are involved, you are advised to configure smart appliances with the rated power greater than 100 W.

NOTE

EMMA V100R023C10 (V100R023C10SPCXX) supports only the Shelly versions listed in the following table. To check the Shelly version, perform the following steps:

1. Power on Shelly and connect to the WLAN of Shelly.

2. Enter the IP address for connecting to Shelly in the address box of the browser to check the firmware version of Shelly. For details, see the Shelly user manual.

Table F-1 Supported Shelly versions

Type	Model	Version
Smart socket	Shelly Plus Plug S	0.12.99-plugsprod1, 0.14.4, 1.0.8, 1.1.0-beta3
Smart relay	Shelly Plus 2PM	0.10.2-beta4, 1.0.8, 1.1.0-beta3
Smart circuit breaker	Shelly Pro 2PM	0.10.2-beta1, 1.0.3, 1.0.8, 1.1.0-beta3

Appliance Settings

NOTE

- The smart switches can work properly only when there are stable WLAN signals. If the signals are unstable, the switches may fail to connect to WLAN or frequently go offline. Different brands of smart switches may have different WLAN requirements. For details, see the product manuals or contact your supplier.
- Before the installation, ensure that the home router can cover the position of the smart switches with stable network connection, and perform the commissioning and verification.

1. Connect a smart switch to the same router as the EMMA. For details, see the quick guide delivered with the smart switch.

2. Open the FusionSolar app, choose **Devices** > **Appliances**, add the smart switch, and set the parameters such as the PV power parameters and power consumption priorities.

NOTE

In the SmartGuard networking scenario, **Off-grid Load Control** does not take effect for smart appliances connected to non-backup power ports.

Connecting to Multiple Smart Switches

To avoid confusion when multiple smart switches are powered on at the same time, power on and commission them one by one.

For example, if two smart circuit breakers (Shelly Pro 2PM) are installed in the living room, perform the following steps:

1. When installing the smart circuit breakers, record their positions by taking photos and notes, and number them.

Table F-2 Recording the names of the smart switches

Shelly Pro 2PM	Shelly Pro 2PM
Living room 1	Living room 2

2. Power on the smart circuit breaker "Living room 1," search for it in the Shelly app, and connect it to the router.
3. Log in to the FusionSolar app as an owner, search for it, and change its name. Bind it to the corresponding load based on the actual cable connection.

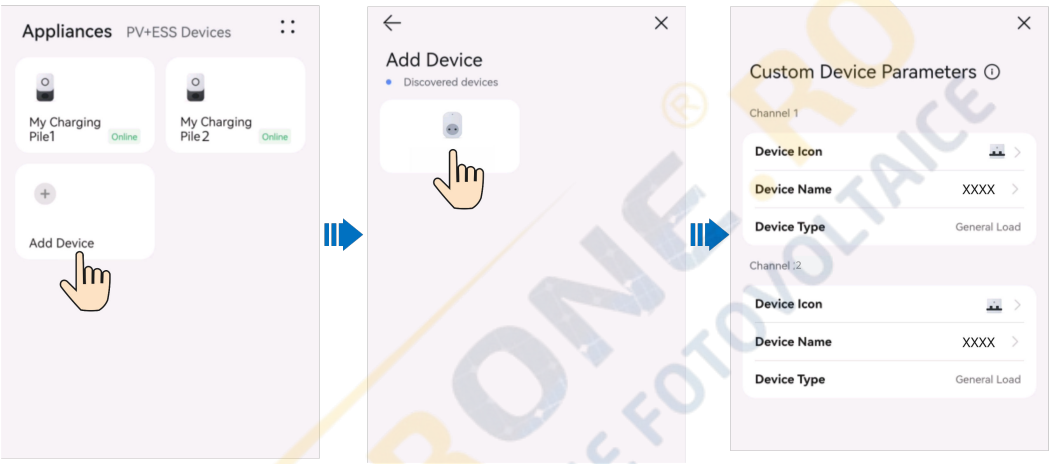

4. Repeat steps 2 and 3 to power on and commission the smart circuit breaker "Living room 2."

NOTE

If multiple smart switches have been powered on without records in advance, you can power them on or off on the Shelly app to distinguish them.

F.3 Generator Settings

Log in to the FusionSolar app using an owner account. On the **Home** screen, choose **PV+ESS Devices** > **Device** > **Generator**, and set parameters in **Generator Control** and **Parameter settings**.

 Copyright © Huawei Digital Power Technologies Co., Ltd.

Figure F-1 Generator control settings

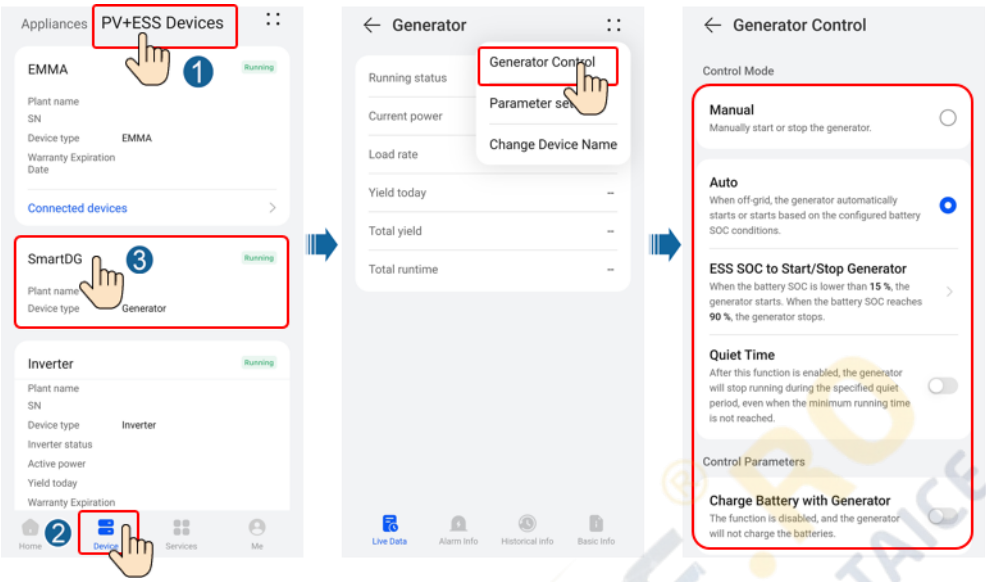

Table F-3 Generator control parameters

Parameter	Value Range		Description
Control mode	Manual		• Shut Down • Power-on
	Auto	ESS SOC to Start/Stop Generator	You can set the battery SOC upper and lower thresholds. When the battery SOC reaches the specified upper or lower threshold, the generator automatically shuts down or starts.
		Quiet Time	After this function is enabled, the generator will stop running during the specified quiet period, even when the minimum running time is not reached.
Charge Battery with Generator	• Disabled (default) • Enabled		After this function is enabled, the generator is allowed to charge the ESS.

Figure F-2 Generator parameter settings

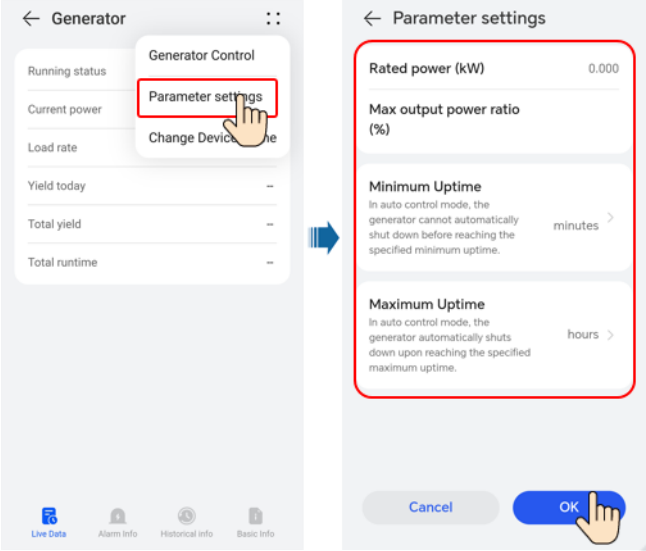

Table F-4 Generator parameters

Parameter	Value Range	Description
Rated power (kW)	1–500	Indicates the rated power of the generator.
Max output power ratio (%)	0–100	Indicates the maximum output power ratio of the generator.
Minimum Uptime (min)	0–60	In auto control mode, the generator cannot automatically shut down if the specified minimum uptime is not reached.
Maximum Uptime (min)	60–2880	In auto control mode, the generator automatically shuts down upon reaching the specified maximum uptime.

F.4 Forced Switching for the SmartGuard

Log in to the FusionSolar app using an owner account. On the **Home** screen, choose **Device** > **Plant Settings**, and switch the working mode as required.

- If you tap **Switch** when the system is in on-grid mode, the system forcibly switches to the off-grid mode. If the system is faulty or manually switched back to the on-grid mode, the system automatically exits the forced switching mode.
- If you tap **Switch** when the system is in off-grid mode, the system attempts to switch to the on-grid mode and automatically exits the forced switching mode.

 Copyright © Huawei Digital Power Technologies Co., Ltd.

Figure F-3 Forced switching

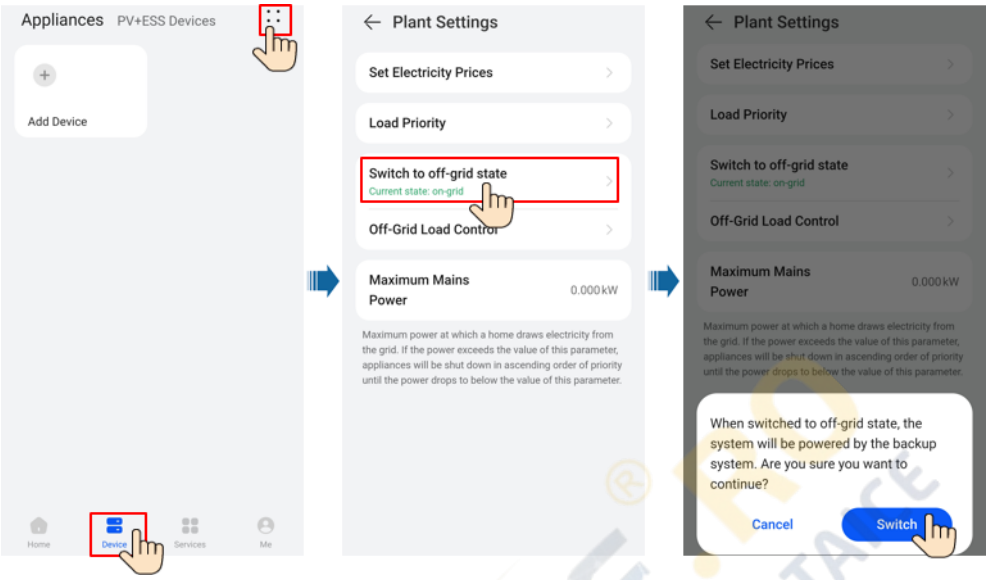

G Contact Information

If you have any questions about this product, please contact us.

https://digitalpower.huawei.com

Path: **About Us** > **Contact Us** > **Service Hotlines**

To ensure faster and better services, we kindly request your assistance in providing the following information:

- Model
- Serial number (SN)
- Software version
- Alarm ID or name
- Brief description of the fault symptom

 Copyright © Huawei Digital Power Technologies Co., Ltd.

NOTE

EU Representative Information: Huawei Technologies Hungary Kft.
Add.: HU-1133 Budapest, Váci út 116-118., 1. Building, 6. floor.
Email: hungary.reception@huawei.com

SOLARONE.RO® SISTEME FOTOVOLTAICE

H Digital Power Customer Service

https://digitalpower.huawei.com/robotchat/

 Copyright © Huawei Digital Power Technologies Co., Ltd.

I Preconfigured Certificate Disclaimer

The Huawei-issued certificates preconfigured on Huawei devices during manufacturing are mandatory identity credentials for Huawei devices. The disclaimer statements for using the certificates are as follows:

1. Preconfigured Huawei-issued certificates are used only in the deployment phase, for establishing initial security channels between devices and the customer's network. Huawei does not promise or guarantee the security of preconfigured certificates.
2. The customer shall bear consequences of all security risks and security incidents arising from using preconfigured Huawei-issued certificates as service certificates.
3. A preconfigured Huawei-issued certificate is valid from the manufacturing date until December 29, 2099.
4. Services using a preconfigured Huawei-issued certificate will be interrupted when the certificate expires.
5. It is recommended that customers deploy a PKI system to issue certificates for devices and software on the live network and manage the lifecycle of the certificates. To ensure security, certificates with short validity periods are recommended.

NOTE

You can view the validity period of a preconfigured certificate on the network management system.

 Copyright © Huawei Digital Power Technologies Co., Ltd.

J Acronyms and Abbreviations

A	
AC	alternating current
APP	application
ATS	auto transfer switching
C	
COM	communication
D	
DI	digital input
DO	digital output
E	
ETH	Ethernet
G	
GE	gigabit Ethernet

SOLARONE.RO SISTEME FOTOVOLTAICE

L

LAN	local area network
LED	light-emitting diode

N

NC	normally closed
NO	normally open

P

POE	power over Ethernet
PE	protective earthing

R

RST	reset
RH	relative humidity

S

SOC	state of charge
SOH	state of health
SN	serial number

W

WAN	wide area network

SOLARONE.RO SISTEME FOTOVOLTAICE